REVISION #	DATE:	DESCRIPTION AND SHEET NO.:	APPROVED BY:	DATE:

REGISTERED PROFESSIONAL ENGINEER
NATHAN J. DONNELLY
No. 64459
Exp. 6/30/17
CIVIL
STATE OF CALIFORNIA

INDEX OF SHEETS

SHEET NO.	TITLE
1	TITLE SHEET
	TYPICAL SECTIONS
	SURVEY CONTROL
	KEY MAP
	ENVIRONMENTALLY SENSITIVE AREA PLAN
	LAYOUTS
	PROFILES AND SUPERELEVATION DIAGRAM
	REMOVAL PLANS
	CONSTRUCTION DETAILS
	EROSION CONTROL PLANS
	CONTOUR GRADING PLANS AND DETAILS
	DRAINAGE PLANS, PROFILES, DETAILS AND QUANTITIES
	UTILITY PLANS AND DETAILS
	CONSTRUCTION AREA SIGNS
	MOTORIST INFORMATION PLANS
	STAGE CONSTRUCTION PLANS
	TRAFFIC HANDLING PLANS AND QUANTITIES
	PAVEMENT DELINEATION PLANS AND QUANTITIES
	SIGN PLANS AND QUANTITIES
	SUMMARY OF QUANTITIES
	PARK PLANS AND DETAILS
	RESTORATION PLAN
	HARDSCAPE PLANS
	LANDSCAPE PLANS
	TRAFFIC SIGNAL PLANS
	STREET AND BRIDGE LIGHTING PLANS
STRUCTURE PLANS	
	STRUCTURE REMOVAL PLANS
	SECOND STREET UNDERCROSSING
	5TH STREET BRIDGE
	RETAINING WALL PLANS

DEPARTMENT OF PUBLIC WORKS
CITY OF YUBA CITY

PROJECT PLANS FOR CONSTRUCTION OF IMPROVEMENTS

IN SUTTER and YUBA COUNTIES FOR

5TH STREET BRIDGE REPLACEMENT PROJECT

To be supplemented by California Department of Transportation Standard Plans dated 2015, City of Yuba City Standard Details dated 2009, and City of Marysville Standard Details dated XXXX.

90% PROGRESS PRINT
NOT FOR CONSTRUCTION

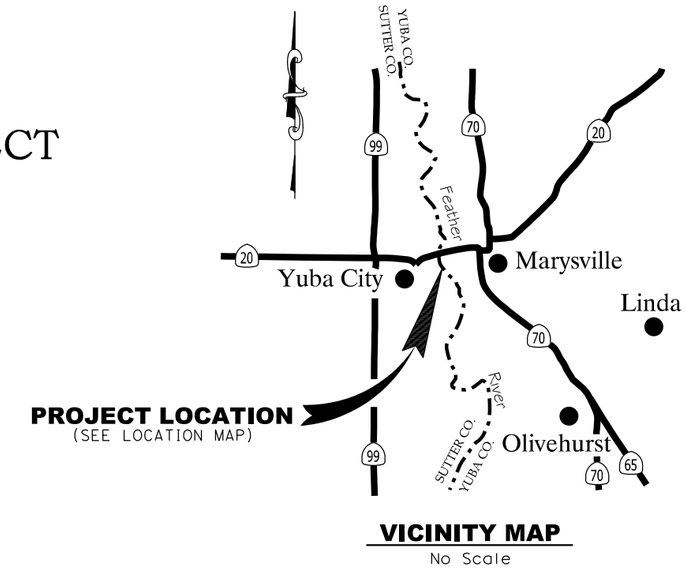

PROJECT LOCATION
(SEE LOCATION MAP)

VICINITY MAP
No Scale

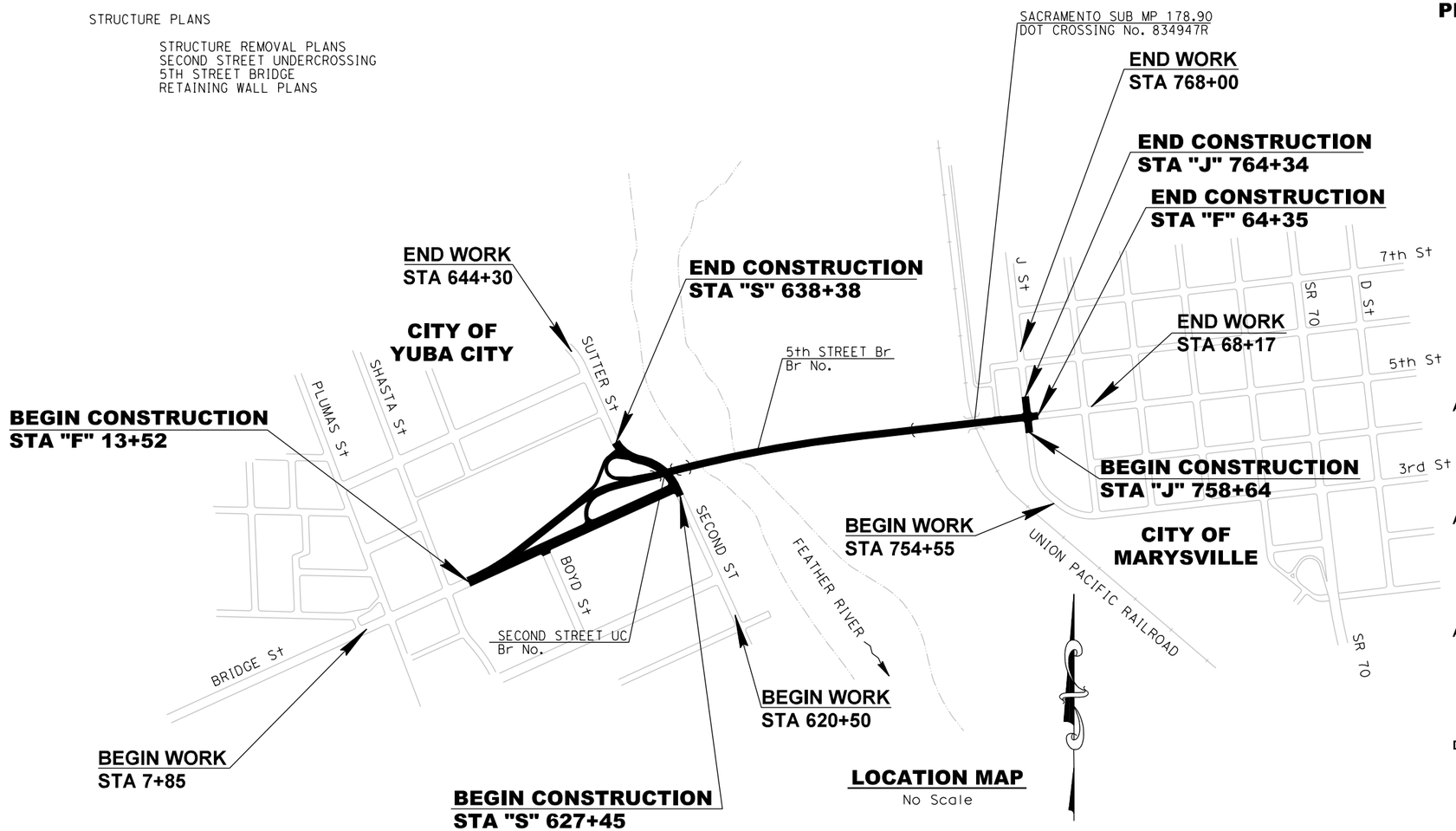

LOCATION MAP
No Scale

FOR REDUCED PLANS ORIGINAL SCALE IS IN INCHES 0 1 2 3

ALL DIMENSIONS SHOWN IN FEET UNLESS OTHERWISE NOTED

TERREL LOCKE
CITY CLERK
CITY OF YUBA CITY
DATE:

APPROVED BY:
JOHN BUCKLAND
MAYOR
CITY OF YUBA CITY
DATE:

APPROVED BY:
DIANA LANGLEY, P.E.
CITY ENGINEER
CITY OF YUBA CITY
RCE 59616 EXP 12-31-15
DATE:

APPROVED BY:
JAMES MATTHEWS
FIRE MARSHAL
CITY OF YUBA CITY
DATE:

DESIGNED BY:
NATHAN DONNELLY, P.E.
DOKKEN ENGINEERING
RCE 64459 EXP 06-30-17
DATE:

CONTRACT No. 17-XX

PLAN SCALE: AS SHOWN
PROFILE SCALE:
HORIZ:
VERT:

CONTRACT NO: 17-XX
DESIGNED: N. DONNELLY
DRAWN: A. LEE
CHECKED:
RECORD DRAWING:
DATE:

DOKKEN ENGINEERING
110 BLUE RAVINE ROAD #200
FOLSOM, CA 95630
PHONE: (916) 858-0642
FAX: (916) 858-0643

CITY OF YUBA CITY

5TH STREET BRIDGE REPLACEMENT

TITLE SHEET

SHEET NO. 1 OF 215

8/15/2016

...\511\1858ab001.dgn

REVISION #	DATE:	DESCRIPTION AND SHEET NO.:	APPROVED BY:	DATE:

REGISTERED PROFESSIONAL ENGINEER
MEGAN R. CARTER
No. 75885
Exp. 6/30/18
CIVIL
STATE OF CALIFORNIA

PLAN SCALE:
PROFILE SCALE:
HORIZ:
VERT:

CONTRACT NO: 17-XX
DESIGNED: M. CARTER
DRAWN: A. LEE
CHECKED:
RECORD DRAWING:
DATE:

DOKKEN ENGINEERING
110 BLUE RAVINE ROAD #200
FOLSOM, CA 95630
PHONE: (916) 858-0642
FAX: (916) 858-0643

CITY OF YUBA CITY

5TH STREET BRIDGE REPLACEMENT

TYPICAL SECTION

SHEET NO.
OF
215

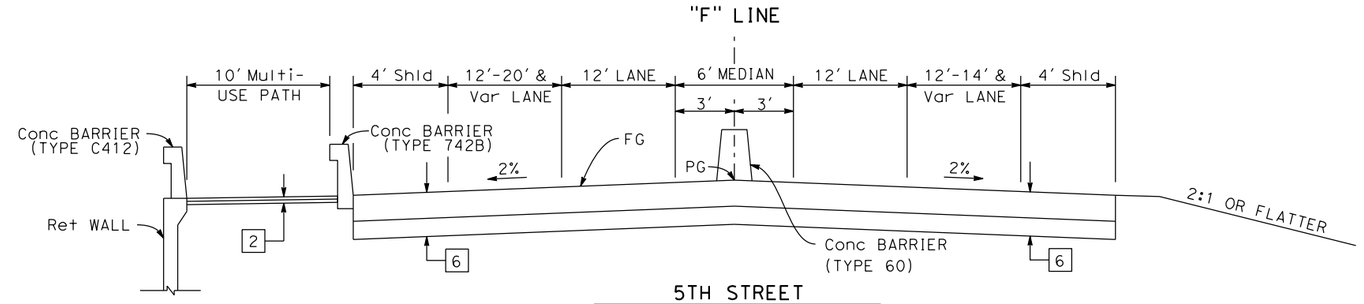

5TH STREET

"F" 34+62 (END APPROACH SLAB) TO 34+87 (BEGIN APPROACH SLAB)

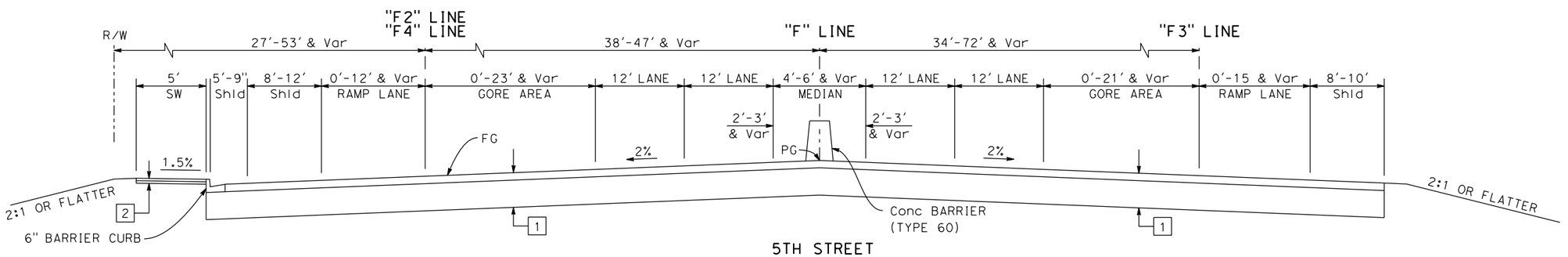

5TH STREET

"F" 21+92 TO 32+54 (BEGIN APPROACH SLAB)

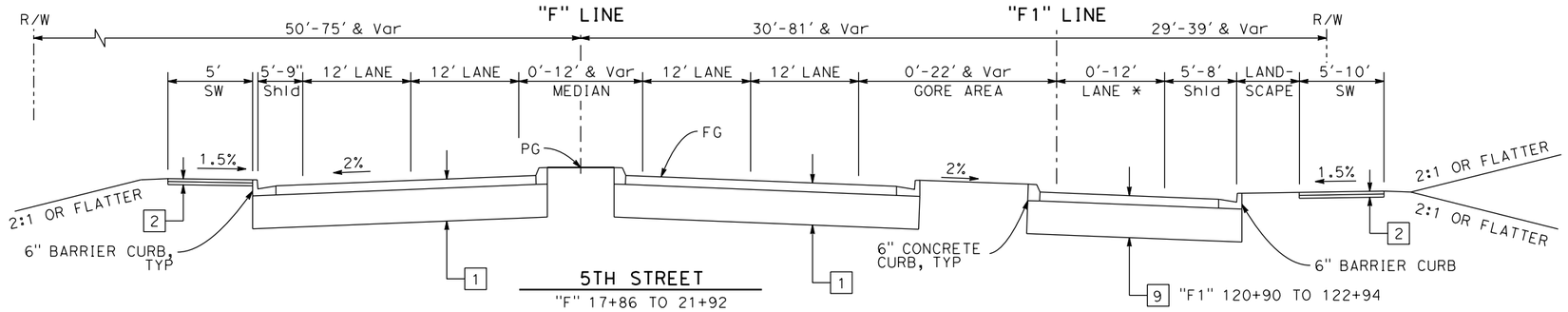

5TH STREET

"F" 17+86 TO 21+92

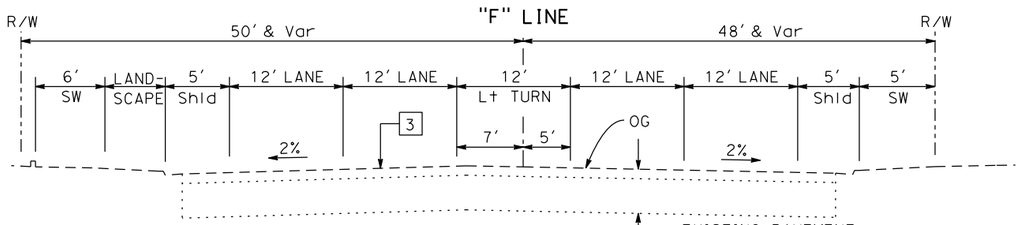

EXISTING BRIDGE STREET

"F" 13+52 TO 17+86

EXISTING PAVEMENT
[6" HMA (TYPE A)
22" AB (CLASS 2)]

LEGEND:

- - - - EXISTING CONDITIONS

———— R/W

NOTES:

1. 6" BARRIER CURB AND 8" BARRIER CURB PER CITY OF YUBA CITY STD PLAN DRAWING No. ST4.
2. 6" CONCRETE CURB PER CITY OF YUBA CITY STD PLAN DRAWING No. ST5.
3. WITHIN MARYSVILLE LIMITS, 6" BARRIER CURB IS TO BE PER CITY OF MARYSVILLE STD PLAN No. 101A.

PAVEMENT SECTIONS:

1 =	6" HMA (TYPE A) 15" AB (CLASS 2)	6 =	12" JPCP 9" AB (CLASS 2)
2 =	4" PCC SIDEWALK 4" AB (CLASS 2)	7 =	3" HMA (TYPE A) 6" AB (CLASS 2)
3 =	SLURRY SEAL	8 =	6" AB (CLASS 2)
4 =	3" HMA (TYPE A) 3" AB (CLASS 2)	9 =	6" HMA (TYPE A) 20" AB (CLASS 2)
5 =	5" HMA (TYPE A) 18" AB (CEMENT-TREATED)	10 =	7" HMA (TYPE A) 22" AB (CLASS 2)

X-1

FOR REDUCED PLANS ORIGINAL SCALE IS IN INCHES 0 1 2 3

ALL DIMENSIONS SHOWN IN FEET UNLESS OTHERWISE NOTED

8/15/2016

...\5111\1858ca001.dgn

REVISION #	DATE	DESCRIPTION AND SHEET NO.	APPROVED BY	DATE

REGISTERED PROFESSIONAL ENGINEER
MEGAN R. CARTER
No. 75885
Exp. 6/30/18
CIVIL
STATE OF CALIFORNIA

PLAN SCALE:
PROFILE SCALE:
HORIZ:
VERT:

CONTRACT NO: 17-XX
DESIGNED: M. CARTER
DRAWN: A. LEE
CHECKED:
RECORD DRAWING:
DATE:

DOKKEN ENGINEERING
110 BLUE RAVINE ROAD #200
FOLSOM, CA 95630
PHONE: (916) 858-0642
FAX: (916) 858-0643

CITY OF YUBA CITY

5TH STREET BRIDGE REPLACEMENT

TYPICAL SECTION

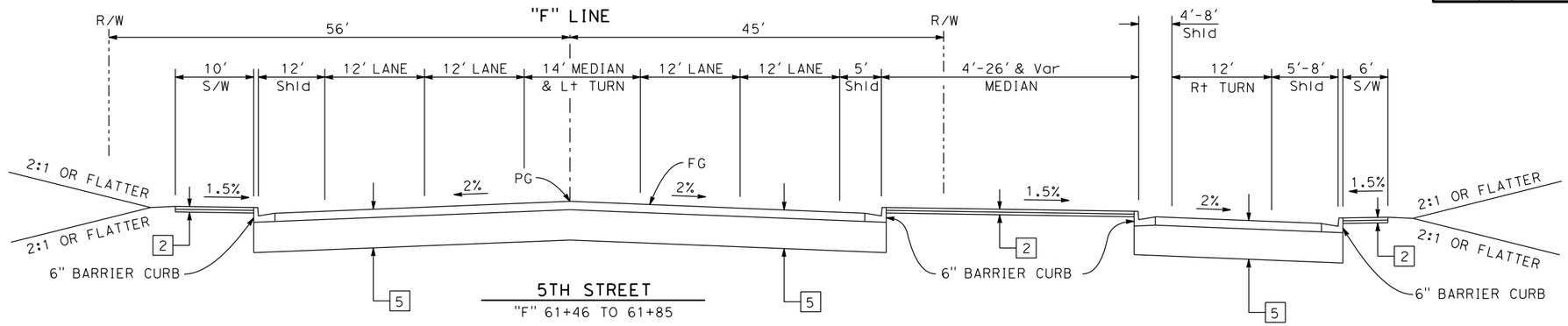

5TH STREET
"F" 61+46 TO 61+85

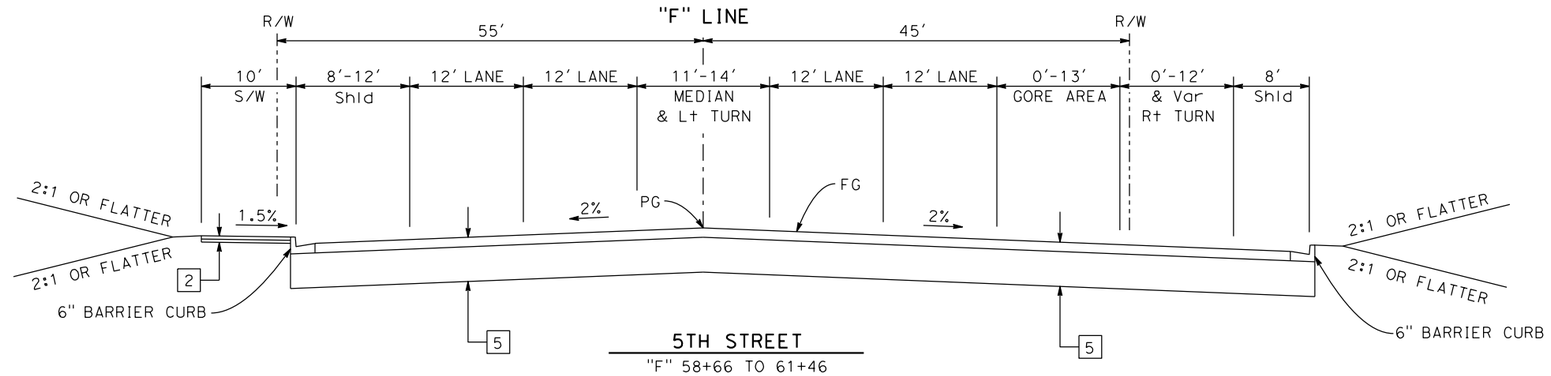

5TH STREET
"F" 58+66 TO 61+46

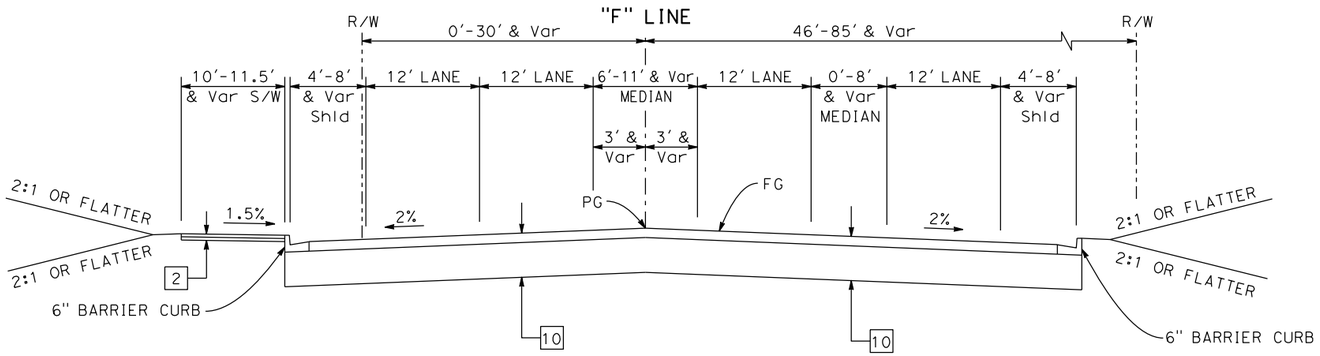

5TH STREET
"F" 53+85 (END APPROACH SLAB) TO 57+94

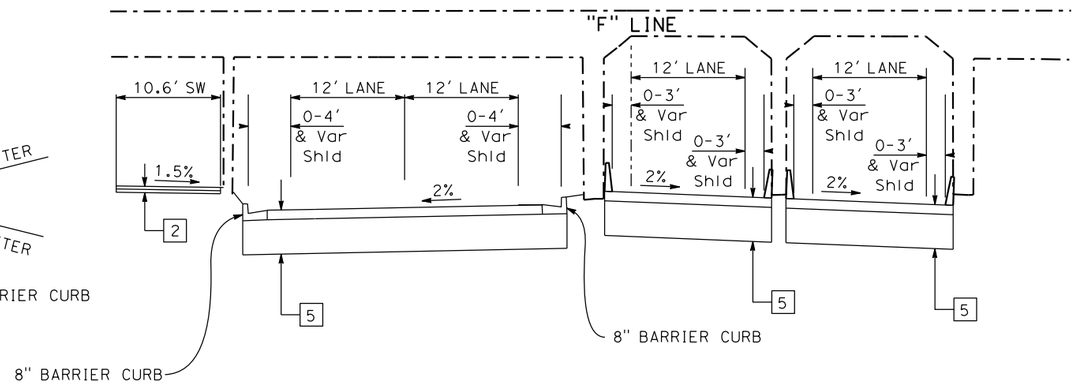

5TH STREET
"F" 57+94 TO 58+66

X-2

FOR REDUCED PLANS
ORIGINAL SCALE IS IN INCHES
0 1 2 3
ALL DIMENSIONS SHOWN IN FEET
UNLESS OTHERWISE NOTED

SHEET NO.
OF
215

8/15/2016

...\511\1858ca0002.dgn

REVISION #	DATE:	DESCRIPTION AND SHEET NO.:	APPROVED BY:	DATE:

REGISTERED PROFESSIONAL ENGINEER
MEGAN R. CARTER
No. 75885
Exp. 6/30/18
CIVIL
STATE OF CALIFORNIA

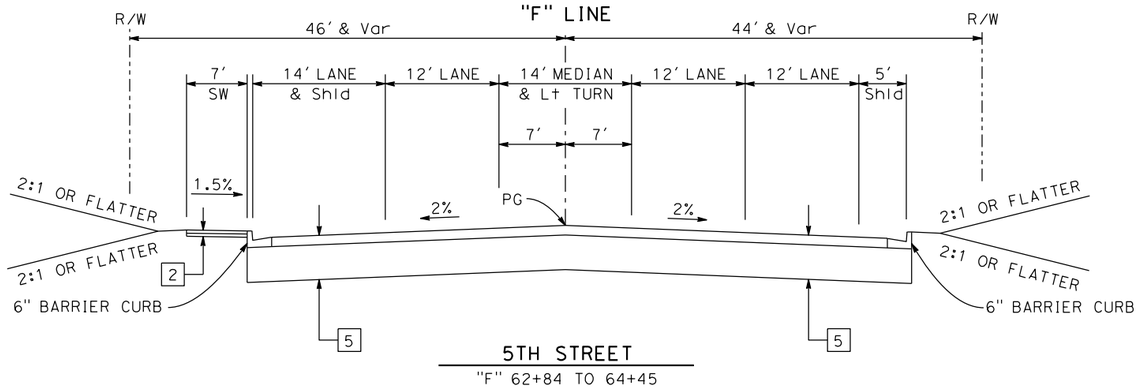

5TH STREET
"F" 62+84 TO 64+45

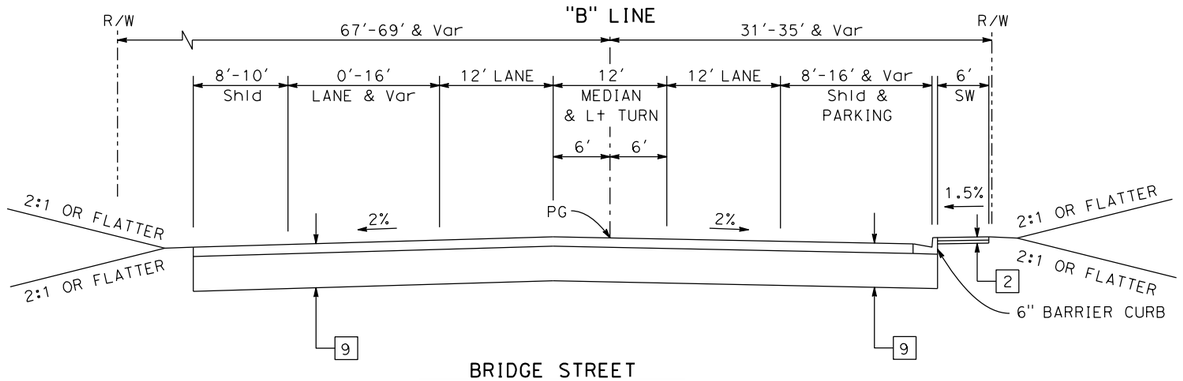

BRIDGE STREET
"B" 527+17 TO 533+82

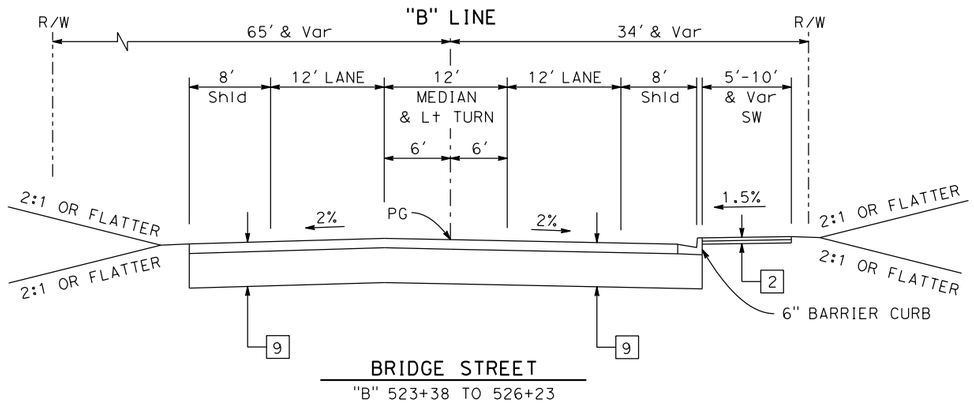

BRIDGE STREET
"B" 523+38 TO 526+23

FOR REDUCED PLANS
ORIGINAL SCALE IS IN INCHES

0 1 2 3

ALL DIMENSIONS SHOWN IN FEET
UNLESS OTHERWISE NOTED

PLAN SCALE:
PROFILE SCALE:
HORIZ:
VERT:

CONTRACT NO: 17-XX
DESIGNED: M. CARTER
DRAWN: A. LEE
CHECKED:
RECORD DRAWING:
DATE:

DOKKEN ENGINEERING
110 BLUE RAVINE ROAD #200
FOLSOM, CA 95630
PHONE: (916) 858-0642
FAX: (916) 858-0643

CITY OF YUBA CITY

5TH STREET BRIDGE REPLACEMENT

TYPICAL SECTION

SHEET NO.
X-3
OF
215

8/15/2016

...\511\1858ca003.dgn

REVISION #	DATE:	DESCRIPTION AND SHEET NO.:	APPROVED BY:	DATE:

REGISTERED PROFESSIONAL ENGINEER
MEGAN R. CARTER
No. 75885
Exp. 6/30/18
CIVIL
STATE OF CALIFORNIA

PLAN SCALE:
PROFILE SCALE:
HORIZ:
VERT:

CONTRACT NO: 17-XX
DESIGNED: M. CARTER
DRAWN: A. LEE
CHECKED:
RECORD DRAWING:
DATE:

DOKKEN ENGINEERING
110 BLUE RAVINE ROAD #200
FOLSOM, CA 95630
PHONE: (916) 858-0642
FAX: (916) 858-0643

CITY OF YUBA CITY

5TH STREET BRIDGE REPLACEMENT

TYPICAL SECTION

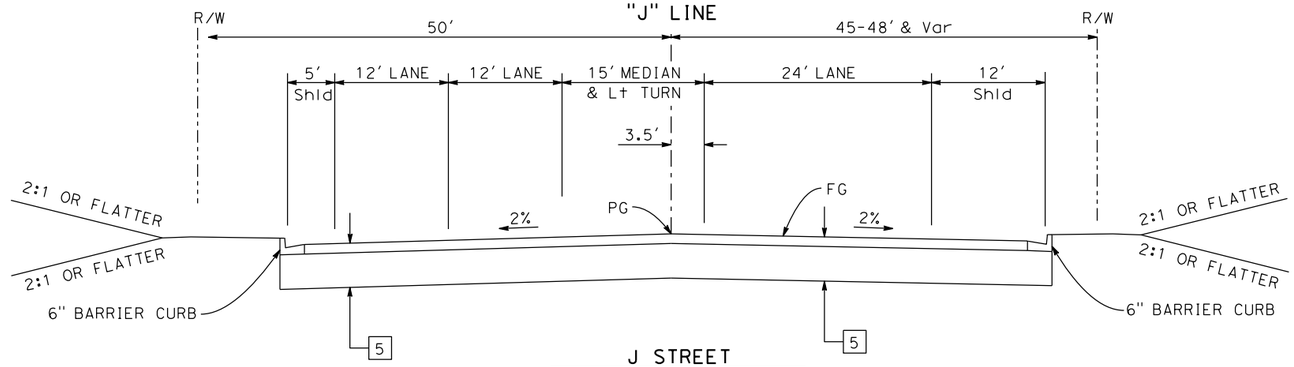

J STREET
"J" 762+64 TO 764+17

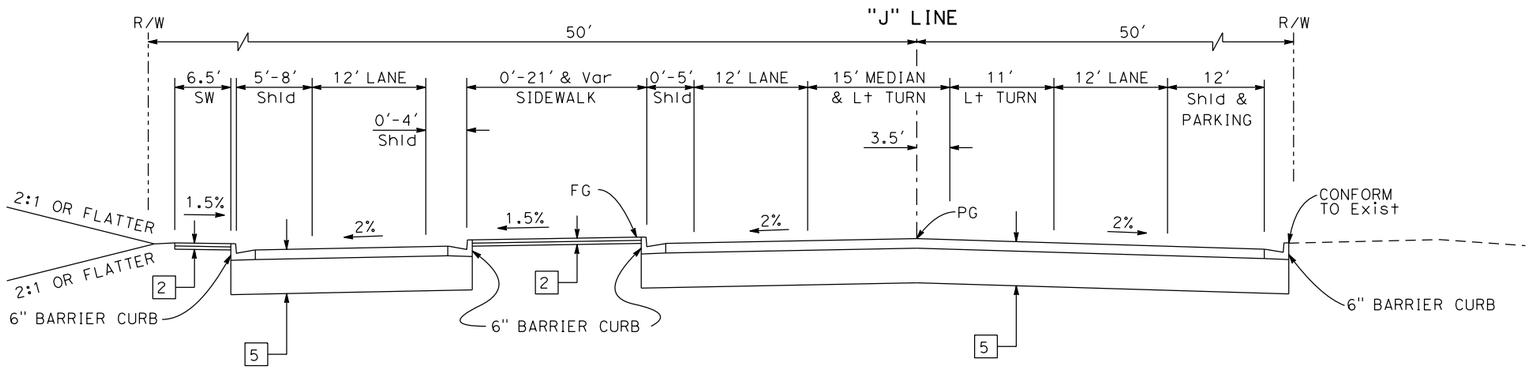

J STREET
"J" 758+64 TO 761+77

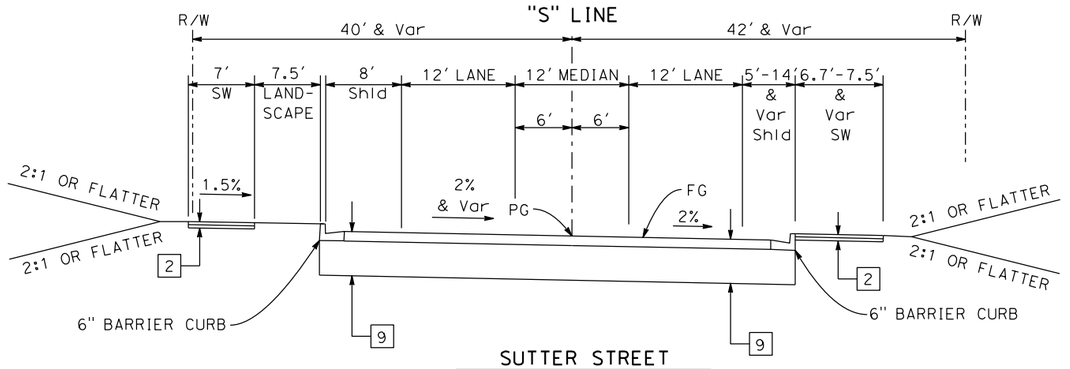

SUTTER STREET
"S" 636+73 TO 638+38

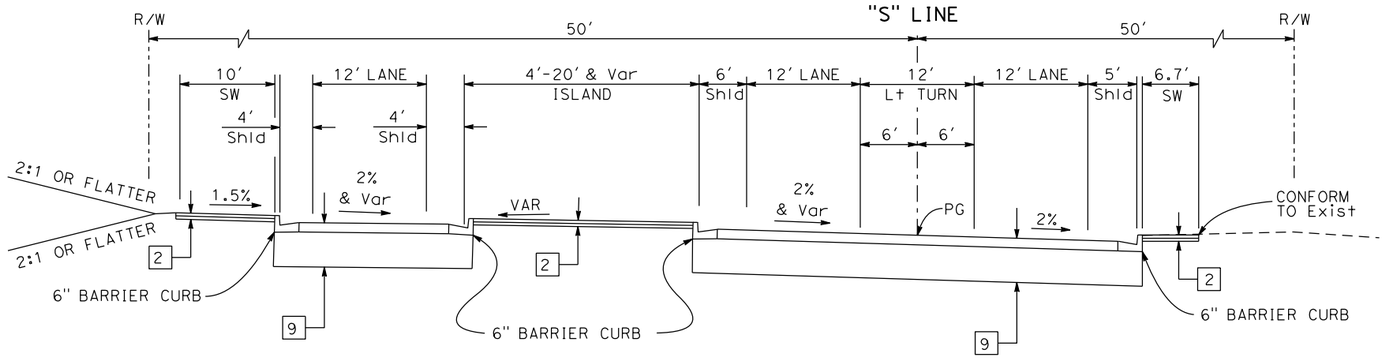

SUTTER STREET
"S" 636+45 TO 636+73

FOR REDUCED PLANS ORIGINAL SCALE IS IN INCHES

0 1 2 3

ALL DIMENSIONS SHOWN IN FEET UNLESS OTHERWISE NOTED

SHEET NO. X-4 OF 215

8/15/2016

...\511\1858ca004.dgn

REVISION #	DATE	DESCRIPTION AND SHEET NO.	APPROVED BY	DATE

REGISTERED PROFESSIONAL ENGINEER
MEGAN R. CARTER
No. 75885
Exp. 6/30/18
CIVIL
STATE OF CALIFORNIA

PLAN SCALE:
PROFILE SCALE:
HORIZ:
VERT:

CONTRACT NO: 17-XX
DESIGNED: M. CARTER
DRAWN: A. LEE
CHECKED:
RECORD DRAWING:
DATE:

DOKKEN ENGINEERING
110 BLUE RAVINE ROAD #200
FOLSOM, CA 95630
PHONE: (916) 858-0642
FAX: (916) 858-0643

CITY OF YUBA CITY

5TH STREET BRIDGE REPLACEMENT

TYPICAL SECTION

SHEET NO.
OF
215

"S" LINE

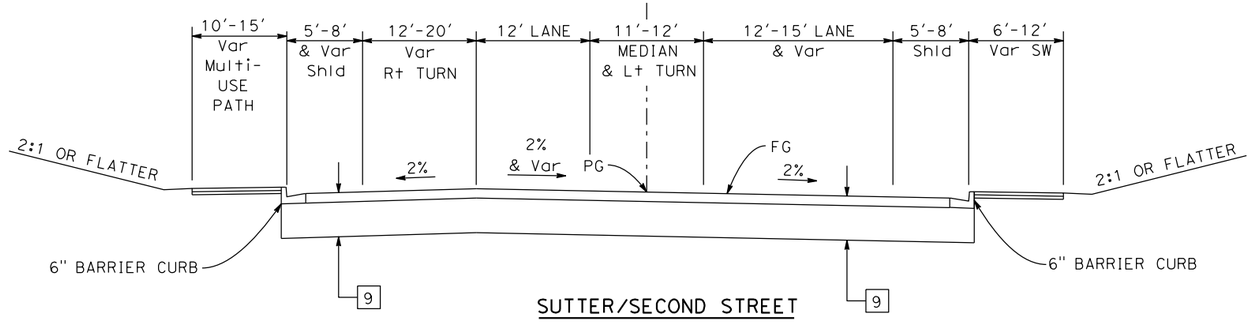

SUTTER/SECOND STREET
"S" 632+36 TO 636+45

"S" LINE

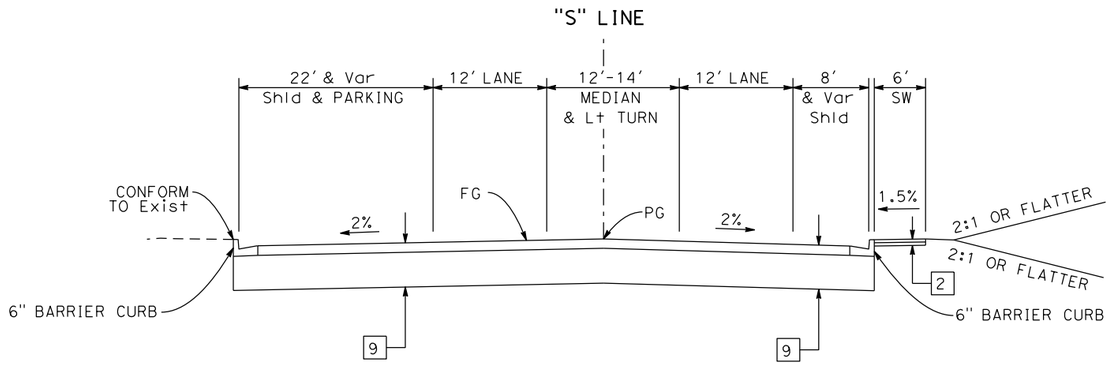

SECOND STREET
"S" 631+19 TO 632+36

"F2" LINE

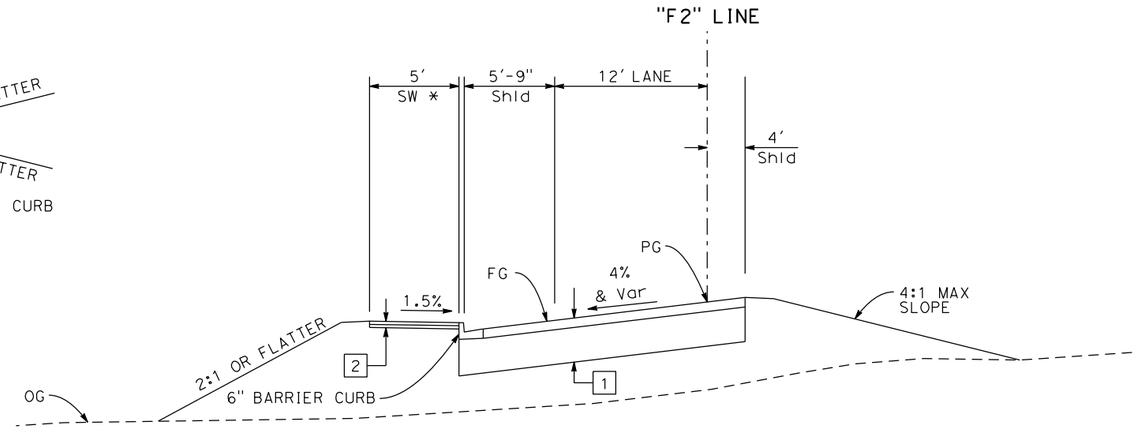

"F2" ON RAMP
"F2" 228+31 TO 230+12

"S" LINE

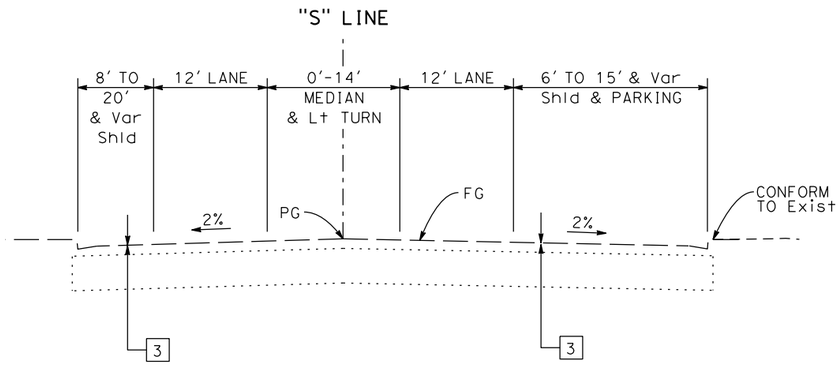

SECOND STREET
"S" 627+45 TO 631+19

FOR REDUCED PLANS
ORIGINAL SCALE IS IN INCHES
0 1 2 3
ALL DIMENSIONS SHOWN IN FEET
UNLESS OTHERWISE NOTED

X-5

8/15/2016

...\51\1858ca005.dgn

REVISION #	DATE:	DESCRIPTION AND SHEET NO.:	APPROVED BY:	DATE:

REGISTERED PROFESSIONAL ENGINEER
MEGAN R. CARTER
No. 75885
Exp. 6/30/18
CIVIL
STATE OF CALIFORNIA

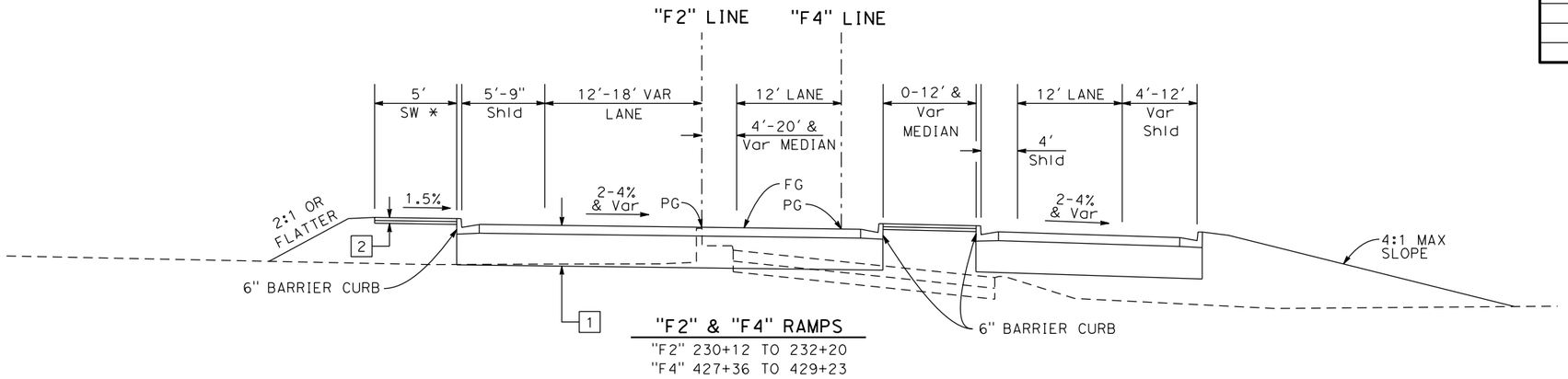

"F2" & "F4" RAMPS
"F2" 230+12 TO 232+20
"F4" 427+36 TO 429+23

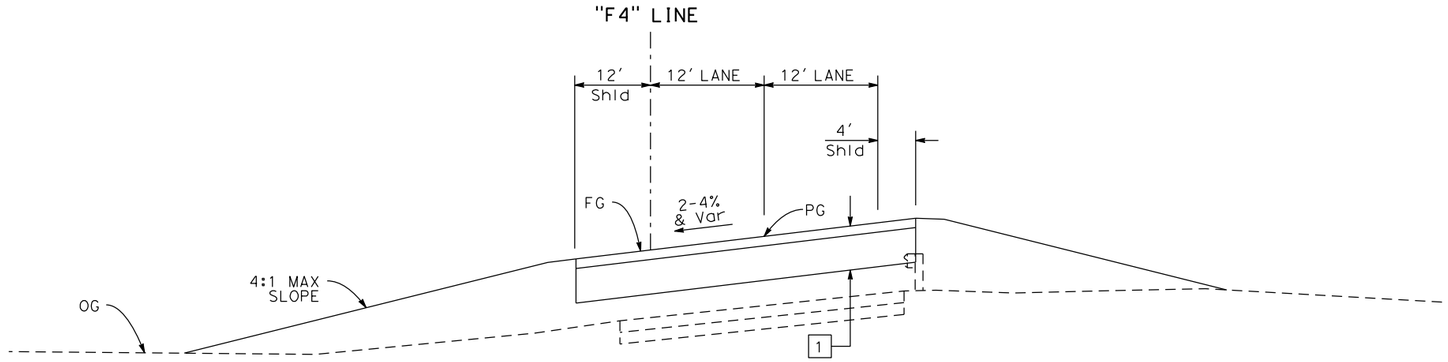

"F4" OFF RAMP
"F4" 429+23 TO 430+63

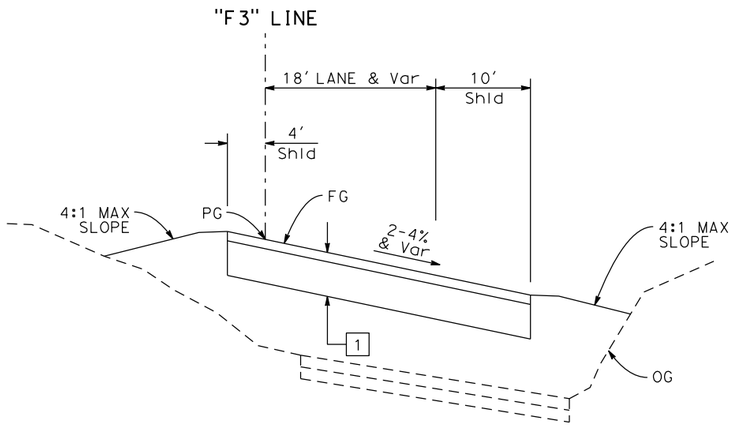

"F3" ON RAMP
"F3" 326+07 TO 327+12

FOR REDUCED PLANS
ORIGINAL SCALE IS IN INCHES

0 1 2 3

ALL DIMENSIONS SHOWN IN FEET
UNLESS OTHERWISE NOTED

PLAN SCALE:
PROFILE SCALE:
HORIZ:
VERT:

CONTRACT NO: 17-XX
DESIGNED: M. CARTER
DRAWN: A. LEE
CHECKED:
RECORD DRAWING:
DATE:

DOKKEN ENGINEERING
110 BLUE RAVINE ROAD #200
FOLSOM, CA 95630
PHONE: (916) 858-0642
FAX: (916) 858-0643

CITY OF
YUBA CITY

5TH STREET BRIDGE REPLACEMENT

TYPICAL SECTION

SHEET NO.
X-6
OF
215

8/15/2016

...\51\1858ca006.dgn

SURVEY CONTROL TABLE				
CONTROL NUMBER	NORTHING	EASTING	ELEVATION	DESCRIPTION
D-1	6670618.25	2176643.39	84.43	AERIAL TARGET
D-2	6671627.72	2175164.62	59.75	AERIAL TARGET
D-3	6672587.16	2177532.91	84.43	AERIAL TARGET
D-4	6673080.30	2175796.84	59.70	AERIAL TARGET
D-5	6675570.89	2177510.81	58.22	AERIAL TARGET
D-6	6676379.18	2178035.65	61.68	AERIAL TARGET
D-7	6675809.52	2176325.44	75.25	AERIAL TARGET
D-8	6676523.65	2176742.90	59.07	AERIAL TARGET
D-9	6675873.14	2175479.77	66.96	AERIAL TARGET
D-10	6676672.26	2176039.73	62.57	AERIAL TARGET

SURVEY CONTROL TABLE				
CONTROL NUMBER	NORTHING	EASTING	ELEVATION	DESCRIPTION
1	2175362.40	6676910.71	88.52	C GPS BASE
12	2173621.05	6674279.23	61.82	K1435
60	2176850.14	6672889.63	83.78	SURVEY CONTROL
61	2176479.65	6673237.67	83.23	SURVEY CONTROL
62	2176599.74	6673097.85	84.19	SURVEY CONTROL
63	2176934.84	6674884.85	87.34	SURVEY CONTROL
64	2176700.71	6675345.61	87.06	SURVEY CONTROL
3900	2175625.25	6670624.44	59.51	SURVEY CONTROL
3901	2175526.92	6670464.38	63.18	SURVEY CONTROL

REVISION #	DATE:	DESCRIPTION AND SHEET NO.:	APPROVED BY:	DATE:

REGISTERED PROFESSIONAL ENGINEER
MEGAN R. CARTER
No. 75885
Exp. 6/30/18
CIVIL
STATE OF CALIFORNIA

PLAN SCALE:
PROFILE SCALE:
HORIZ:
VERT:

CONTRACT NO: 17-XX
DESIGNED: M. CARTER
DRAWN: A. LEE
CHECKED:
RECORD DRAWING:
DATE:

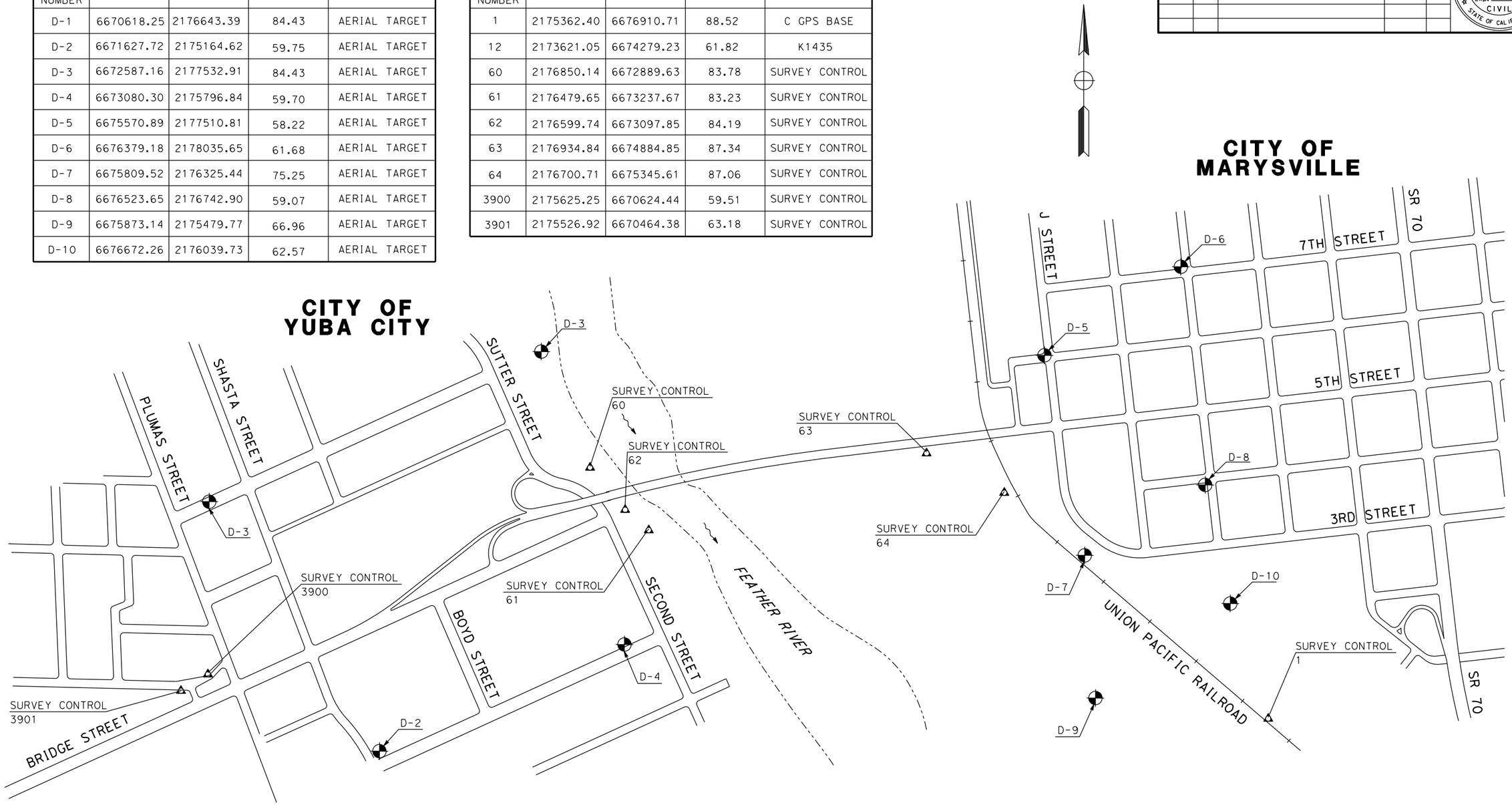

HORIZONTAL CONTROL:

COORDINATE VALUES FOR THIS SURVEY ARE REFERENCED TO THE NORTH AMERICAN DATUM OF 1983 (NAD83) AND ORIGINATE FROM FOUND MONUMENTS KS1971 AND KS1813 ESTABLISHED BY THE NATIONAL GEODETIC SURVEY. THE HORIZONTAL VALUES ARE BASED UPON THE NATIONAL READJUSTMENT OF 2007 AND IS EQUIVALENT TO NAD83 (NSRS2007).

SURVEY CONTROL NAD83 NAVD88
NGS MONUMENT K1435
PID - KS1971

BENCHMARK:

ELEVATION VALUES FOR THIS SURVEY ARE REFERENCED TO THE NORTH AMERICAN VERTICAL DATUM OF 1988 (NAVD88) AND ORIGINATE FROM FOUND MONUMENTS KS1971 ASSIGNED THE ELEVATION 61.82 NAVD88 AND KS1813 ASSIGNED THE ELEVATION 61.26 NAVD88 BY THE NATIONAL GEODETIC SURVEY BY DIFFERENTIAL LEVELING IN JUNE 1991.

FOR REDUCED PLANS ORIGINAL SCALE IS IN INCHES
0 1 2 3
ALL DIMENSIONS SHOWN IN FEET UNLESS OTHERWISE NOTED

DOKKEN ENGINEERING
110 BLUE RAVINE ROAD #200
FOLSOM, CA 95630
PHONE: (916) 858-0642
FAX: (916) 985-1845

CITY OF YUBA CITY

5TH STREET BRIDGE REPLACEMENT
SURVEY CONTROL

SHEET NO.
CD-1
OF
215

8/15/2016
...\511\1858cb001.dgn

REVISION #	DATE:	DESCRIPTION AND SHEET NO.:	APPROVED BY:	DATE:

REGISTERED PROFESSIONAL ENGINEER
MEGAN R. CARTER
No. 75885
Exp. 6/30/18
CIVIL
STATE OF CALIFORNIA

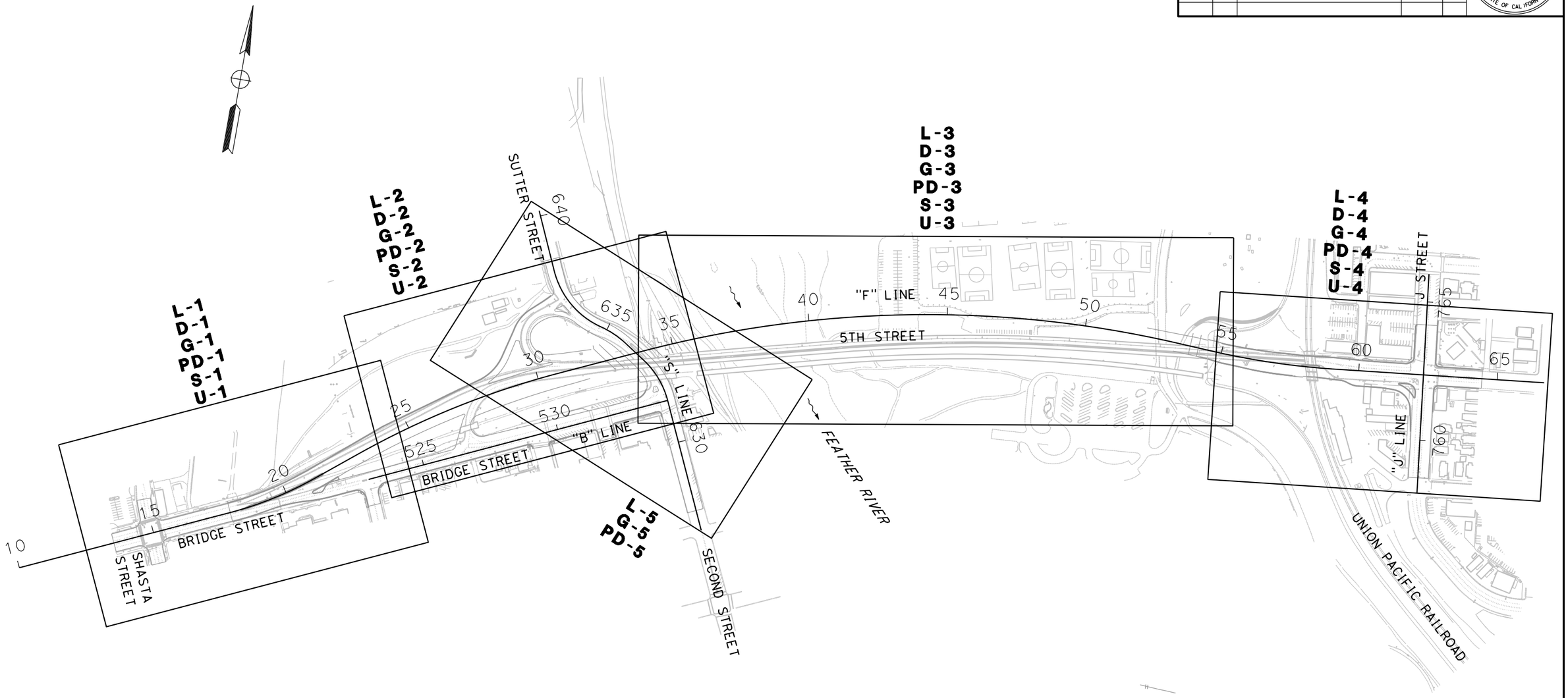

PLAN SCALE: 1"=180'
PROFILE SCALE:
HORIZ:
VERT:

CONTRACT NO: 17-XX
DESIGNED: M. CARTER
DRAWN: A. LEE
CHECKED:
RECORD DRAWING: DATE:

DOKKEN ENGINEERING
110 BLUE RAVINE ROAD #200
FOLSOM, CA 95630
PHONE: (916) 858-0642
FAX: (916) 985-1845

CITY OF YUBA CITY

5TH STREET BRIDGE REPLACEMENT

KEY MAP

SHEET NO.
OF
215

K-1

FOR REDUCED PLANS
ORIGINAL SCALE IS IN INCHES
0 1 2 3
ALL DIMENSIONS SHOWN IN FEET
UNLESS OTHERWISE NOTED

8/15/2016

...\511\1858da001.dgn

LEGEND:

- TREE GROUP TO BE PROTECTED
- TREE GROUP TO BE REMOVED
- ESA — TEMPORARY FENCE (TYPE ESA)
- POTENTIAL STAGING AREA
- POTENTIAL CONSTRUCTION ACCESS
- APE — ENVIRONMENTAL AREA OF POTENTIAL EFFECTS (APE)
- ENVIRONMENTALLY SENSITIVE AREA
- TEMPORARY BRIDGE TRESTLE

HYDROSEED MIX - RIPARIAN MIX

TO BE PLACED ON DISTURBED AREAS WITHIN THE ESA

COMMON NAME	SPECIFIC NAME	MINIMUM % PURITY	MINIMUM % GERMINATION	PURE LIVE SEED lbs/ACRE
ANNUAL HAIRGRASS	*DESCHAMPSIA DANTHONIODES*	90%	80%	0.25
BEARDLESS WILD RYE	*ELYMUS TRITICOIDES*	90%	80%	4
BENTGRASS	*AGRPSTOS EXARATA*	95%	80%	0.1
CALIFORNIA MUGWORT	*ARTEMISIA DOUGLASIANA*	15%	40%	0.1
MILKWEED	*ASCLEPIAS FASCICULARIS*	90%	65%	2
MONKEYFLOWER	*MIMULUS GUTTATUS*	10%	69%	0.05
TOMCAT CLOVER	*TRIFOLIUM WILLDENOVII*	90%	80%	0.25
SPANISH LOTUS	*ACMISPON AMERICANUS*	98%	75%	1.5
WESTERN GOLDENROD	*EUTHAMIA OCCIDENTALIS*	24%	45%	0.1
			TOTAL	6.85

REMOVE TREE DETAIL

NO SCALE

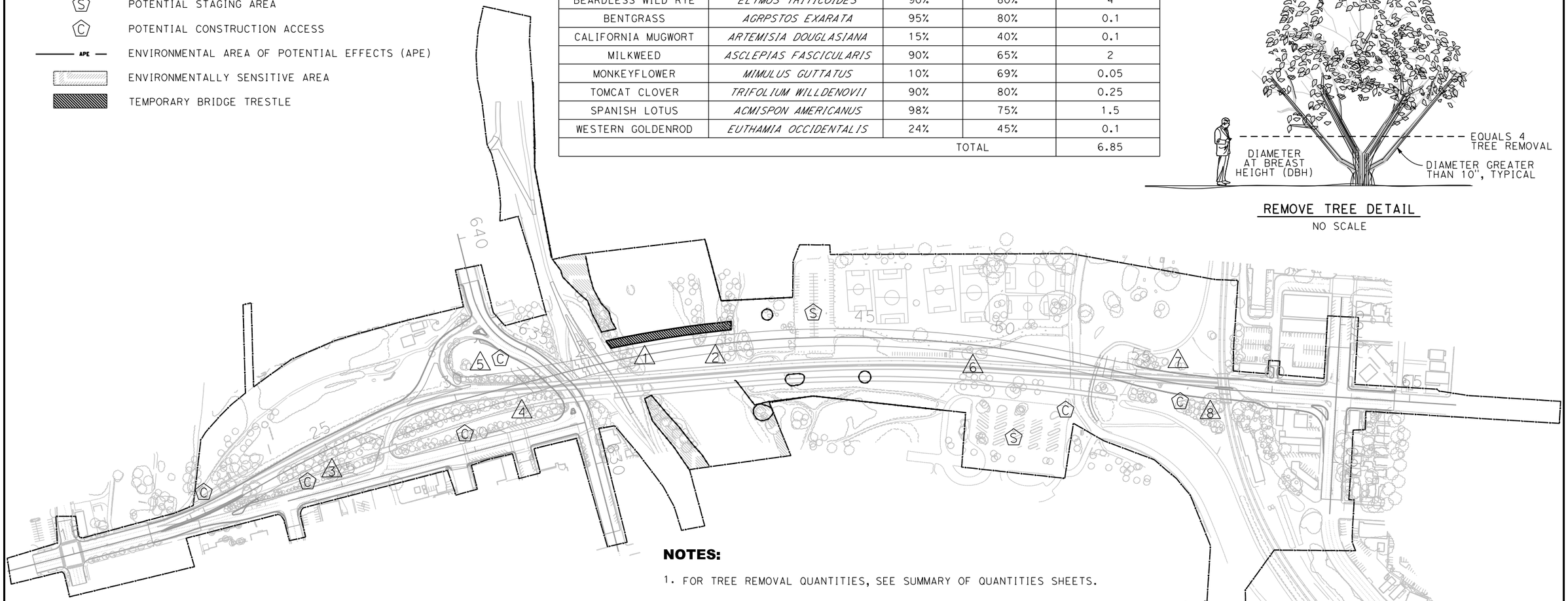

HYDROSEED MIX - UPLAND MIX

COMMON NAME	SPECIFIC NAME	MINIMUM % PURITY	MINIMUM % GERMINATION	PURE LIVE SEED lbs/ACRE
BEARDLESS WILD RYE	*ELYMUS TRITICOIDES*	90%	80%	4
CALIFORNIA BROME	*BROMUS CARINATUS*	95%	90%	5
CALIFORNIA GOLDFIELDS	*LASTHENIA CALIFORNICA*	55%	70%	0.1
CALIFORNIA POPPY	*ESCHSCHOLZIA CALIFORNICA*	98%	80%	0.75
CHICK LUPINE	*LUPINUS MICROCARPUS VAR. MICROCARPUS*	98%	85%	3
MILKWEED	*ASCLEPIAS FASCICULARIS*	90%	65%	2
PINE BLUEGRASS	*POA SECUNDA*	94%	63%	1
PURPLE CLARKIA	*CLARKIA PURPUREA*	95%	90%	0.25
SPANISH LOTUS	*ACMISPON AMERICANUS*	98%	75%	1.5
TOMCAT CLOVER	*TRUFOLIUM WILDENOVII*	90%	80%	0.5
YARROW	*ACHILLEA MILLEFOLIUM*	98%	85%	0.1
			TOTAL	18.2

NOTES:

1. FOR TREE REMOVAL QUANTITIES, SEE SUMMARY OF QUANTITIES SHEETS.
2. IF VEGETATION REMOVAL (INCLUDING TREE REMOVAL) AND CONSTRUCTION IS TO TAKE PLACE DURING THE NESTING SEASON (MARCH 1ST - SEPTEMBER 1ST), A PRE-CONSTRUCTION NESTING BIRD SURVEY MUST BE CONDUCTED WITHIN 7 DAYS PRIOR TO VEGETATION REMOVAL AND START OF CONSTRUCTION.
3. WITHIN 2 WEEKS OF THE NESTING BIRD SURVEY, ALL VEGETATION CLEARED BY THE BIOLOGIST WILL BE REMOVED BY THE CONTRACTOR.
4. A MINIMUM 100 FT NO-DISTURBANCE BUFFER WILL BE ESTABLISHED AROUND ANY ACTIVE NESTS OF MIGRATORY BIRDS AND A MINIMUM 300 FT NO-DISTURBANCE BUFFER WILL BE ESTABLISHED AROUND ANY NESTING RAPTOR SPECIES. THE CONTRACTOR MUST IMMEDIATELY STOP WORK IN THE NESTING AREA UNTIL THE APPROPRIATE BUFFER IS ESTABLISHED AND IS PROHIBITED FROM CONDUCTING WORK THAT COULD DISTURB THE BIRDS (AS DETERMINED BY THE PROJECT BIOLOGIST AND IN COORDINATION WITH WILDLIFE AGENCIES) IN THE BUFFER AREA UNTIL A QUALIFIED BIOLOGIST DETERMINES THE YOUNG HAVE FLEDGED. A REDUCED BUFFER CAN BE ESTABLISED IF DETERMINED APPROPRIATE BY THE PROJECT BIOLOGIST AND APPROVED BY CDFW.
5. TEMPORARY FENCE (TYPE ESA) MUST BE INSTALLED UNDER THE DIRECTION OF A BIOLOGIST.

FOR REDUCED PLANS ORIGINAL SCALE IS IN INCHES 0 1 2 3

ALL DIMENSIONS SHOWN IN FEET UNLESS OTHERWISE NOTED

REVISION #	DATE	DESCRIPTION AND SHEET NO.	APPROVED BY	DATE

REGISTERED PROFESSIONAL ENGINEER — NATHAN J. DONNELLY — No. 64459 — Exp. 6/30/17 — CIVIL — STATE OF CALIFORNIA

PLAN SCALE: 1"=180'
PROFILE SCALE:
HORIZ:
VERT:

CONTRACT NO: 17-XX
DESIGNED: N. DONNELLY
DRAWN: E. ESPINOZA
CHECKED:
RECORD DRAWING:
DATE:

DOKKEN ENGINEERING
110 BLUE RAVINE ROAD 1200
FOLSOM, CA 95630
PHONE: (916) 858-0642
FAX: (916) 858-0643

CITY OF YUBA CITY

5TH STREET BRIDGE REPLACEMENT
ENVIRONMENTALLY SENSITIVE AREA PLAN

SHEET NO.
OF 215

ESA-1

8/15/2016

...\511\1858db001.dgn

NOTES:

1. FOR GILSIZER SLOUGH MODIFICATIONS, SEE CONSTRUCTION DETAILS C-10.
2. ALL DRIVEWAYS MUST BE CONSTRUCTED TO CITY STANDARD DETAIL ST11, HEAVY-DUTY DRIVEWAY.
3. FOR PAVEMENT CONFORMS, SEE CONSTRUCTION SHEET C-12.

PAVEMENT SECTIONS:

1	=	6" HMA (TYPE A) 15" AB (CLASS 2)
2	=	4" PCC SIDEWALK 4" AB (CLASS 2)
3	=	SLURRY SEAL
4	=	3" HMA (TYPE A) 3" AB (CLASS 2)
5	=	5" HMA (TYPE A) 18" AB (CEMENT-TREATED)
6	=	12" JPCP 9" AB (CLASS 2)
7	=	3" HMA (TYPE A) 6" AB (CLASS 2)
8	=	6" AB (CLASS 2)
9	=	6" HMA (TYPE A) 20" AB (CLASS 2)
10	=	7" HMA (TYPE A) 22" AB (CLASS 2)

LEGEND:

- ..... C, CUT
- — — F, FILL
- -—-— DW, DRIVEWAY ℄ FOR DETAILS, SEE CONSTRUCTION DETAILS SHEET
- HMA CONFORM, SEE CONSTRUCTION DETAIL SHEETS

CURVE DATA				
No	RADIUS (ft)	DELTA	TANGENT (ft)	LENGTH (ft)
1	1300.00	14°32'38"	165.89	330.00
2	3026.00	14°31'7"	385.46	766.78
3	562.00	5°2'16"	24.72	49.41
4	538.00	8°11'28"	38.52	76.91

REVISION #	DATE:	DESCRIPTION AND SHEET NO.:	APPROVED BY:	DATE:

REGISTERED PROFESSIONAL ENGINEER
MEGAN R. CARTER
No. 75885
Exp. 6/30/18
CIVIL
STATE OF CALIFORNIA

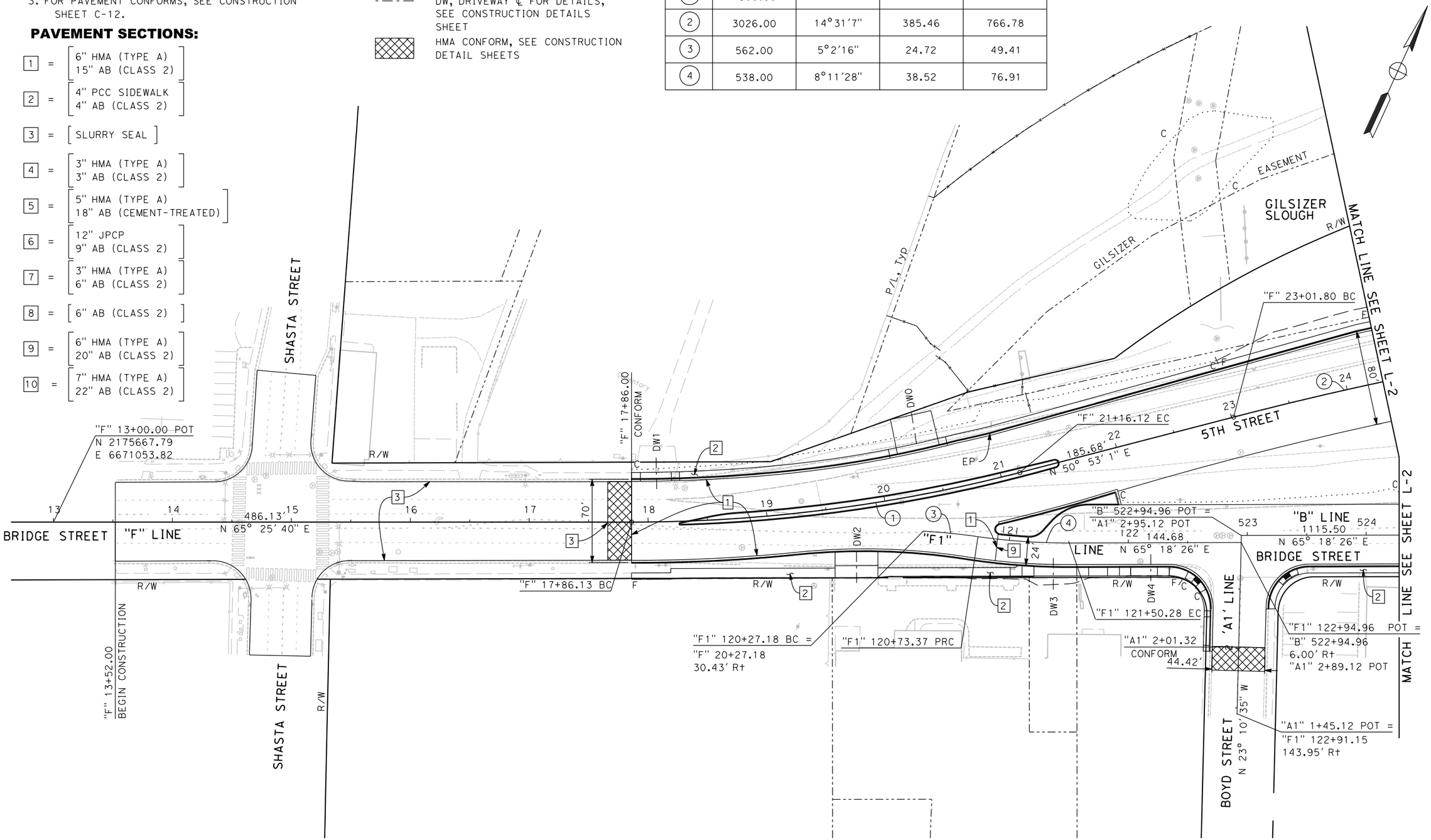

L-1

FOR REDUCED PLANS
ORIGINAL SCALE IS IN INCHES

0 1 2 3

ALL DIMENSIONS SHOWN IN FEET
UNLESS OTHERWISE NOTED

8/15/2016

...\51\1858e001.dgn

PLAN SCALE: 1"=40'
PROFILE SCALE:
HORIZ:
VERT:

CONTRACT NO: 17-XX
DESIGNED: M. CARTER
DRAWN: A. LEE
CHECKED:
RECORD DRAWING:
DATE:

DOKKEN ENGINEERING
110 BLUE RAVINE ROAD #200
FOLSOM, CA 95630
PHONE: (916) 858-0642
FAX: (916) 858-0643

CITY OF YUBA CITY

5TH STREET BRIDGE REPLACEMENT

LAYOUT PLAN

SHEET NO.
OF
215

CURVE DATA				
No	RADIUS (ft)	DELTA	TANGENT (ft)	LENGTH (ft)
2	3026.00	14°31'7"	385.46	766.78
3	4026.00	27°34'39"	988.04	1937.79
4	193.00	41°31'11"	73.16	139.86
5	130.00	43°58'38"	52.39	99.78
6	86.00	166°46'18"	741.67	250.32
7	62.00	82°48'44"	54.67	89.61
8	3000.00	7°9'45"	187.76	375.03

NOTES:

1. FOR SECOND STREET AND SUTTER STREET INFORMATION, SEE SHEET L-5.
2. FOR RETAINING WALLS, SEE STRUCTURE PLANS.

REVISION #	DATE:	DESCRIPTION AND SHEET NO.:	APPROVED BY:	DATE:

REGISTERED PROFESSIONAL ENGINEER
MEGAN R. CARTER
No. 75885
Exp. 6/30/18
CIVIL
STATE OF CALIFORNIA

PLAN SCALE: 1"=40'
PROFILE SCALE:
HORIZ:
VERT:

CONTRACT NO: 17-XX
DESIGNED: M. CARTER
DRAWN: A. LEE
CHECKED:
RECORD DRAWING:
DATE:

DOKKEN ENGINEERING
110 BLUE RAVINE ROAD #200
FOLSOM, CA 95630
PHONE: (916) 858-0642
FAX: (916) 985-1865

CITY OF YUBA CITY

5TH STREET BRIDGE REPLACEMENT

LAYOUT PLAN

SHEET NO.
OF
215

L-2

8/15/2016

...\511\1858e0002.dgn

FOR REDUCED PLANS
ORIGINAL SCALE IS IN INCHES
0 1 2 3
ALL DIMENSIONS SHOWN IN FEET
UNLESS OTHERWISE NOTED

REVISION #	DATE:	DESCRIPTION AND SHEET NO.:	APPROVED BY:	DATE:

REGISTERED PROFESSIONAL ENGINEER
MEGAN R. CARTER
No. 75885
Exp. 6/30/18
CIVIL
STATE OF CALIFORNIA

PLAN SCALE: 1"=40'
PROFILE SCALE:
HORIZ:
VERT:

CONTRACT NO: 17-XX
DESIGNED: M. CARTER
DRAWN: A. LEE
CHECKED:
RECORD DRAWING: DATE:

DOKKEN ENGINEERING
110 BLUE RAVINE ROAD #200
FOLSOM, CA 95630
PHONE: (916) 858-0642
FAX: (916) 858-0643

CITY OF YUBA CITY

5TH STREET BRIDGE REPLACEMENT

LAYOUT PLAN

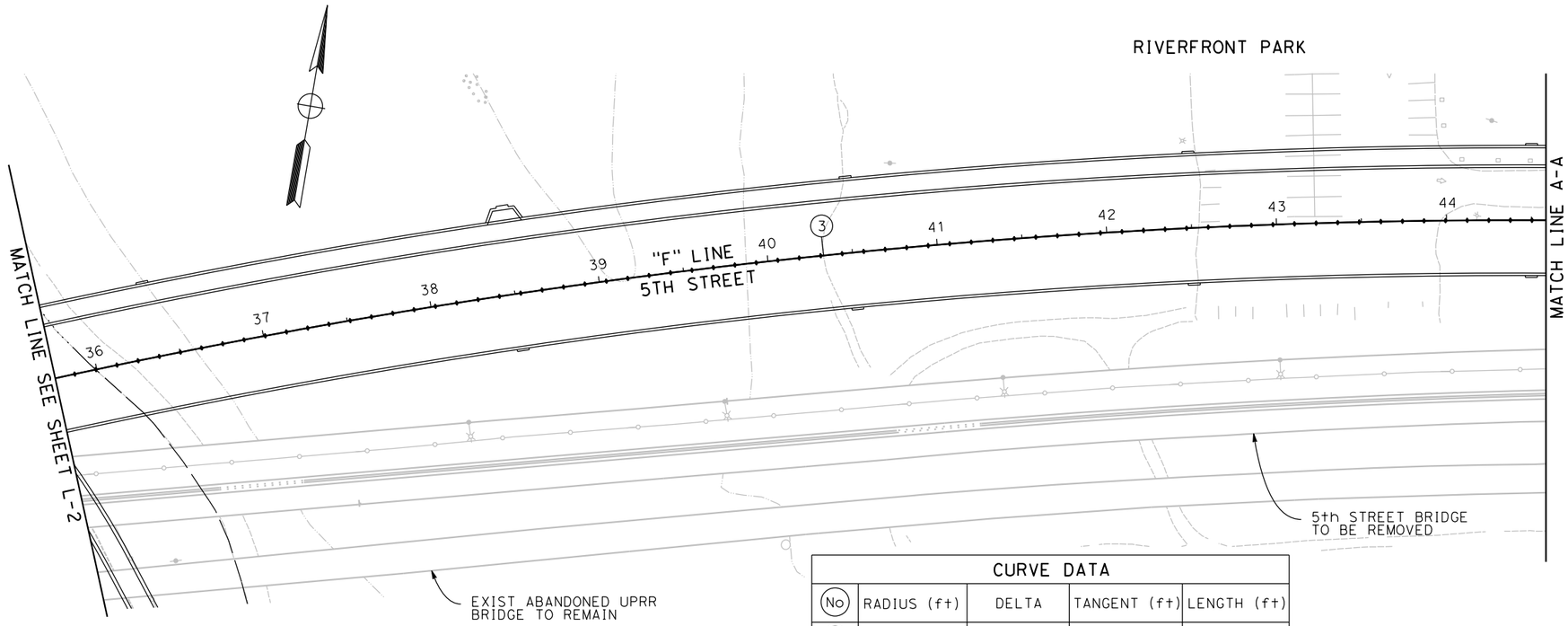

CURVE DATA				
No	RADIUS (ft)	DELTA	TANGENT (ft)	LENGTH (ft)
3	4026.00	27°34'39"	988.04	1937.79
9	2673.64	9°06'01"	212.78	424.66

NOTE:

FOR RIVERFRONT PARK PLANS, SEE PP SHEETS.

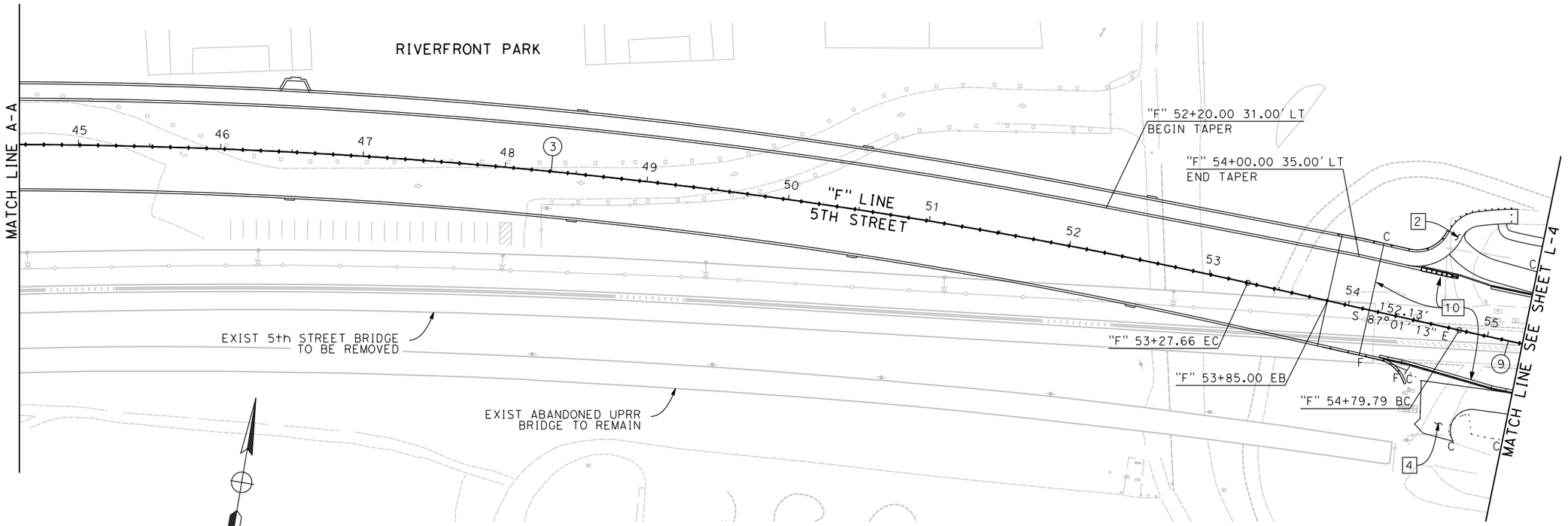

FOR REDUCED PLANS
ORIGINAL SCALE IS IN INCHES

0 1 2 3

ALL DIMENSIONS SHOWN IN FEET
UNLESS OTHERWISE NOTED

L-3

SHEET NO.
OF
215

8/15/2016

...\511\1858ea003.dgn

REVISION #	DATE:	DESCRIPTION AND SHEET NO.:	APPROVED BY:	DATE:

REGISTERED PROFESSIONAL ENGINEER
MEGAN R. CARTER
No. 75885
Exp. 6/30/18
CIVIL
STATE OF CALIFORNIA

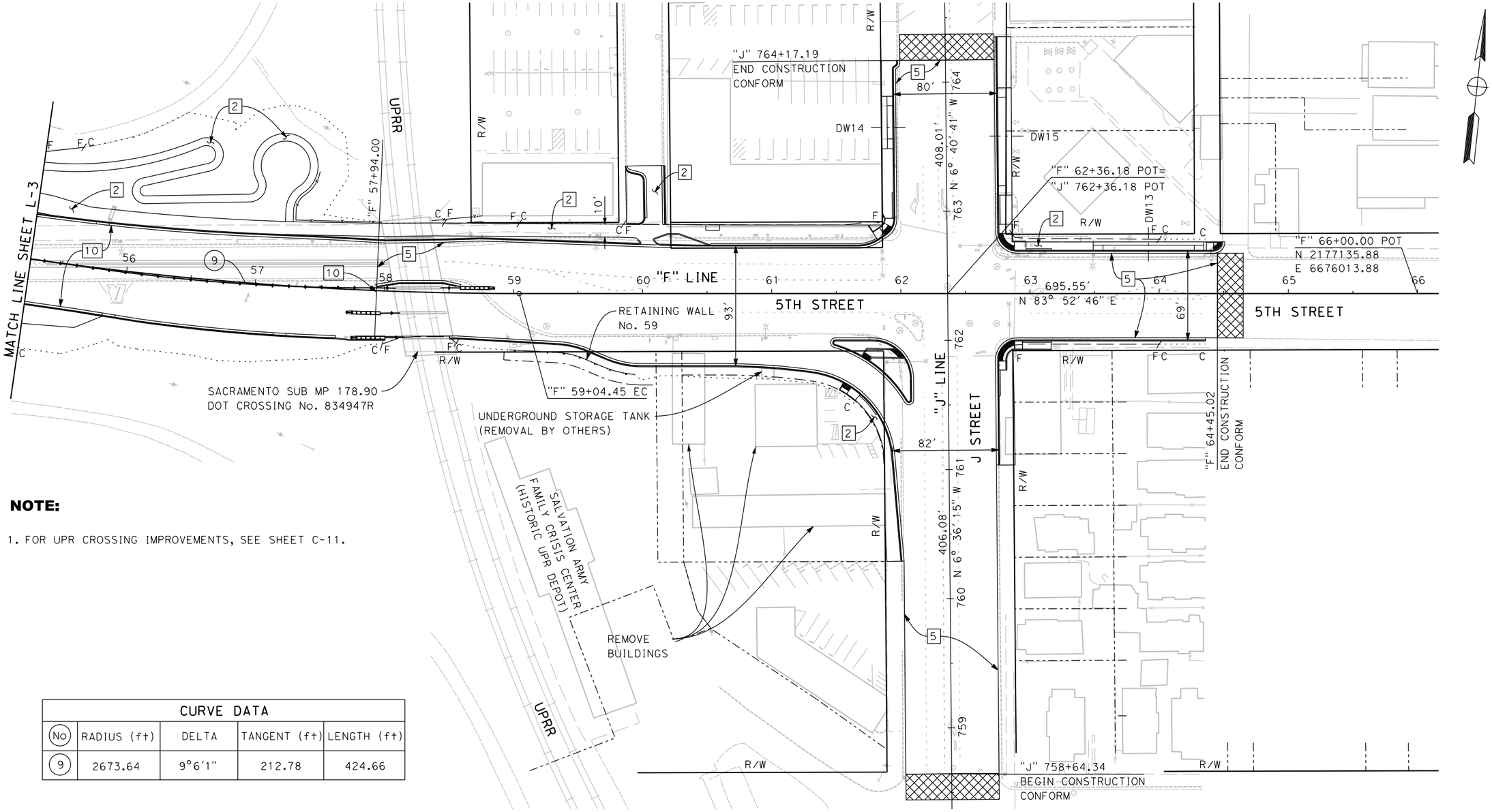

NOTE:

1. FOR UPR CROSSING IMPROVEMENTS, SEE SHEET C-11.

CURVE DATA				
(No)	RADIUS (ft)	DELTA	TANGENT (ft)	LENGTH (ft)
(9)	2673.64	9°6'1"	212.78	424.66

FOR REDUCED PLANS
ORIGINAL SCALE IS IN INCHES
0 1 2 3
ALL DIMENSIONS SHOWN IN FEET
UNLESS OTHERWISE NOTED

PLAN SCALE: 1"=40'
PROFILE SCALE:
HORIZ:
VERT:

CONTRACT NO: 17-XX
DESIGNED: M. CARTER
DRAWN: A. LEE
CHECKED:
RECORD DRAWING:
DATE:

DOKKEN ENGINEERING
110 BLUE RAVINE ROAD #200
FOLSOM, CA 95630
PHONE: (916) 858-0642
FAX: (916) 985-1845

CITY OF YUBA CITY

5TH STREET BRIDGE REPLACEMENT

LAYOUT PLAN

SHEET NO.
L-4
OF
215

8/15/2016

...\51\1858ea004.dgn

REVISION #	DATE	DESCRIPTION AND SHEET NO.	APPROVED BY	DATE

REGISTERED PROFESSIONAL ENGINEER
MEGAN R. CARTER
No. 75885
Exp. 6/30/18
CIVIL
STATE OF CALIFORNIA

CURVE DATA				
No	RADIUS (ft)	DELTA	TANGENT (ft)	LENGTH (ft)
10	300.00	51°37'40"	145.12	270.32
11	330.00	18°51'32"	54.81	108.62
12	300.00	32°22'0"	87.06	169.47

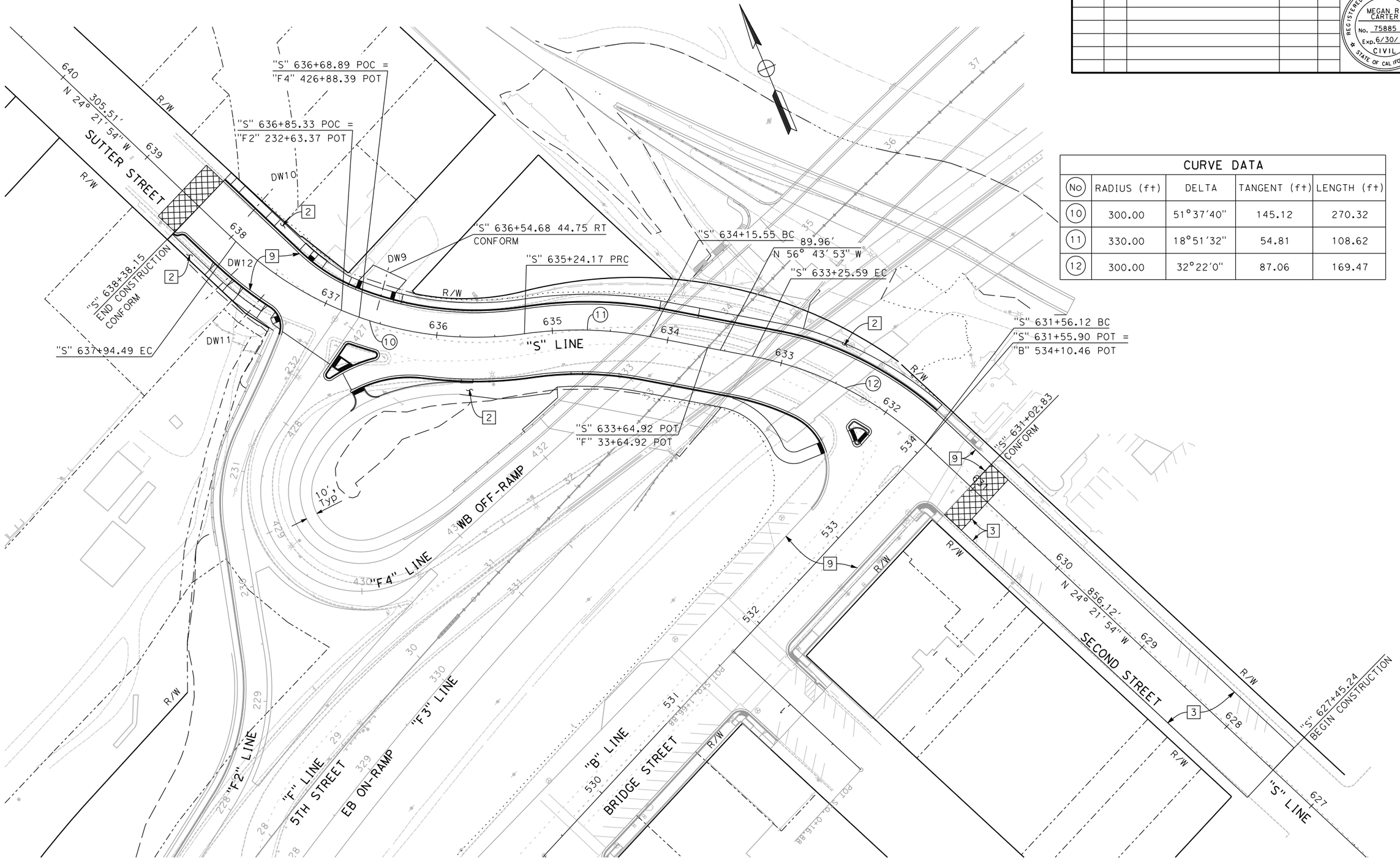

L-5

FOR REDUCED PLANS
ORIGINAL SCALE IS IN INCHES
0 1 2 3
ALL DIMENSIONS SHOWN IN FEET
UNLESS OTHERWISE NOTED

8/15/2016

...\51\1858ea005.dgn

PLAN SCALE: 1"=40'
PROFILE SCALE:
HORIZ:
VERT:

CONTRACT NO: 17-XX
DESIGNED: M. CARTER
DRAWN: A. LEE
CHECKED:
RECORD DRAWING: DATE:

DOKKEN ENGINEERING
110 BLUE RAVINE ROAD #200
FOLSOM, CA 95630
PHONE: (916) 858-0642
FAX: (916) 985-1845

CITY OF YUBA CITY

5TH STREET BRIDGE REPLACEMENT

LAYOUT PLAN

SHEET NO. 5 OF 215

REVISION #	DATE:	DESCRIPTION AND SHEET NO.:	APPROVED BY:	DATE:

REGISTERED PROFESSIONAL ENGINEER
MEGAN R. CARTER
No. 75885
Exp. 6/30/18
CIVIL
STATE OF CALIFORNIA

LEGEND:

D.S. DESIGN SPEED

SSD STOPPING SIGHT DISTANCE

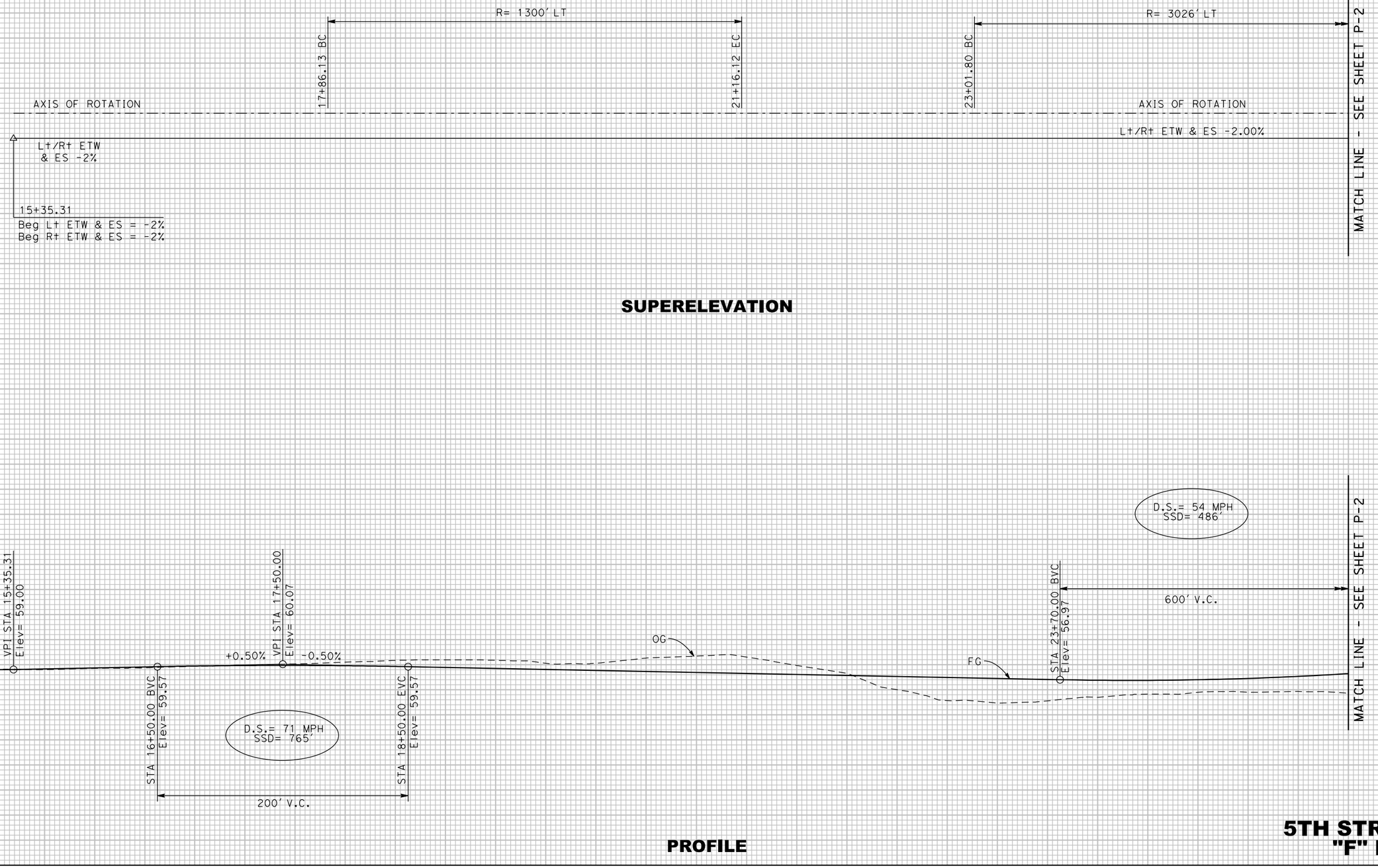

SUPERELEVATION

PROFILE

5TH STREET "F" LINE

FOR REDUCED PLANS
ORIGINAL SCALE IS IN INCHES
0 1 2 3
ALL DIMENSIONS SHOWN IN FEET
UNLESS OTHERWISE NOTED

P-1

PLAN SCALE: 1"=40'
PROFILE SCALE:
HORIZ. 1"=40'
VERT. 1"=10'

CONTRACT NO: 17-XX
DESIGNED: M. CARTER
DRAWN: A. LEE
CHECKED:
RECORD DRAWING: DATE:

DOKKEN ENGINEERING
110 BLUE RAVINE ROAD #200
FOLSOM, CA 95630
PHONE: (916) 858-0642
FAX: (916) 985-1845

CITY OF YUBA CITY

5TH STREET BRIDGE REPLACEMENT
PROFILE

SHEET NO.
OF
215

8/15/2016

...\51\1858f0001.dgn

REVISION #	DATE:	DESCRIPTION AND SHEET NO.:	APPROVED BY:	DATE:

REGISTERED PROFESSIONAL ENGINEER
MEGAN R. CARTER
No. 75885
Exp. 6/30/18
CIVIL
STATE OF CALIFORNIA

PLAN SCALE: 1"=40'
PROFILE SCALE:
HORIZ: 1"=40'
VERT: 1"=10'

CONTRACT NO: 17-XX
DESIGNED: M. CARTER
DRAWN: A. LEE
CHECKED:
RECORD DRAWING: DATE:

DOKKEN ENGINEERING
110 BLUE RAVINE ROAD #200
FOLSOM, CA 95630
PHONE: (916) 858-0642
FAX: (916) 858-0643

CITY OF YUBA CITY

5TH STREET BRIDGE REPLACEMENT

PROFILE

SHEET NO.
OF
215

MATCH LINE - SEE SHEET P-1

R= 3026' LT

30+68.58 EC

AXIS OF ROTATION

L+/R+ ETW & ES -2%

31+83.50

32+21.00

L+ ETW & ES -1.5%

R+ ETW & ES -2%

33+89.87 BC

R= 4026' RT

MATCH LINE - SEE SHEET P-3

4% 2% 0% 2% 4%

SUPERELEVATION

D.S.= 48 MPH
SSD= 402'

D.S.= 54 MPH
SSD= 486'

600' V.C.

STA 29+70.00 EVC
Elev= 70.00

FG

OG

STA 31+75.00 BVC
Elev= 79.93

650' V.C.

VPI STA 26+70.00
Elev= 55.47

-0.50%

+4.84%

+4.84%

+0.50%

VPI STA 35+00.00
Elev= 95.67

SECOND STREET UNDERCROSSING

℄ SECOND ST.
STA 633+64.92

15'-3" Min. VERTICAL CLEARANCE

6'-3"

8'-0"

TRAIL

5TH STREET BRIDGE

MATCH LINE - SEE SHEET P-1

MATCH LINE - SEE SHEET P-3

PROFILE

5TH STREET "F" LINE

110 105 100 95 90 85 80 75 70 65 60 55 50

26+00 28+00 30+00 32+00 34+00 36+00

P-2

FOR REDUCED PLANS
ORIGINAL SCALE IS IN INCHES
0 1 2 3

ALL DIMENSIONS SHOWN IN FEET
UNLESS OTHERWISE NOTED

8/15/2016

...\51\1858f0002.dgn

REVISION #	DATE:	DESCRIPTION AND SHEET NO.:	APPROVED BY:	DATE:

REGISTERED PROFESSIONAL ENGINEER
MEGAN R. CARTER
No. 75885
Exp. 6/30/18
CIVIL
STATE OF CALIFORNIA

PLAN SCALE: 1"=40'
PROFILE SCALE:
HORIZ: 1"=40'
VERT: 1"=10'

CONTRACT NO: 17-XX
DESIGNED: M. CARTER
DRAWN: A. LEE
CHECKED:
RECORD DRAWING: DATE:

DOKKEN ENGINEERING
110 BLUE RAVINE ROAD #200
FOLSOM, CA 95630
PHONE: (916) 858-0642
FAX: (916) 858-0643

CITY OF YUBA CITY

5TH STREET BRIDGE REPLACEMENT

PROFILE

SHEET NO. P-3 OF 215

R= 4026' RT

MATCH LINE - SEE SHEET P-2

MATCH LINE - SEE SHEET P-4

AXIS OF ROTATION

L: ETW & ES -1.5%

R: ETW & ES -2%

4% 2% 0% 2% 4%

SUPERELEVATION

105 100 95 90 85 80 75 70 65 60 55 50 45 40 35 30

MATCH LINE - SEE SHEET P-2

D.S.= 48 MPH
SSD= 402'

650' V.C.

STA 38+25.00 EVC
Elev= 97.29

+0.50%

FG

STA 40+00.00 BVC
Elev= 98.17

D.S.= 80 MPH
SSD= 1132'

1,000' V.C.

VPI STA 45+00.00
Elev= 100.67

+0.50% -0.55%

MATCH LINE - SEE SHEET P-4

OG

FEATHER RIVER

PROFILE

5TH STREET "F" LINE

36+00 38+00 40+00 42+00 44+00 46+00

FOR REDUCED PLANS
ORIGINAL SCALE IS IN INCHES
0 1 2 3
ALL DIMENSIONS SHOWN IN FEET
UNLESS OTHERWISE NOTED

8/15/2016

...\511\1858fa003.dgn

REVISION #	DATE:	DESCRIPTION AND SHEET NO.:	APPROVED BY:	DATE:

REGISTERED PROFESSIONAL ENGINEER
MEGAN R. CARTER
No. 75885
Exp. 6/30/18
CIVIL
STATE OF CALIFORNIA

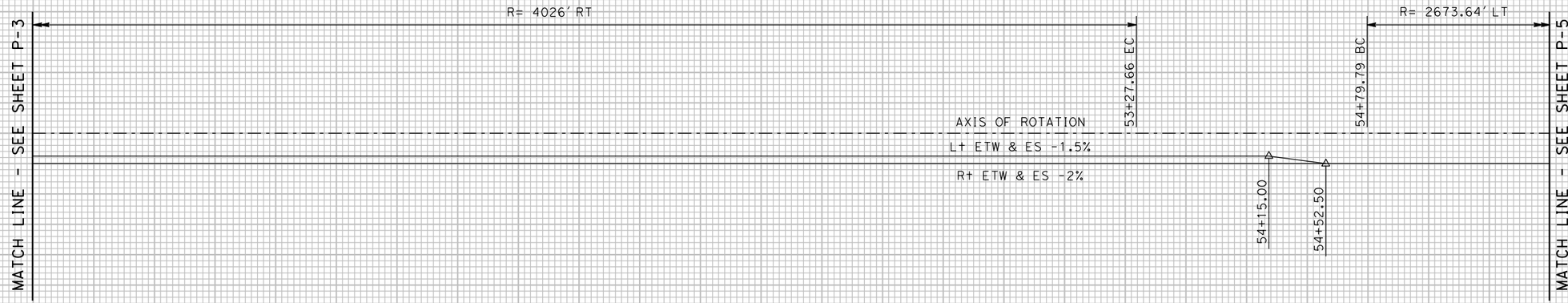

SUPERELEVATION

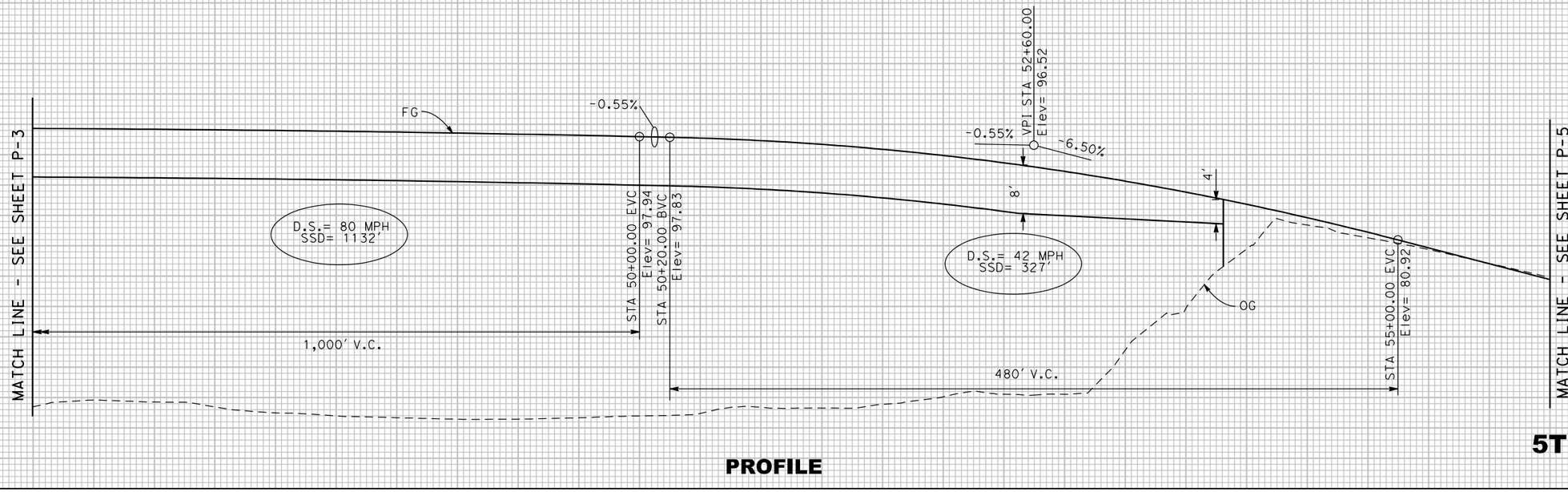

PROFILE

5TH STREET "F" LINE

P-4

FOR REDUCED PLANS ORIGINAL SCALE IS IN INCHES 0 1 2 3

ALL DIMENSIONS SHOWN IN FEET UNLESS OTHERWISE NOTED

8/15/2016

...\51\1858f0004.dgn

PLAN SCALE: 1"=40'
PROFILE SCALE:
HORIZ: 1"=40'
VERT: 1"=10'

CONTRACT NO: 17-XX
DESIGNED: M. CARTER
DRAWN: A. LEE
CHECKED:
RECORD DRAWING: DATE:

DOKKEN ENGINEERING
110 BLUE RAVINE ROAD #200
FOLSOM, CA 95630
PHONE: (916) 858-0642
FAX: (916) 985-1845

CITY OF YUBA CITY

5TH STREET BRIDGE REPLACEMENT

PROFILE

SHEET NO.
OF
215

REVISION #	DATE:	DESCRIPTION AND SHEET NO.:	APPROVED BY:	DATE:

REGISTERED PROFESSIONAL ENGINEER
MEGAN R. CARTER
No. 75885
Exp. 6/30/18
CIVIL
STATE OF CALIFORNIA

PLAN SCALE: 1"=40'
PROFILE SCALE:
HORIZ: 1"=40'
VERT: 1"=10'

CONTRACT NO: 17-XX
DESIGNED: M. CARTER
DRAWN: A. LEE
CHECKED:
RECORD DRAWING: DATE:

DOKKEN ENGINEERING
110 BLUE RAVINE ROAD #200
FOLSOM, CA 95630
PHONE: (916) 858-0642
FAX: (916) 985-1845

CITY OF YUBA CITY

5TH STREET BRIDGE REPLACEMENT

PROFILE

SHEET NO.
OF
215

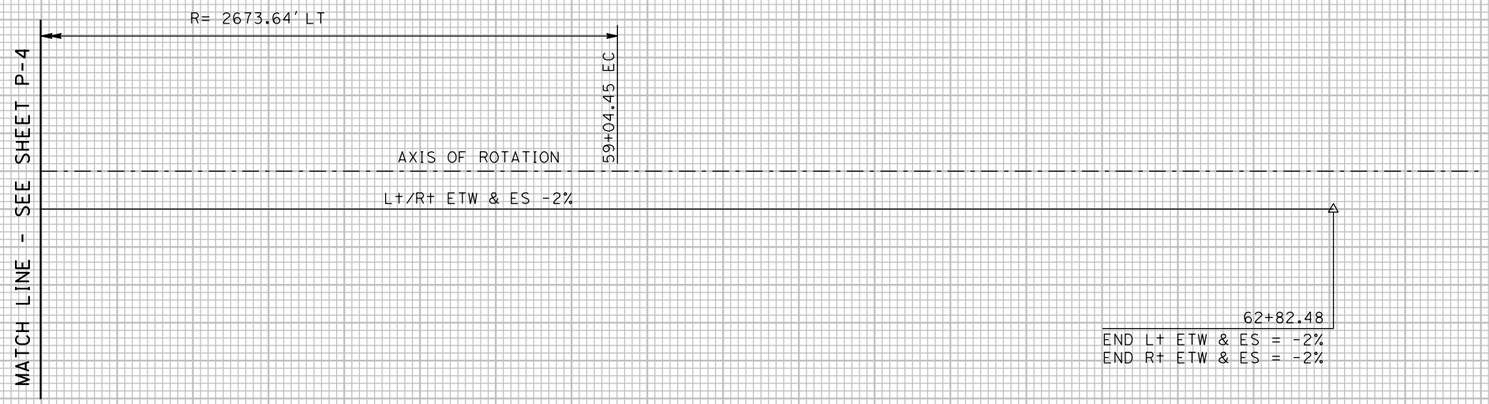

SUPERELEVATION

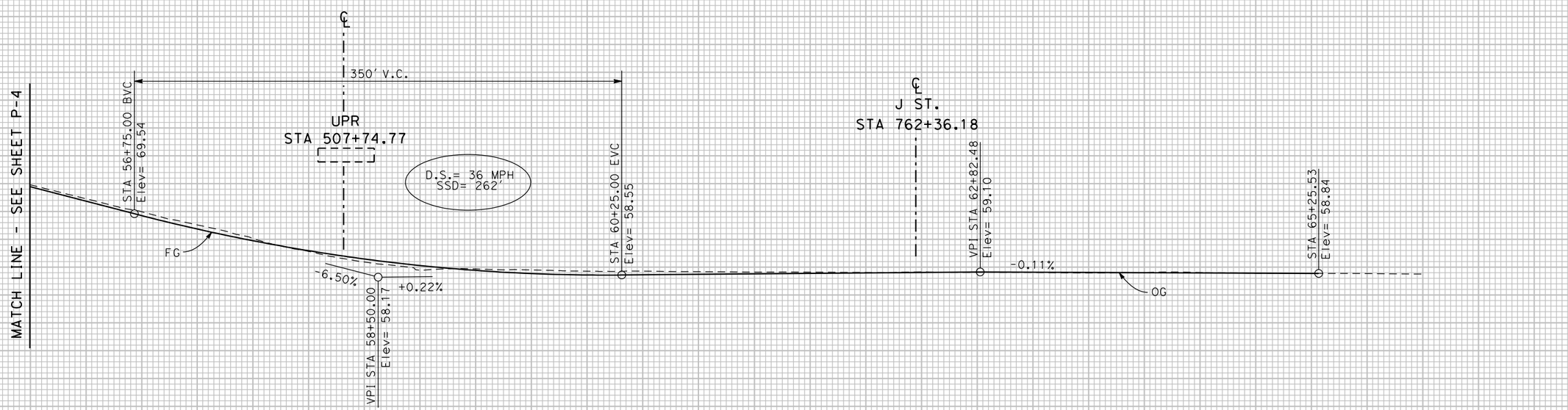

PROFILE - "RIGHT"

5TH STREET "F" LINE

P-5

FOR REDUCED PLANS ORIGINAL SCALE IS IN INCHES 0 1 2 3

ALL DIMENSIONS SHOWN IN FEET UNLESS OTHERWISE NOTED

8/15/2016

...\51\1858f0005.dgn

REVISION #	DATE:	DESCRIPTION AND SHEET NO.:	APPROVED BY:	DATE:

REGISTERED PROFESSIONAL ENGINEER
MEGAN R. CARTER
No. 75885
Exp. 6/30/18
CIVIL
STATE OF CALIFORNIA

PLAN SCALE: 1"=40'
PROFILE SCALE:
HORIZ: 1"=40'
VERT: 1"=10'

CONTRACT NO: 17-XX
DESIGNED: M. CARTER
DRAWN: A. LEE
CHECKED:
RECORD DRAWING: DATE:

DOKKEN ENGINEERING
110 BLUE RAVINE ROAD #200
FOLSOM, CA 95630
PHONE: (916) 858-0642
FAX: (916) 985-1845

CITY OF YUBA CITY

5TH STREET BRIDGE REPLACEMENT

PROFILE

SHEET NO.
OF
215

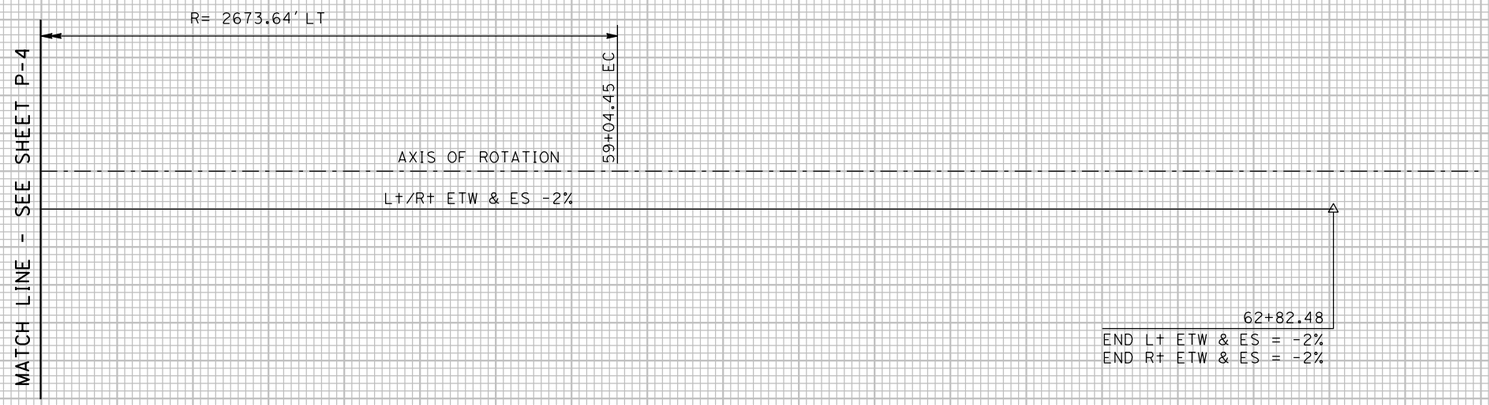

SUPERELEVATION

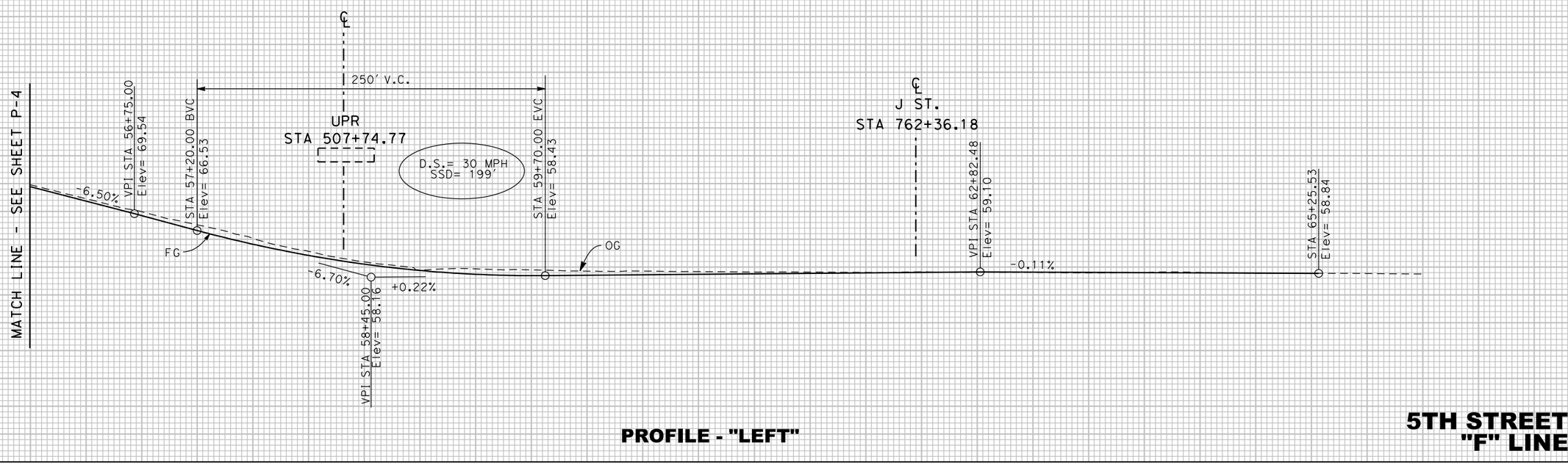

PROFILE - "LEFT"

5TH STREET "F" LINE

P-6

FOR REDUCED PLANS ORIGINAL SCALE IS IN INCHES 0 1 2 3

ALL DIMENSIONS SHOWN IN FEET UNLESS OTHERWISE NOTED

8/15/2016

...\5\1\1858f0006.dgn

REVISION #	DATE:	DESCRIPTION AND SHEET NO.:	APPROVED BY:	DATE:

REGISTERED PROFESSIONAL ENGINEER
MEGAN R. CARTER
No. 75885
Exp. 6/30/18
CIVIL
STATE OF CALIFORNIA

PLAN SCALE: 1"=40'
PROFILE SCALE:
HORIZ: 1"=40'
VERT: 1"=10'

CONTRACT NO: 17-XX
DESIGNED: M. CARTER
DRAWN: A. LEE
CHECKED:
RECORD DRAWING: DATE:

DOKKEN ENGINEERING
110 BLUE RAVINE ROAD #200
FOLSOM, CA 95630
PHONE: (916) 858-0642
FAX: (916) 985-1845

CITY OF YUBA CITY

5TH STREET BRIDGE REPLACEMENT

PROFILE

SHEET NO.
OF
215

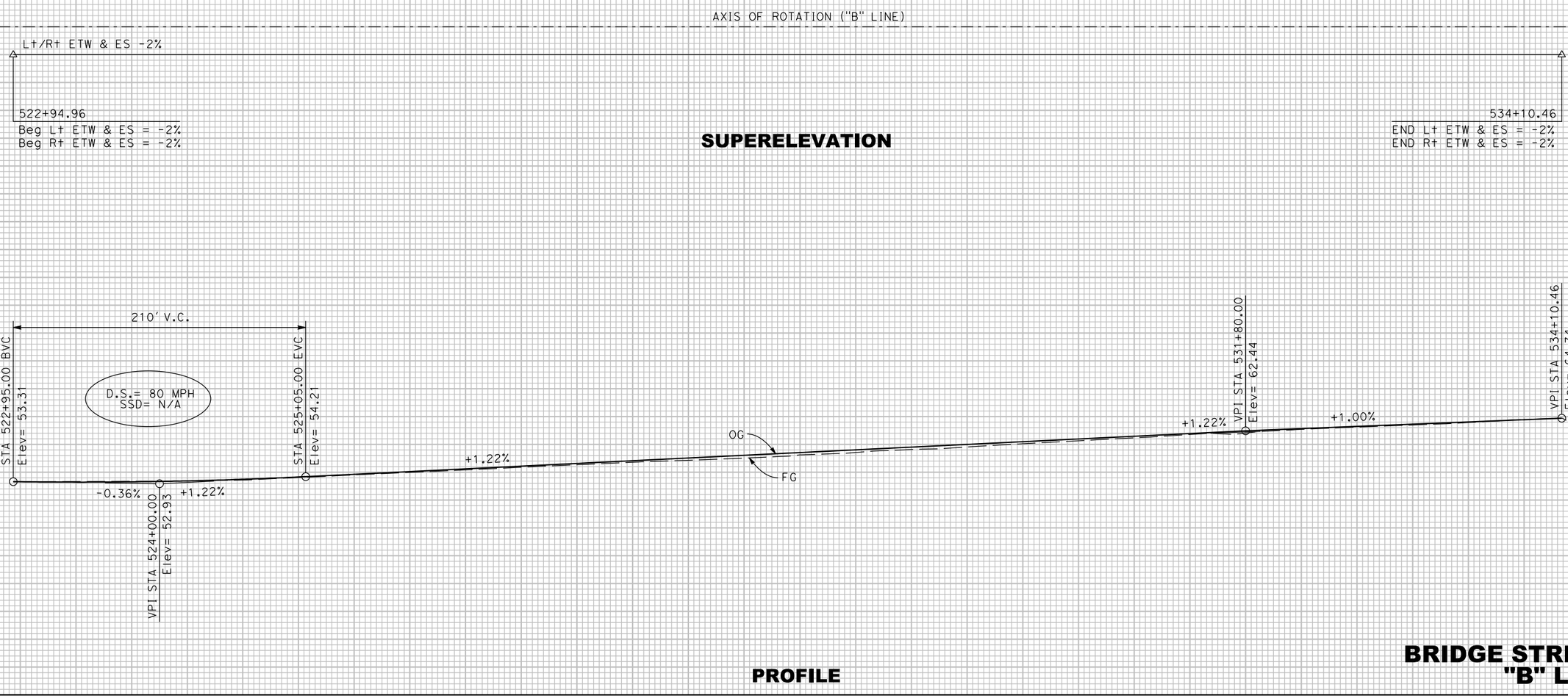

P-7

FOR REDUCED PLANS
ORIGINAL SCALE IS IN INCHES
0 1 2 3
ALL DIMENSIONS SHOWN IN FEET
UNLESS OTHERWISE NOTED

8/15/2016
...\51\1858fa007.dgn

REVISION #	DATE:	DESCRIPTION AND SHEET NO.:	APPROVED BY:	DATE:

REGISTERED PROFESSIONAL ENGINEER
MEGAN R. CARTER
No. 75885
Exp. 6/30/18
CIVIL
STATE OF CALIFORNIA

AXIS OF ROTATION ("J" LINE)

L↑/R↑ ETW & ES -2%

STA 757+14.67
Beg L↑ ETW & ES = -2%
Beg R↑ ETW & ES = -2%

STA 764+57.44
END L↑ ETW & ES = -2%
END R↑ ETW & ES = -2%

SUPERELEVATION

TOP OF CURB
ELEV. LEFT
(ABOVE PROFILE)

+80 59.32
+100 59.19
+120 59.06
+140 58.92
+160 58.79
+180 58.66
+00 58.54
+20 58.42
+40 58.45
+60 58.58
+80 58.43
+100 58.27
+120 58.19
+140 58.20
+160 58.16
+180 58.00

℄ 5TH ST.
STA 62+36.18

D.S.= 80 MPH
SSD= N/A

80' V.C.

+100 57.61
+120 57.69
+140 57.74

VPI STA 757+14.67
Elev= 61.56
-0.39%
VPI STA 758+72.00
Elev= 61.34
-0.67%
VPI STA 760+72.00
Elev= 60.00
-0.67%
-0.61%
FG
OG
VPI STA 762+36.18
Elev= 59.00
-0.61%
-0.69%
STA 762+92.00 BVC
Elev= 58.61
-0.69%
VPI STA 763+32.00
Elev= 58.33
+0.30%
STA 763+72.00 EVC
Elev= 58.45
+0.30%
VPI STA 764+32.00
Elev= 58.63
+0.14%
VPI STA 764+57.44
Elev= 58.66

TOP OF CURB
ELEV. RIGHT
(BELOW PROFILE)

+80 59.34
+100 59.20
+120 59.07
+140 58.94
+160 58.80
+180 58.68
+00 58.55
+20 58.43
+40 58.25
+60 58.02
+80 57.82
+100 57.63
+120 57.83
+140 57.93
+160 57.90
+180 57.50
+100 57.66
+120 57.71
+140 57.74

PROFILE

758+00 760+00 762+00 764+00 766+00

4% 2% 0% 2% 4%

75 70 65 60 55 50

J STREET "J" LINE

FOR REDUCED PLANS
ORIGINAL SCALE IS IN INCHES
0 1 2 3
ALL DIMENSIONS SHOWN IN FEET
UNLESS OTHERWISE NOTED

P-8

PLAN SCALE:
PROFILE SCALE:
HORIZ:
VERT:

CONTRACT NO: 17-XX
DESIGNED: M. CARTER
DRAWN: A. LEE
CHECKED:
RECORD DRAWING:
DATE:

DOKKEN ENGINEERING
110 BLUE RAVINE ROAD #200
FOLSOM, CA 95630
PHONE: (916) 858-0642
FAX: (916) 858-0643

CITY OF YUBA CITY

5TH STREET BRIDGE REPLACEMENT

PROFILE

SHEET NO.
OF
215

8/15/2016

...\511\1858fa008.dgn

REVISION #	DATE:	DESCRIPTION AND SHEET NO.:	APPROVED BY:	DATE:

REGISTERED PROFESSIONAL ENGINEER
MEGAN R. CARTER
No. 75885
Exp. 6/30/18
CIVIL
STATE OF CALIFORNIA

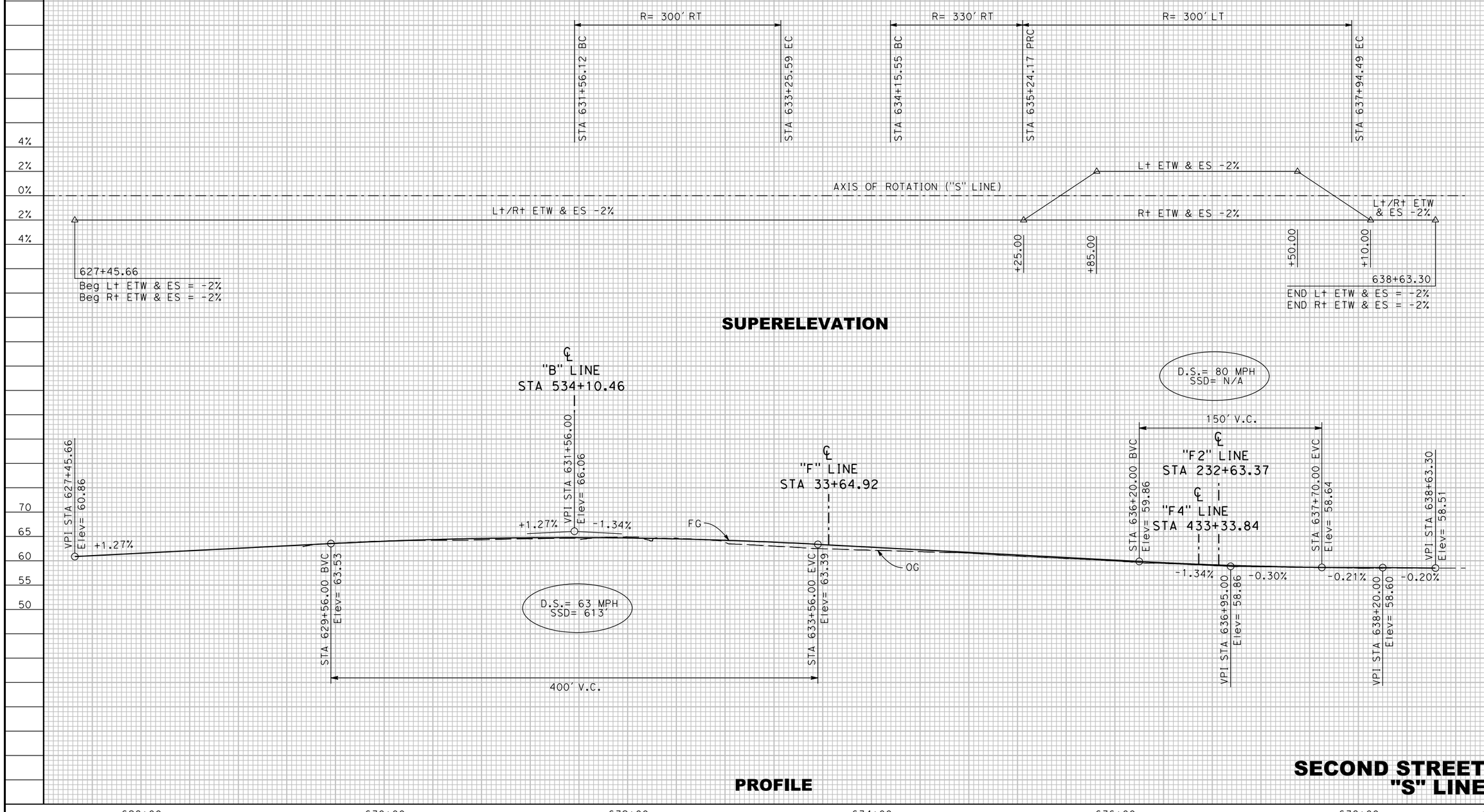

FOR REDUCED PLANS ORIGINAL SCALE IS IN INCHES 0 1 2 3

ALL DIMENSIONS SHOWN IN FEET UNLESS OTHERWISE NOTED

P-9

PLAN SCALE: 1"=40'
PROFILE SCALE:
HORIZ: 1"=40'
VERT: 1"=10'

CONTRACT NO: 17-XX
DESIGNED: M. CARTER
DRAWN: A. LEE
CHECKED:
RECORD DRAWING: DATE:

DOKKEN ENGINEERING
110 BLUE RAVINE ROAD #200
FOLSOM, CA 95630
PHONE: (916) 858-0642
FAX: (916) 858-0643

CITY OF YUBA CITY

5TH STREET BRIDGE REPLACEMENT
PROFILE

SHEET NO. OF 215

8/15/2016

...\511\1858fa009.dgn

REVISION #	DATE:	DESCRIPTION AND SHEET NO.:	APPROVED BY:	DATE:

REGISTERED PROFESSIONAL ENGINEER
MEGAN R. CARTER
No. 75885
Exp. 6/30/18
CIVIL
STATE OF CALIFORNIA

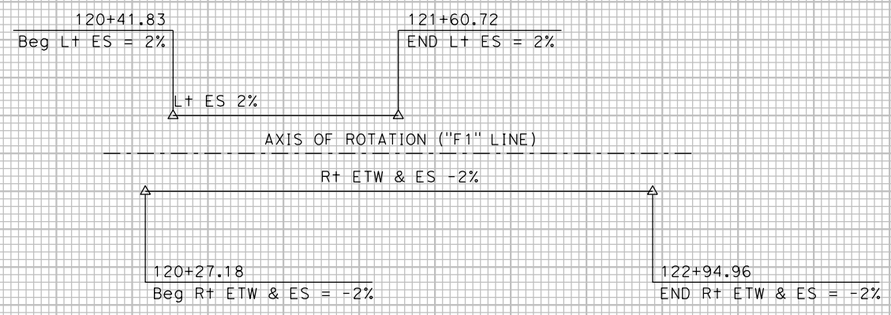

SUPERELEVATION

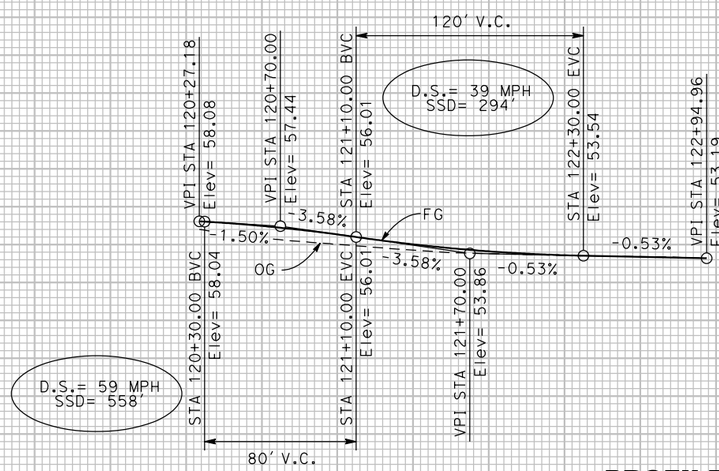

PROFILE

EASTBOUND OFF RAMP "F1" LINE

P-10

FOR REDUCED PLANS ORIGINAL SCALE IS IN INCHES 0 1 2 3 ALL DIMENSIONS SHOWN IN FEET UNLESS OTHERWISE NOTED

PLAN SCALE: 1"=40'
PROFILE SCALE:
HORIZ: 1"=40'
VERT: 1"=10'

CONTRACT NO: 17-XX
DESIGNED: M. CARTER
DRAWN: A. LEE
CHECKED:
RECORD DRAWING: DATE:

DOKKEN ENGINEERING
110 BLUE RAVINE ROAD #200
FOLSOM, CA 95630
PHONE: (916) 858-0642
FAX: (916) 985-1845

CITY OF YUBA CITY

5TH STREET BRIDGE REPLACEMENT

PROFILE

SHEET NO.
OF
215

8/15/2016

...\51\1858fa010.dgn

REVISION #	DATE:	DESCRIPTION AND SHEET NO.:	APPROVED BY:	DATE:

REGISTERED PROFESSIONAL ENGINEER
MEGAN R. CARTER
No. 75885
Exp. 6/30/18
CIVIL
STATE OF CALIFORNIA

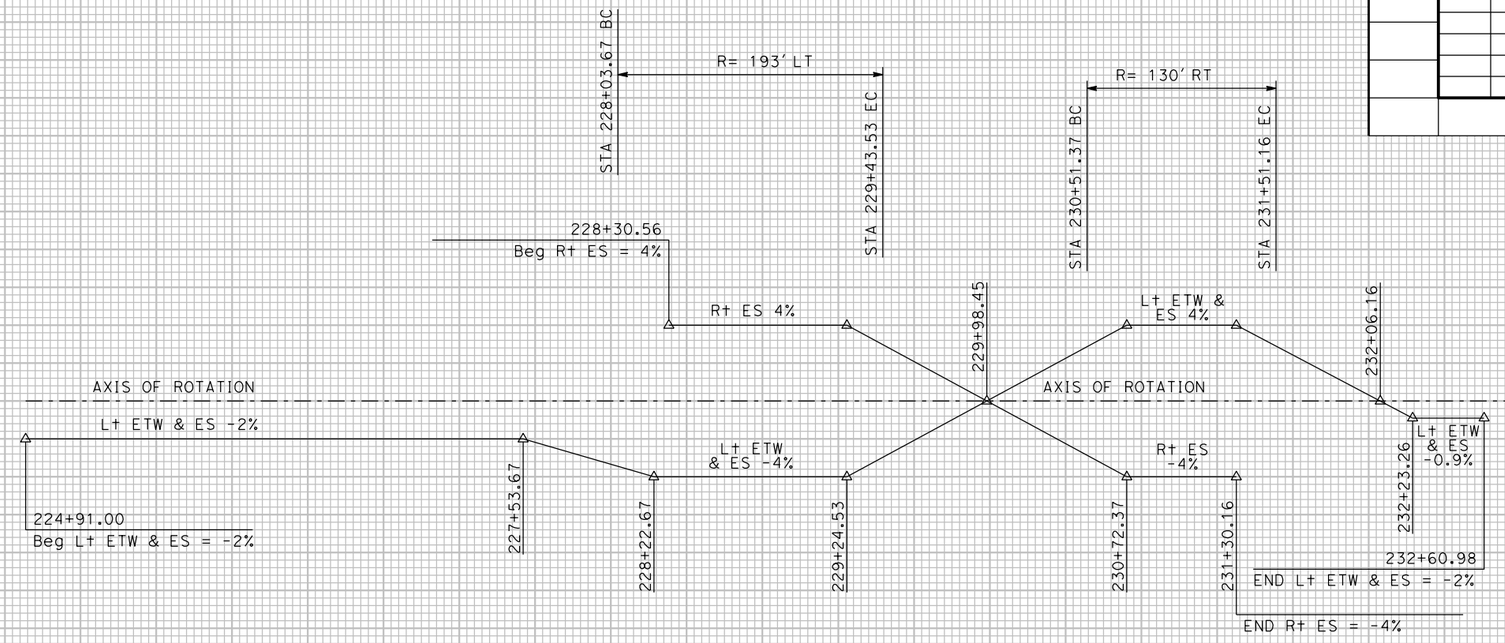

SUPERELEVATION

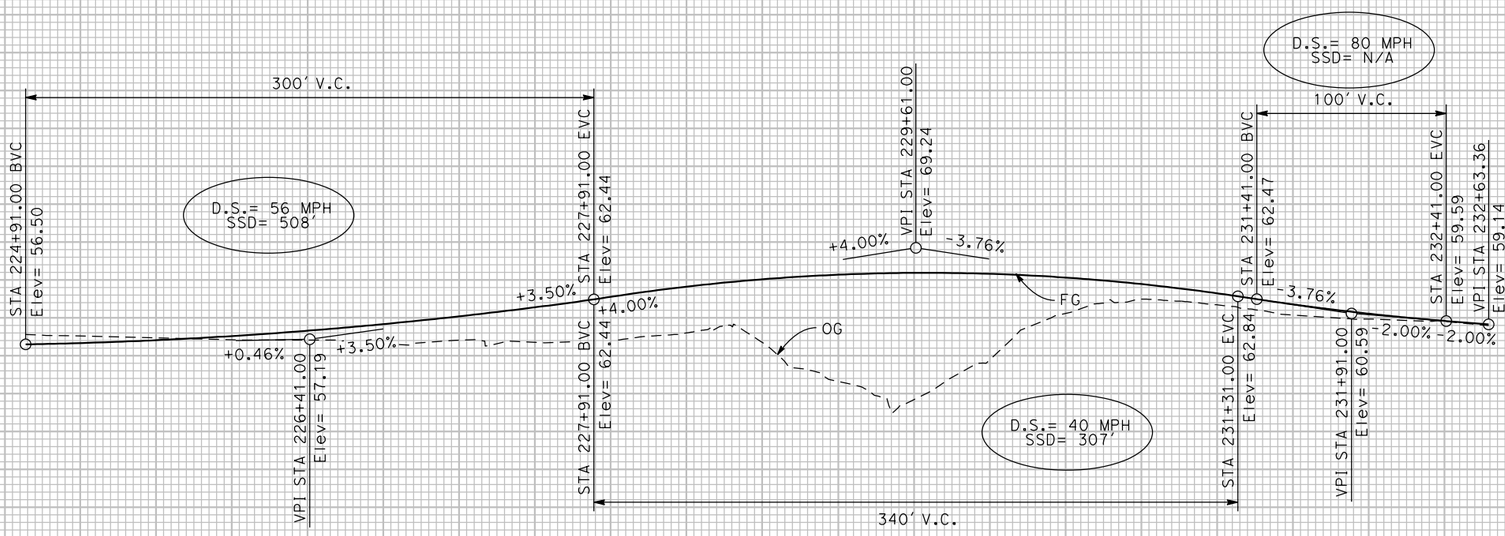

PROFILE

224+00 226+00 228+00 230+00 232+00

WB ON-RAMP "F2" LINE

FOR REDUCED PLANS ORIGINAL SCALE IS IN INCHES 0 1 2 3

ALL DIMENSIONS SHOWN IN FEET UNLESS OTHERWISE NOTED

P-11

PLAN SCALE: 1"=40'
PROFILE SCALE:
HORIZ: 1"=40'
VERT: 1"=10'

CONTRACT NO: 17-XX
DESIGNED: M. CARTER
DRAWN: A. LEE
CHECKED:
RECORD DRAWING: DATE:

DOKKEN ENGINEERING
110 BLUE RAVINE ROAD #200
FOLSOM, CA 95630
PHONE: (916) 858-0642
FAX: (916) 985-1845

CITY OF YUBA CITY

5TH STREET BRIDGE REPLACEMENT

PROFILE

SHEET NO.
OF
215

8/15/2016

...\51\1858f0011.dgn

REVISION #	DATE:	DESCRIPTION AND SHEET NO.:	APPROVED BY:	DATE:

REGISTERED PROFESSIONAL ENGINEER
MEGAN R. CARTER
No. 75885
Exp. 6/30/18
CIVIL
STATE OF CALIFORNIA

PLAN SCALE: 1"=40'
PROFILE SCALE:
HORIZ: 1"=40'
VERT: 1"=10'

CONTRACT NO: 17-XX
DESIGNED: M. CARTER
DRAWN: A. LEE
CHECKED:
RECORD DRAWING: DATE:

DOKKEN ENGINEERING
110 BLUE RAVINE ROAD 1200
FOLSOM, CA 95630
PHONE: (916) 858-0642
FAX: (916) 985-1845

CITY OF YUBA CITY

5TH STREET BRIDGE REPLACEMENT

PROFILE

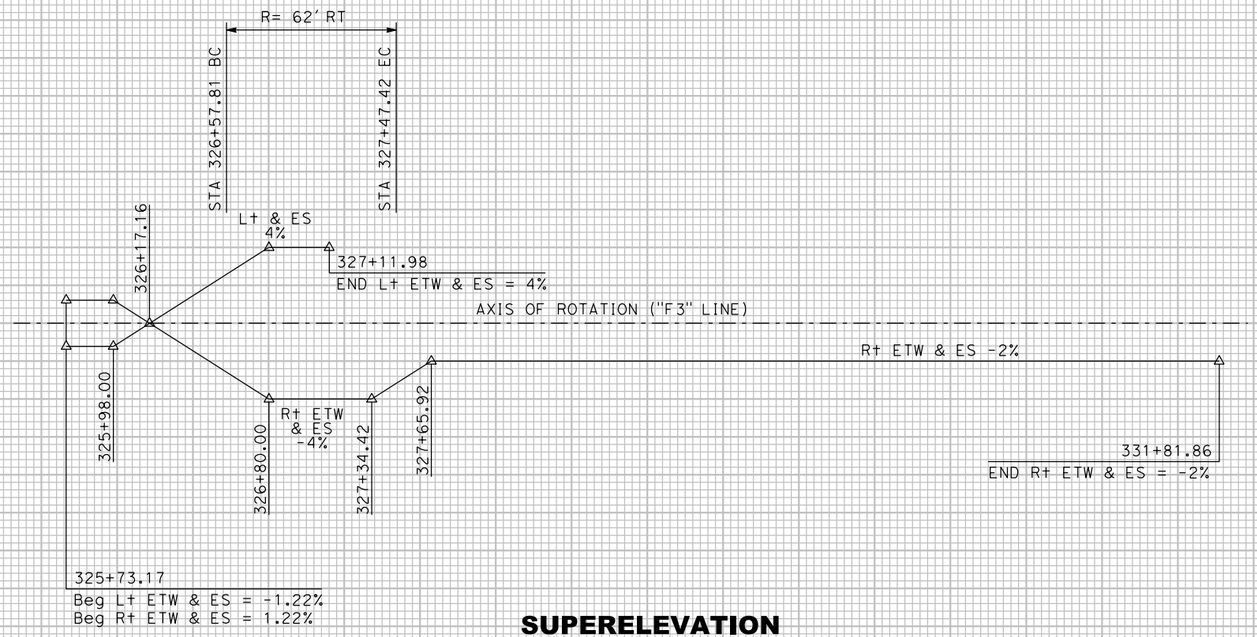

SUPERELEVATION

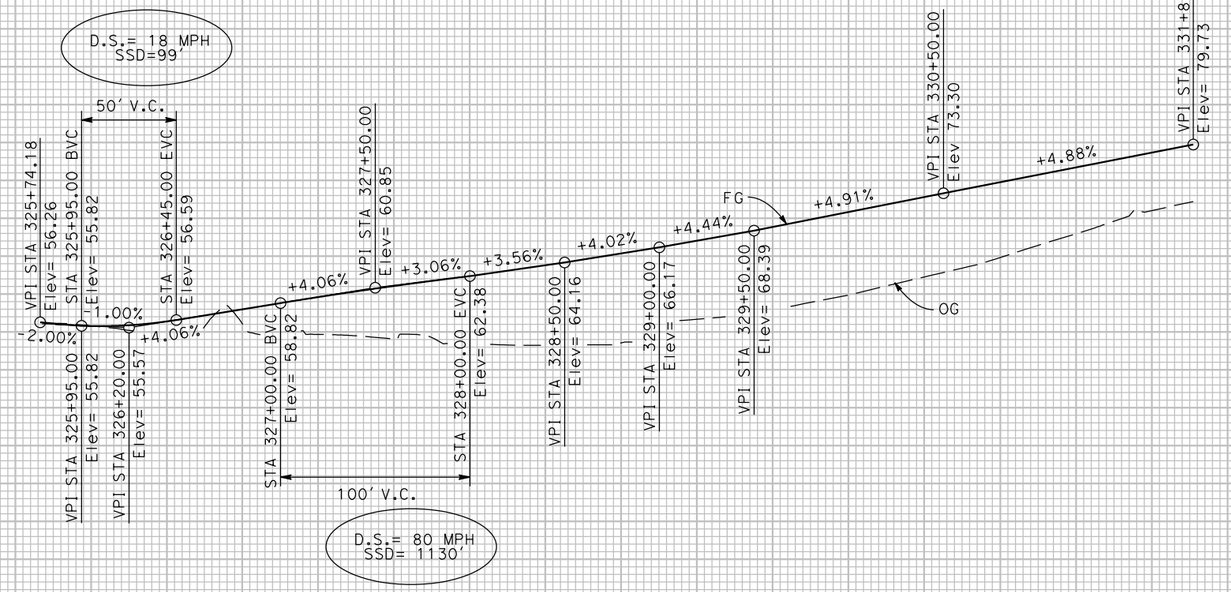

PROFILE

EB ON-RAMP "F3" LINE

FOR REDUCED PLANS ORIGINAL SCALE IS IN INCHES 0 1 2 3

ALL DIMENSIONS SHOWN IN FEET UNLESS OTHERWISE NOTED

P-12

SHEET NO. OF 215

8/15/2016

...\51\1858f0012.dgn

REVISION #	DATE:	DESCRIPTION AND SHEET NO.:	APPROVED BY:	DATE:

REGISTERED PROFESSIONAL ENGINEER
MEGAN R. CARTER
No. 75885
Exp. 6/30/18
CIVIL
STATE OF CALIFORNIA

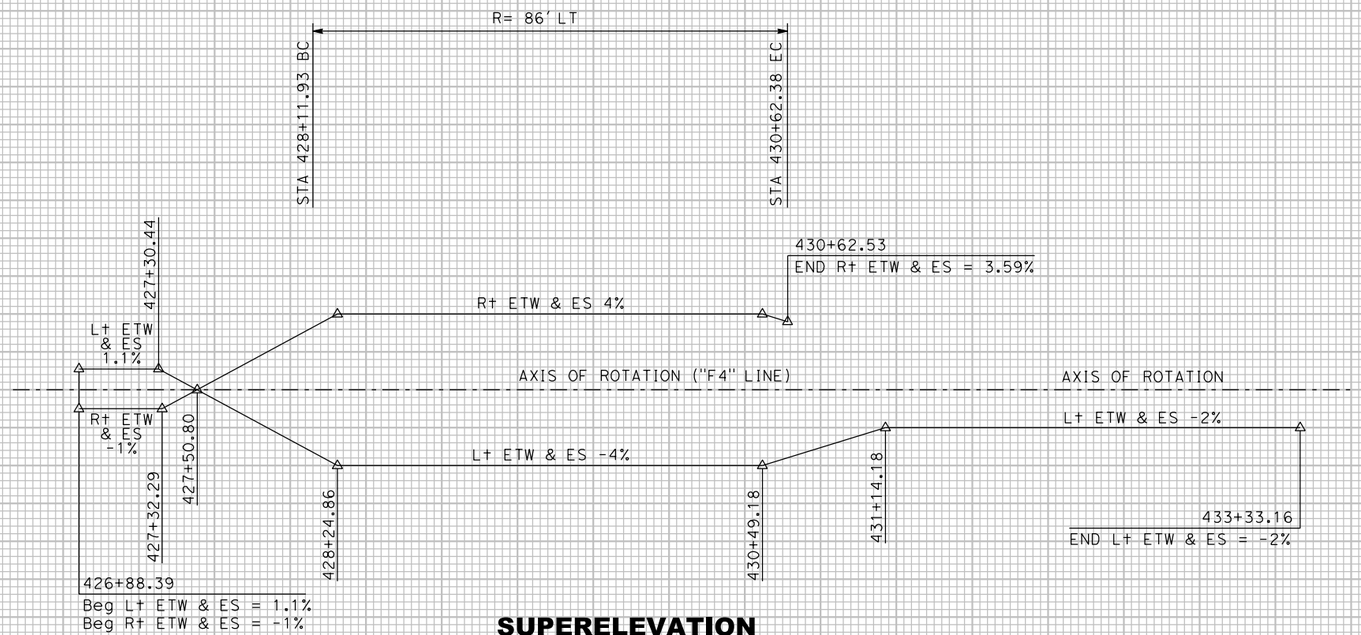

SUPERELEVATION

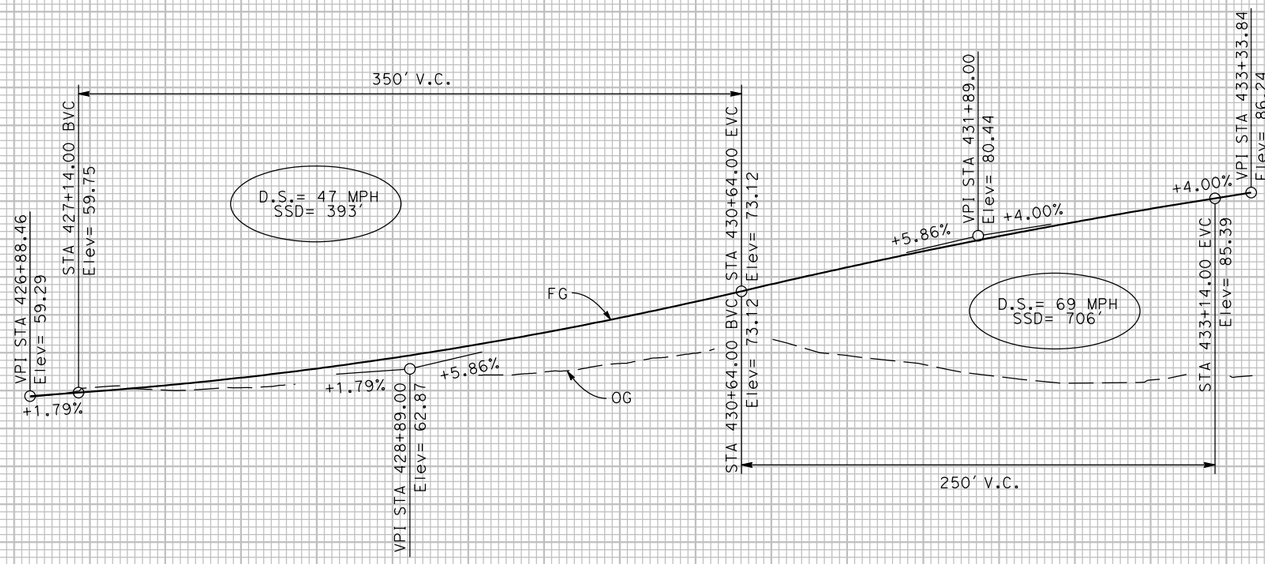

PROFILE

WB OFF-RAMP "F4" LINE

FOR REDUCED PLANS ORIGINAL SCALE IS IN INCHES 0 1 2 3

ALL DIMENSIONS SHOWN IN FEET UNLESS OTHERWISE NOTED

P-13

SHEET NO. OF 215

PLAN SCALE: 1"=40'
PROFILE SCALE:
HORIZ: 1"=40'
VERT: 1"=10'

CONTRACT NO: 17-XX
DESIGNED: M. CARTER
DRAWN: A. LEE
CHECKED:
RECORD DRAWING: DATE:

DOKKEN ENGINEERING
110 BLUE RAVINE ROAD 1200
FOLSOM, CA 95630
PHONE: (916) 858-0642
FAX: (916) 985-1845

CITY OF YUBA CITY

5TH STREET BRIDGE REPLACEMENT

PROFILE

8/15/2016

...\51\1858fa0l3.dgn

REVISION #	DATE:	DESCRIPTION AND SHEET NO.:	APPROVED BY:	DATE:

REGISTERED PROFESSIONAL ENGINEER
MEGAN R. CARTER
No. 75885
Exp. 6/30/18
CIVIL
STATE OF CALIFORNIA

PLAN SCALE: 1"=40'
PROFILE SCALE:
HORIZ:
VERT:

CONTRACT NO: 17-XX
DESIGNED: M. CARTER
DRAWN: A. LEE
CHECKED:
RECORD DRAWING:
DATE:

DOKKEN ENGINEERING
110 BLUE RAVINE ROAD #200
FOLSOM, CA 95630
PHONE: (916) 858-0642
FAX: (916) 985-1845

CITY OF YUBA CITY

5TH STREET BRIDGE REPLACEMENT

REMOVAL PLAN

SHEET NO.
OF
215

LEGEND:

- REMOVE ASPHALT CONCRETE PAVEMENT
- REMOVE CONCRETE (CURB, GUTTER AND SIDEWALK)
- REMOVE CONCRETE (CURB AND GUTTER)
- REMOVE CONCRETE CURB AND SIDEWALK
- REMOVE CONCRETE CURB
- REMOVE HMA DIKE

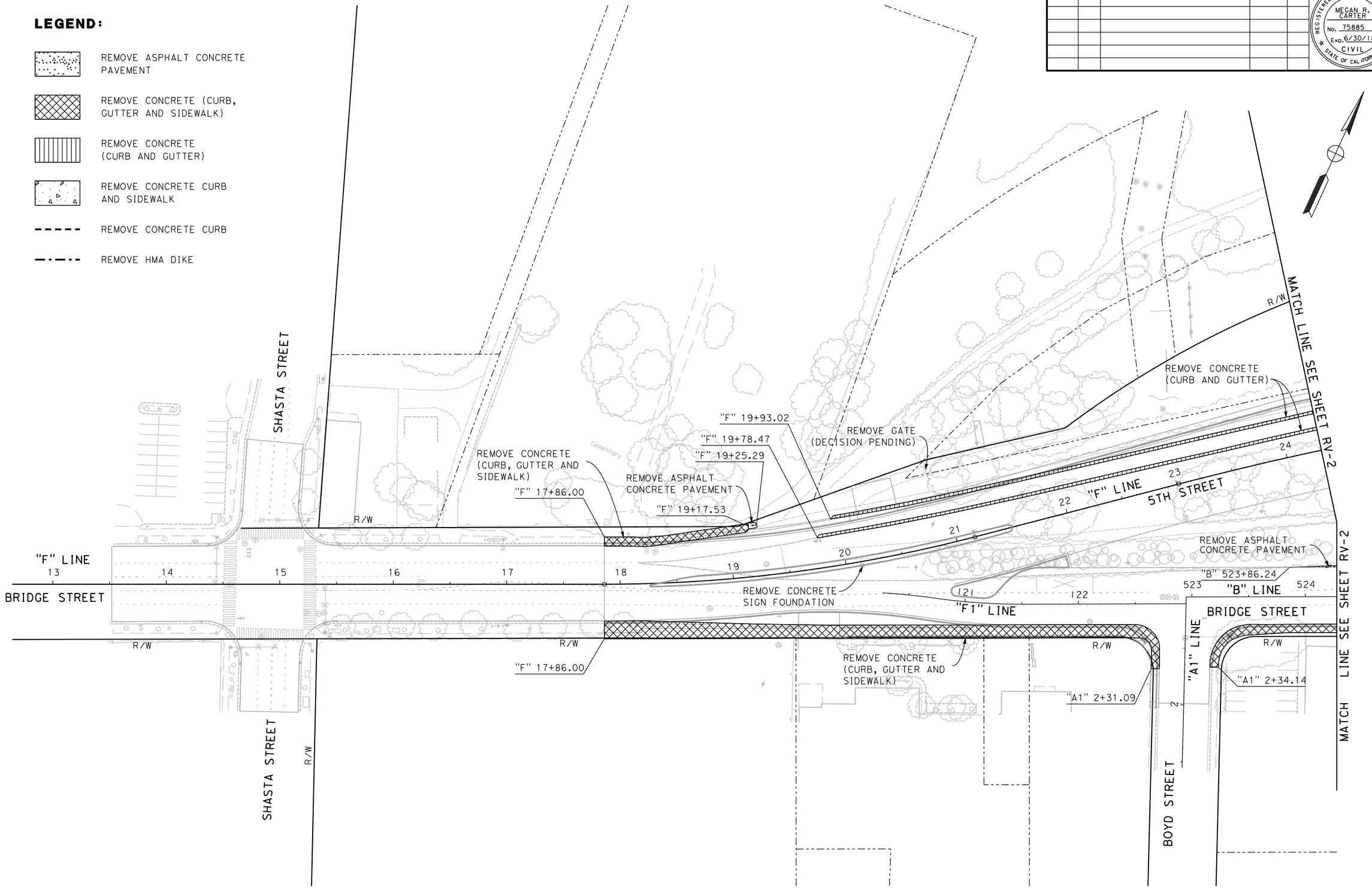

RV-1

FOR REDUCED PLANS ORIGINAL SCALE IS IN INCHES
0 1 2 3
ALL DIMENSIONS SHOWN IN FEET UNLESS OTHERWISE NOTED

8/15/2016
...\511\1858fg001.dgn

REVISION #	DATE	DESCRIPTION AND SHEET NO.	APPROVED BY	DATE

REGISTERED PROFESSIONAL ENGINEER
MEGAN R. CARTER
No. 75885
Exp. 6/30/18
CIVIL
STATE OF CALIFORNIA

"S" 638+38.15

REMOVE CONCRETE (CURB, GUTTER AND SIDEWALK)

SUTTER STREET

"S" 638+38.15

REMOVE CONCRETE (CURB, GUTTER AND SIDEWALK)

"S" 636+80.15

"S" 636+40.71

"S" 636+22.41 30.21' RT
END REMOVE FENCE

"S" 635+80.50 30.21' RT
BEGIN REMOVE FENCE

REMOVE RETAINING WALL #3, SEE STRUCTURE REMOVAL PLANS

"S" 637+25.74

"F4" 428+70.22 11.58' RT
BEGIN REMOVE GUARDRAIL

REMOVE CONCRETE CURB AND SIDEWALK

"S" LINE

R/W

"F4" 430+13.96 17.50' RT
END REMOVE GUARDRAIL

REMOVE CONCRETE CURB

"F" 31+79.34

"F4" LINE

431 WB OFF-RAMP

"F" 31+83.22

"F" 33+13.43

REMOVE CONCRETE (CURB, GUTTER AND SIDEWALK)

REMOVE GATE

REMOVE CONCRETE (CURB AND GUTTER)

"F" 30+58.02

226 WB ON-RAMP 227 "F2" LINE 228

"F" LINE

5TH STREET

"F3" LINE EB ON-RAMP

REMOVE CONCRETE (CURB AND GUTTER)

REMOVE CONCRETE CURB

"F" 32+71.52 40.86' RT
BEGIN REMOVE GUARDRAIL

"F" 33+20.35

"F" 33+27.19 48.02' RT
END REMOVE GUARDRAIL

"F3" 326+76.51

REMOVE BRIDGE No. 18C-0023, SEE STRUCTURE REMOVAL PLANS

REMOVE RETAINING WALL #1, SEE STRUCTURE REMOVAL PLANS

"F3" 326+19.44

REMOVE RETAINING WALL #2, SEE STRUCTURE REMOVAL PLANS

REMOVE CONCRETE CURB AND ASPHALT CONCRETE PAVEMENT

"B" 533+44.67

SECOND STREET

REMOVE BRIDGE No. 18C-0055, SEE STRUCTURE REMOVAL PLANS

REMOVE BRIDGE No. 18C-0018, SEE STRUCTURE REMOVAL PLANS

"S" 631+67.55

"B" 525+58.39

"B" 526+32.07

"B" 527+39.33

"B" 524+83.87

REMOVE ASPHALT CONCRETE PAVMENT

BRIDGE STREET

"B" LINE

REMOVE CONCRETE CURB AND SIDEWALK

REMOVE ASPHALT CONCRETE PAVMENT

"B" 526+69.01

"B" 526+84.37

REMOVE CONCRETE (CURB AND GUTTER)

"B" 528+96.34

REMOVE CONCRETE (CURB, GUTTER AND SIDEWALK)

"B" 529+57.03

"B" 530+31.06

"B" 531+16.79

"B" 531+26.79

"B" 531+88.52

"B" 532+30.73

"B" 532+05.59

"B" 533+75.42

REMOVE CONCRETE (CURB, GUTTER AND SIDEWALK)

REMOVE CONCRETE (CURB AND GUTTER)

MATCH LINE SEE SHEET RV-1

MATCH LINE SEE SHEET RV-3

MATCH LINE SEE SHEET RV-1

FOR REDUCED PLANS ORIGINAL SCALE IS IN INCHES 0 1 2 3

ALL DIMENSIONS SHOWN IN FEET UNLESS OTHERWISE NOTED

RV-2

PLAN SCALE: 1"=40'
PROFILE SCALE:
HORIZ:
VERT:

CONTRACT NO: 17-XX
DESIGNED: M. CARTER
DRAWN: A. LEE
CHECKED:
RECORD DRAWING: DATE:

DOKKEN ENGINEERING
110 BLUE RAVINE ROAD #200
FOLSOM, CA 95630
PHONE: (916) 858-0642
FAX: (916) 985-8643

CITY OF YUBA CITY

5TH STREET BRIDGE REPLACEMENT
REMOVAL PLAN

SHEET NO.
OF
215

8/15/2016

...\511\1858fg002.dgn

REVISION #	DATE:	DESCRIPTION AND SHEET NO.:	APPROVED BY:	DATE:

REGISTERED PROFESSIONAL ENGINEER
MEGAN R. CARTER
No. 75885
Exp. 6/30/18
CIVIL
STATE OF CALIFORNIA

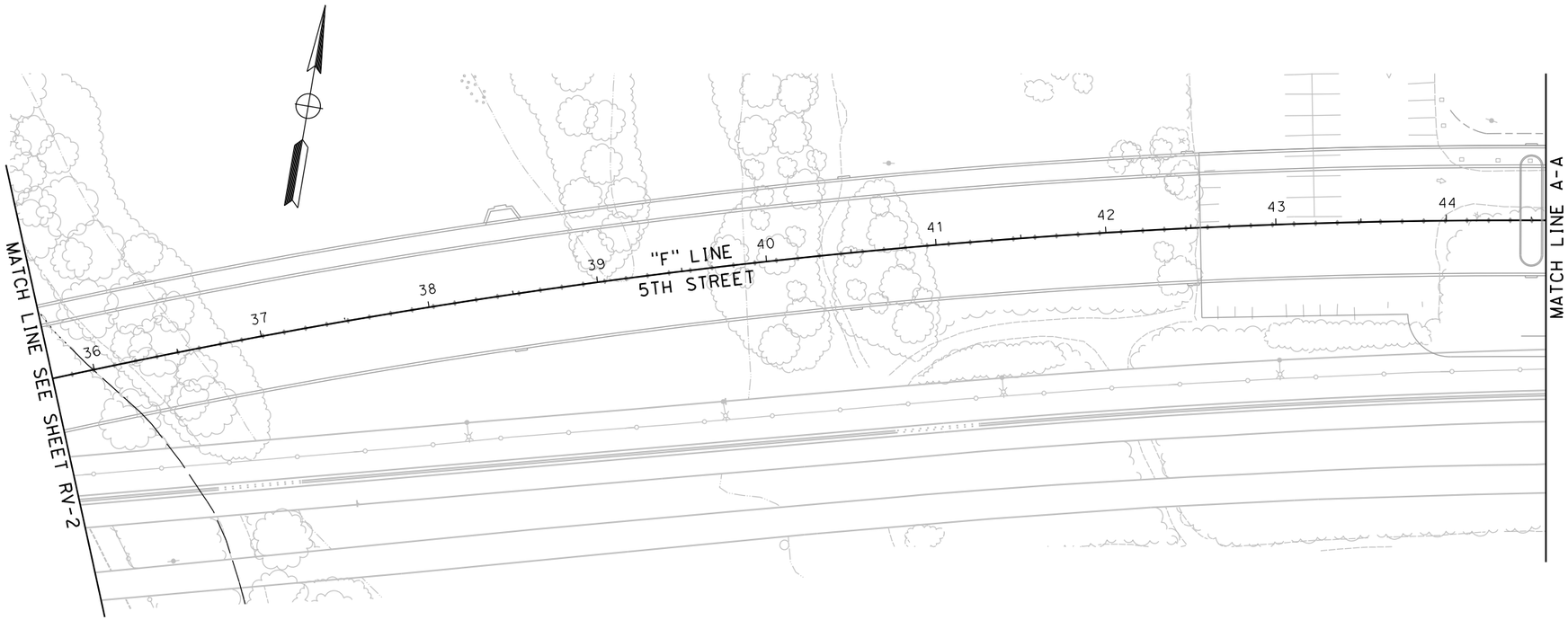

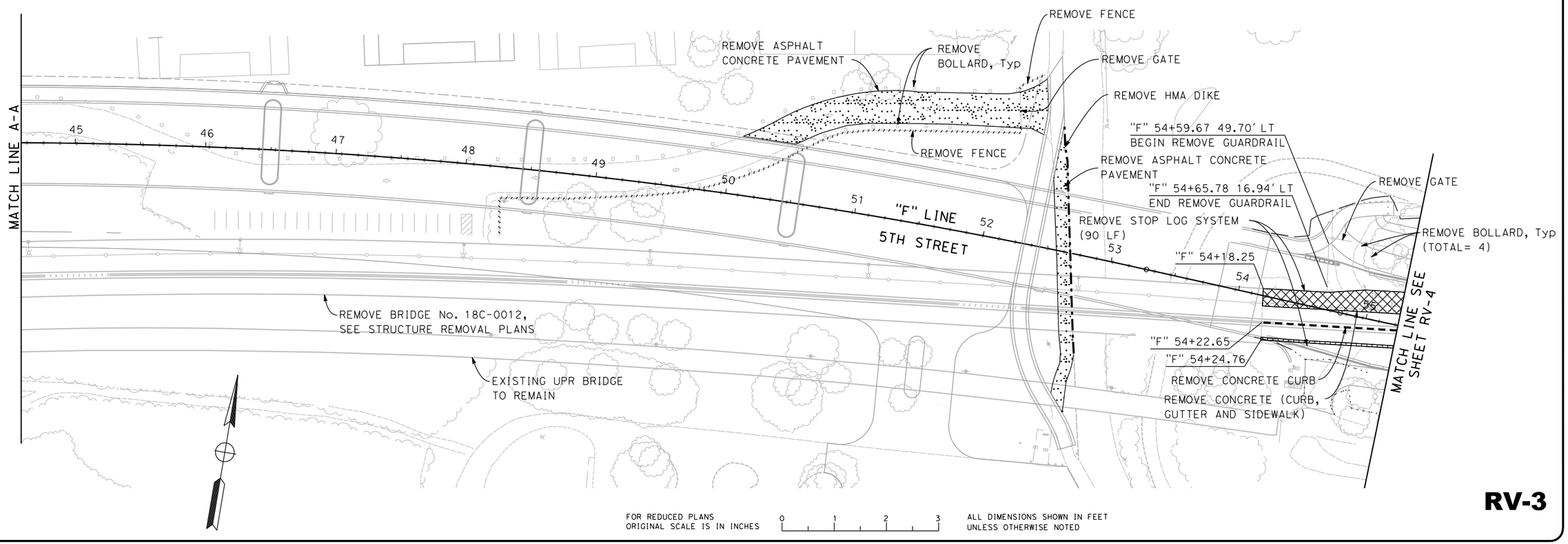

FOR REDUCED PLANS ORIGINAL SCALE IS IN INCHES 0 1 2 3

ALL DIMENSIONS SHOWN IN FEET UNLESS OTHERWISE NOTED

RV-3

PLAN SCALE: 1"=40'
PROFILE SCALE:
HORIZ:
VERT:

CONTRACT NO: 17-XX
DESIGNED: M. CARTER
DRAWN: A. LEE
CHECKED:
RECORD DRAWING:
DATE:

DOKKEN ENGINEERING
110 BLUE RAVINE ROAD #200
FOLSOM, CA 95630
PHONE: (916) 858-0642
FAX: (916) 858-0643

CITY OF YUBA CITY

5TH STREET BRIDGE REPLACEMENT

REMOVAL PLAN

SHEET NO.
OF
215

8/15/2016

...\511\1858fg003.dgn

REVISION #	DATE:	DESCRIPTION AND SHEET NO.:	APPROVED BY:	DATE:

REGISTERED PROFESSIONAL ENGINEER
MEGAN R. CARTER
No. 75885
Exp. 6/30/18
CIVIL
STATE OF CALIFORNIA

PLAN SCALE: 1"=40'
PROFILE SCALE:
HORIZ:
VERT:

CONTRACT NO: 17-XX
DESIGNED: M. CARTER
DRAWN: A. LEE
CHECKED:
RECORD DRAWING:
DATE:

DOKKEN ENGINEERING
110 BLUE RAVINE ROAD #200
FOLSOM, CA 95630
PHONE: (916) 858-0642
FAX: (916) 985-1845

CITY OF YUBA CITY

5TH STREET BRIDGE REPLACEMENT

REMOVAL PLAN

SHEET NO.
OF
215

RV-4

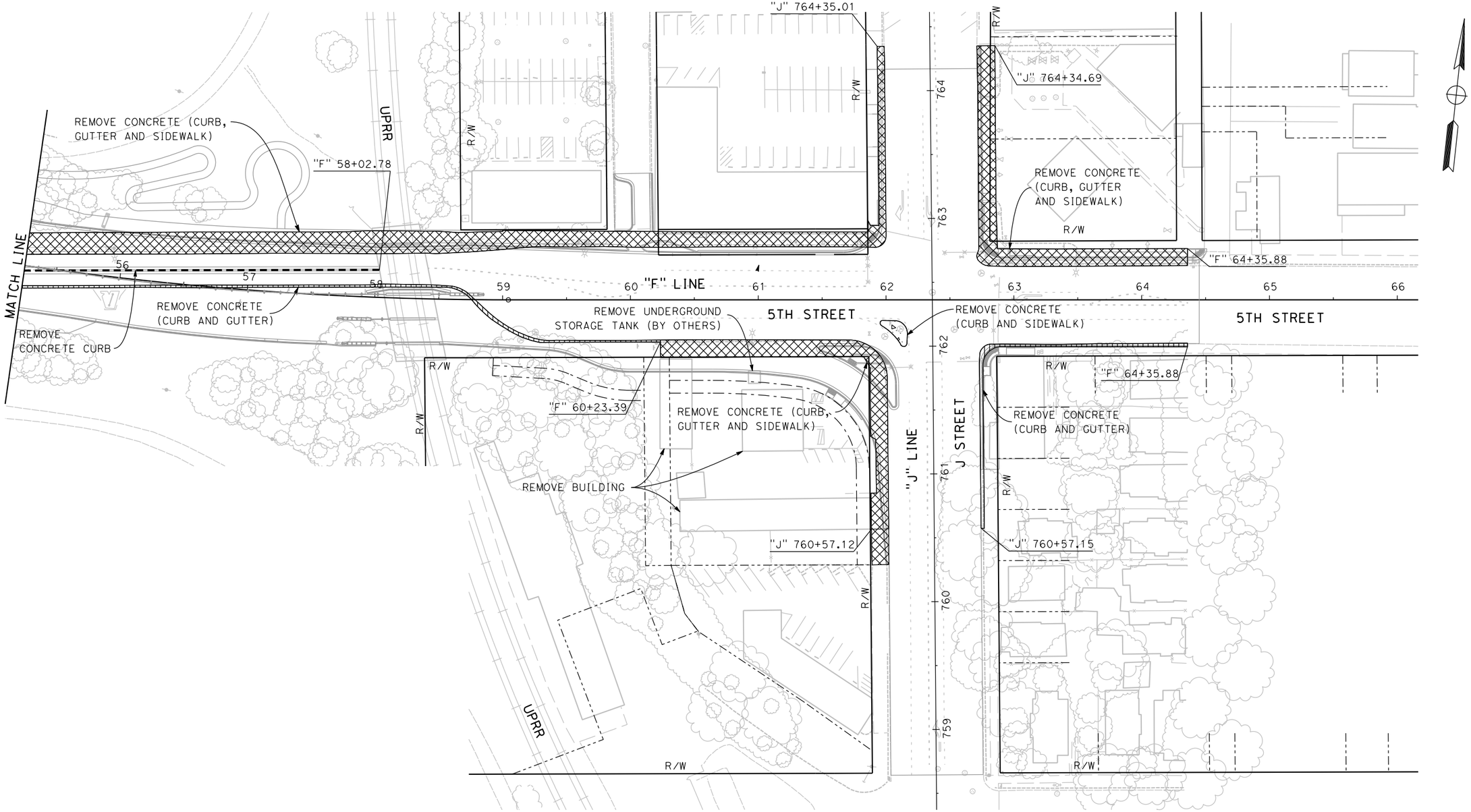

FOR REDUCED PLANS
ORIGINAL SCALE IS IN INCHES
0 1 2 3
ALL DIMENSIONS SHOWN IN FEET
UNLESS OTHERWISE NOTED

8/15/2016

...\511\1858fg004.dgn

CURVE DATA				
No	RADIUS (ft)	DELTA	TANGENT (ft)	LENGTH (ft)
1	1329.00	5° 50′ 44"	67.85	135.59
2	550.00	14° 44′ 18"	71.13	141.48
3	558.00	9° 00′ 48"	43.98	87.78
4	2.00	81° 22′ 31"	1.72	2.84
5	35.00	91° 30′ 59"	35.94	55.90
6	4.50	160° 37′ 16"	26.36	12.62
7	15.50	51° 25′ 09"	7.46	13.91
8	42.00	47° 43′ 34"	18.58	34.99
9	1332.00	3° 44′ 06"	43.43	86.83
10	1295.00	5° 34′ 07"	62.98	125.86
11	1.00	169° 42′ 10"	11.10	2.96
12	156.61	8° 06′ 26"	11.10	22.16

CURVE DATA				
No	RADIUS (ft)	DELTA	TANGENT (ft)	LENGTH (ft)
13	1326.00	9° 40′ 8"	112.15	223.77
14	3.47	177° 43′ 16"	174.52	10.77
15	1298.00	14° 08′ 16"	160.96	320.28
16	965.55	08° 54′ 59"	75.28	150.26
17	1292.00	01° 16′ 34"	14.39	28.78

REVISION #	DATE:	DESCRIPTION AND SHEET NO.:	APPROVED BY:	DATE:

REGISTERED PROFESSIONAL ENGINEER
AMANDA J. LEE
No. 84180
Exp. 9-30-17
CIVIL
STATE OF CALIFORNIA

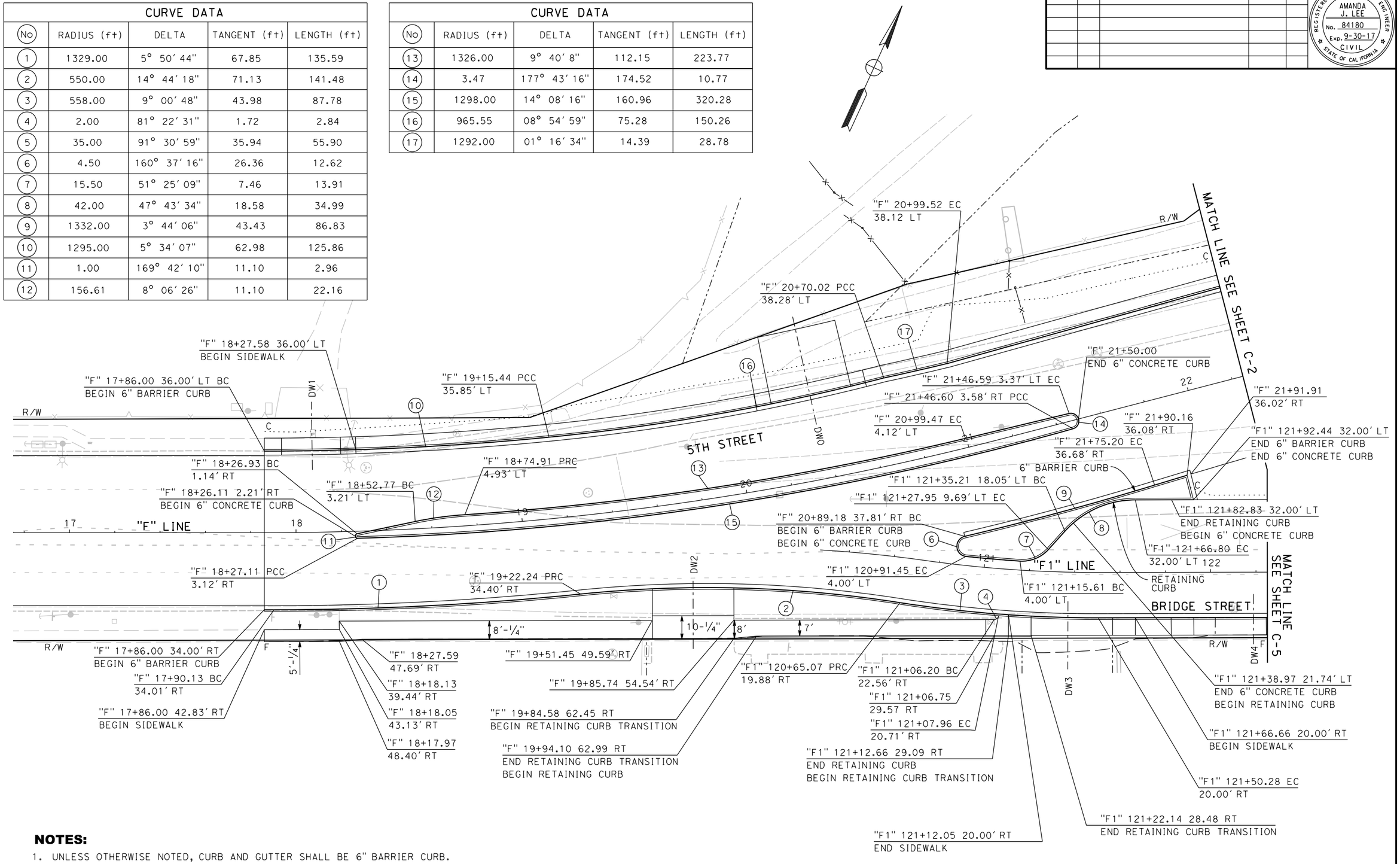

NOTES:

1. UNLESS OTHERWISE NOTED, CURB AND GUTTER SHALL BE 6" BARRIER CURB.
2. FOR RETAINING CURB, SEE SHEET C-14.
3. FOR HARDSCAPE DETAILS, SEE TJ SHEETS.

FOR REDUCED PLANS
ORIGINAL SCALE IS IN INCHES

0 1 2 3

ALL DIMENSIONS SHOWN IN FEET
UNLESS OTHERWISE NOTED

PLAN SCALE: 1"=20'
PROFILE SCALE:
HORIZ:
VERT:

CONTRACT NO: 17-XX
DESIGNED: A. LEE
DRAWN: A. LEE
CHECKED:
RECORD DRAWING:
DATE:

DOKKEN ENGINEERING
110 BLUE RAVINE ROAD #200
FOLSOM, CA 95630
PHONE: (916) 858-0642
FAX: (916) 985-1845

CITY OF YUBA CITY

5TH STREET BRIDGE REPLACEMENT
CONSTRUCTION DETAILS

SHEET NO.
OF
215

C-1

8/15/2016

...\511\1858ga001.dgn

REVISION #	DATE:	DESCRIPTION AND SHEET NO.:	APPROVED BY:	DATE:

REGISTERED PROFESSIONAL ENGINEER
AMANDA J. LEE
No. 84180
Exp. 9-30-17
CIVIL
STATE OF CALIFORNIA

CURVE DATA				
No	RADIUS (ft)	DELTA	TANGENT (ft)	LENGTH (ft)
1	40.00	172° 30′ 34"	611.05	120.43
2	67.00	16° 58′ 43"	10.00	19.85
3	4.00	144° 07′ 06"	12.35	10.06
4	3072.00	01° 22′ 20"	36.79	73.58

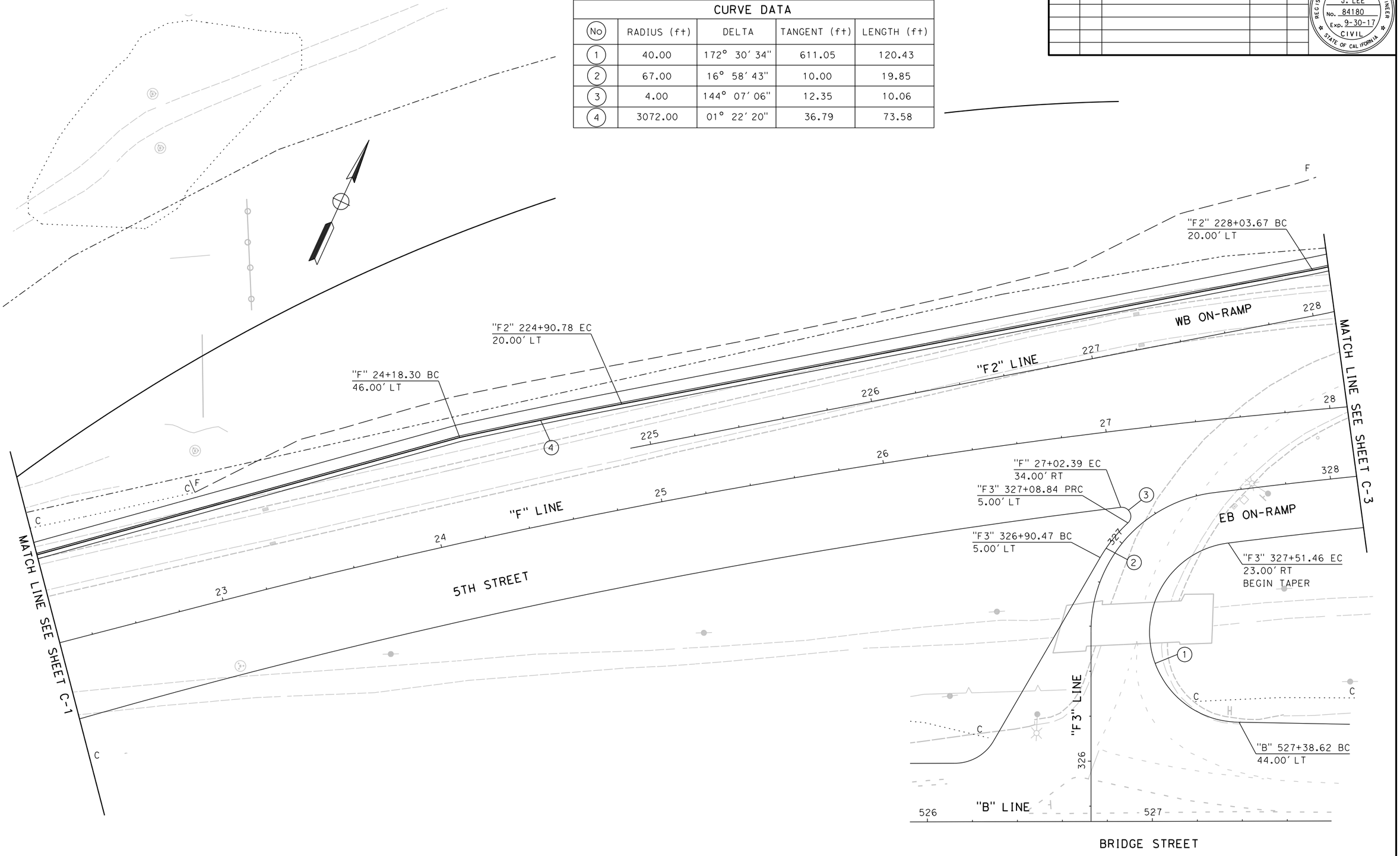

C-2

FOR REDUCED PLANS
ORIGINAL SCALE IS IN INCHES
0 1 2 3
ALL DIMENSIONS SHOWN IN FEET
UNLESS OTHERWISE NOTED

8/15/2016

...\511\1858g002.dgn

PLAN SCALE: 1"=20'
PROFILE SCALE:
HORIZ:
VERT:

CONTRACT NO: 17-XX
DESIGNED: A. LEE
DRAWN: A. LEE
CHECKED:
RECORD DRAWING: DATE:

DOKKEN ENGINEERING
110 BLUE RAVINE ROAD #200
FOLSOM, CA 95630
PHONE: (916) 858-0642
FAX: (916) 985-1845

CITY OF YUBA CITY

5TH STREET BRIDGE REPLACEMENT
CONSTRUCTION DETAILS

SHEET NO.
OF
215

REVISION #	DATE:	DESCRIPTION AND SHEET NO.:	APPROVED BY:	DATE:

REGISTERED PROFESSIONAL ENGINEER
AMANDA J. LEE
No. 84180
Exp. 9-30-17
CIVIL
STATE OF CALIFORNIA

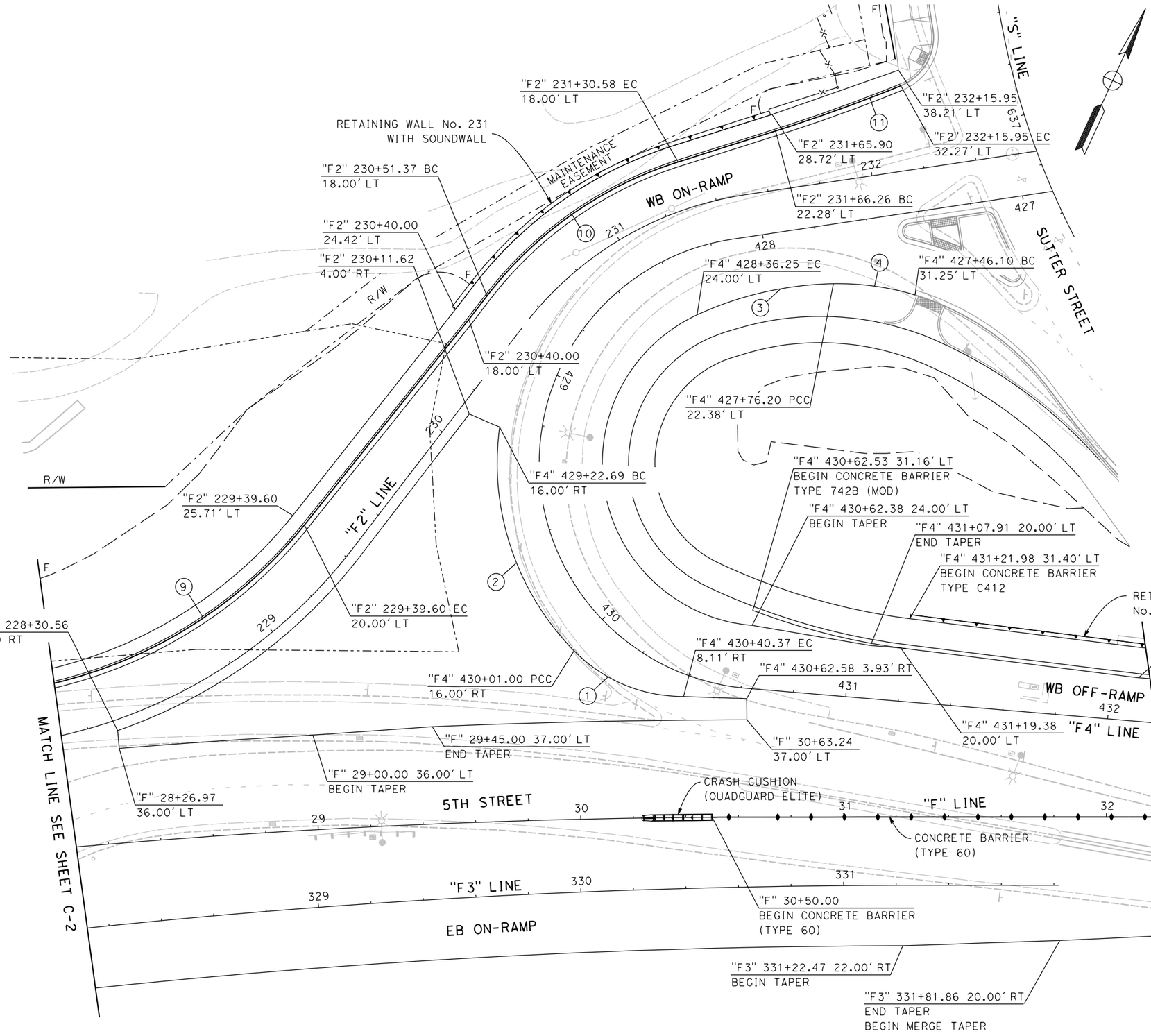

CURVE DATA

No	RADIUS (ft)	DELTA	TANGENT (ft)	LENGTH (ft)
1	58.00	45° 48' 55"	24.51	46.38
2	102.00	52° 10' 23"	49.94	92.88
3	130.00	23° 36' 21"	27.17	53.56
4	100.00	18° 03' 17"	15.89	31.51
5	250.00	18° 13' 46"	40.11	79.54
6	52.00	135° 52' 31"	128.30	123.32
7	140.00	41° 01' 34"	52.38	100.25
8	60.00	31° 39' 02"	17.01	33.14
9	173.00	40° 21' 12"	63.57	121.84
10	148.00	34° 54' 38"	46.54	90.18
11	633.09	04° 35' 18"	25.36	50.70

FOR REDUCED PLANS
ORIGINAL SCALE IS IN INCHES
0 1 2 3
ALL DIMENSIONS SHOWN IN FEET
UNLESS OTHERWISE NOTED

C-3

PLAN SCALE:
PROFILE SCALE:
HORIZ:
VERT:

CONTRACT NO: 17-XX
DESIGNED: A. LEE
DRAWN: A. LEE
CHECKED:
RECORD DRAWING:
DATE:

DOKKEN ENGINEERING
110 BLUE RAVINE ROAD #200
FOLSOM, CA 95630
PHONE: (916) 858-0642
FAX: (916) 985-1845

CITY OF YUBA CITY

5TH STREET BRIDGE REPLACEMENT
CONSTRUCTION DETAILS

SHEET NO.
OF
215

8/15/2016

...\511\1858g0003.dgn

REVISION #	DATE	DESCRIPTION AND SHEET NO.	APPROVED BY	DATE

REGISTERED PROFESSIONAL ENGINEER
AMANDA J. LEE
No. 84180
Exp. 9-30-17
CIVIL
STATE OF CALIFORNIA

NOTES:

1. FOR REMOVABLE BARRIER DETAILS, SEE SHEET C-14.
2. FOR LEVEE DISTRICT 1 ACCESS RAMP DETAILS, SEE SHEET C-X.

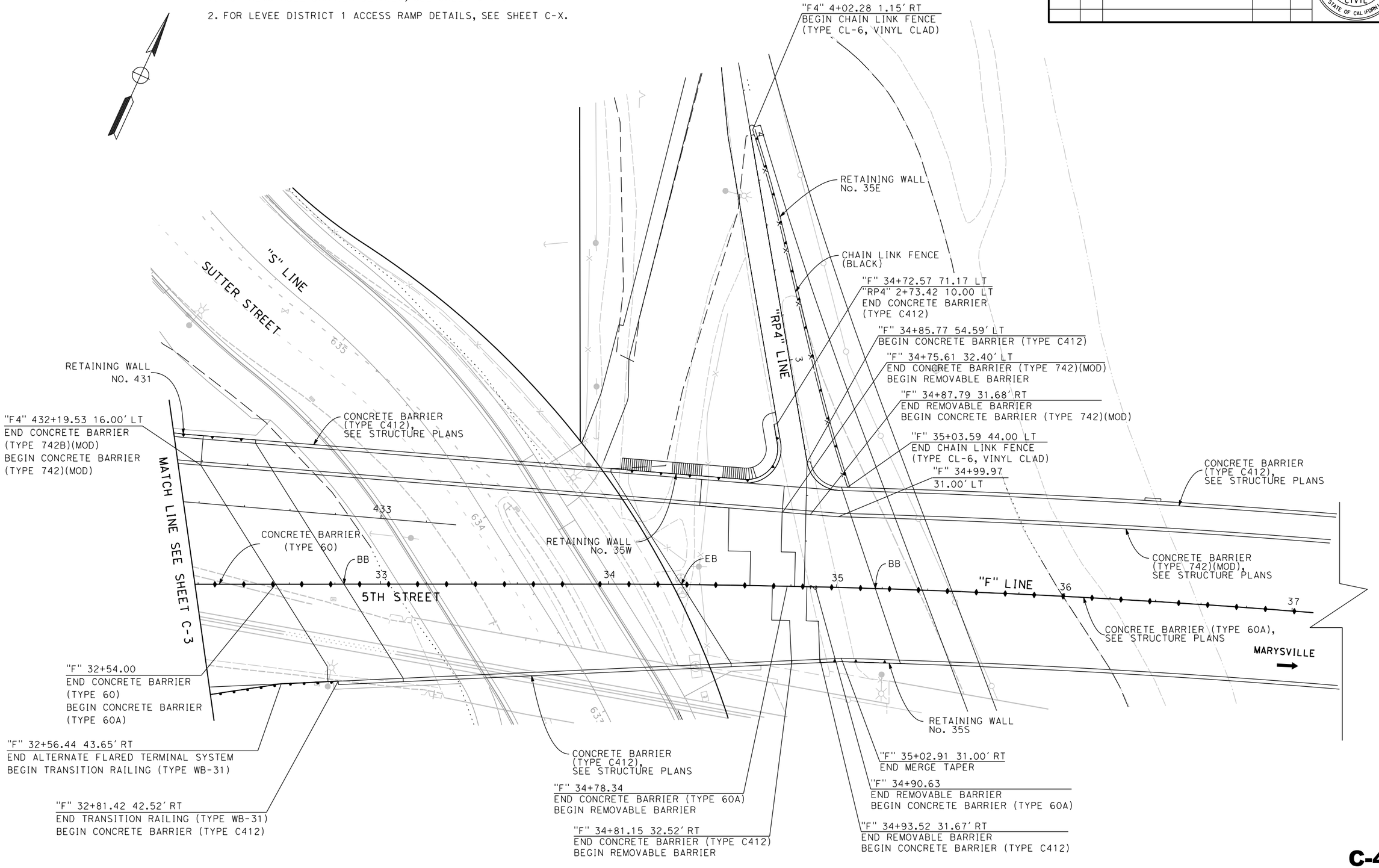

FOR REDUCED PLANS
ORIGINAL SCALE IS IN INCHES
0 1 2 3
ALL DIMENSIONS SHOWN IN FEET
UNLESS OTHERWISE NOTED

C-4

PLAN SCALE: 1"=20'
PROFILE SCALE:
HORIZ:
VERT:

CONTRACT NO: 17-XX
DESIGNED: A. LEE
DRAWN: A. LEE
CHECKED:
RECORD DRAWING: DATE:

DOKKEN ENGINEERING
110 BLUE RAVINE ROAD #200
FOLSOM, CA 95630
PHONE: (916) 858-0642
FAX: (916) 985-1845

CITY OF YUBA CITY

5TH STREET BRIDGE REPLACEMENT
CONSTRUCTION DETAILS

SHEET NO.
OF
215

8/15/2016

...\511\1858g0004.dgn

REVISION #	DATE:	DESCRIPTION AND SHEET NO.:	APPROVED BY:	DATE:

REGISTERED PROFESSIONAL ENGINEER
AMANDA J. LEE
No. 84180
Exp. 9-30-17
CIVIL
STATE OF CALIFORNIA

PLAN SCALE: 1"=20'
PROFILE SCALE:
HORIZ:
VERT:

CONTRACT NO: 17-XX
DESIGNED: A. LEE
DRAWN: A. LEE
CHECKED:
RECORD DRAWING: DATE:

DOKKEN ENGINEERING
110 BLUE RAVINE ROAD #200
FOLSOM, CA 95630
PHONE: (916) 858-0642
FAX: (916) 858-0643

CITY OF YUBA CITY

5TH STREET BRIDGE REPLACEMENT
CONSTRUCTION DETAILS

SHEET NO.
OF
215

CURVE DATA				
No	RADIUS (ft)	DELTA	TANGENT (ft)	LENGTH (ft)
1	1842.00	6° 17′ 01"	101.11	202.01
2	1361.06	6° 23′ 52"	76.07	151.98
3	1359.27	0° 37′ 20"	7.38	14.76
4	1030.00	0° 57′ 17"	8.58	17.16

NOTES:

1. FOR DETAILS NOT SHOWN AT 5th STREET UNDERPASS, SEE SHEET C-11.
2. FOR DETAILS NOT SHOWN AT CRASH CUSHION TRANSITION, SEE SHEET C-13.
3. FOR ROLL CURB TRANSITION AND ROLL CURB(MOD) TRANSITION, SEE SHEET C-13.

"F" 54+44.38 35.00′ LT
END CONCRETE BARRIER (TYPE 742B)(MOD)

"F" 54+41.38 37.00′ LT
END BARRIER CRASH CUSHION TRANSITION

"F" 54+35.38 36.50′ LT
BEGIN BARRIER CRASH CUSHION TRANSITION

"F" 54+15.00 35.00′ LT
END CONCRETE BARRIER
(TYPE 742)(MOD)
BEGIN CONCRETE BARRIER
(TYPE 742B)(MOD)

"F" 54+44.38 37.42′ LT
BEGIN ROLL CURB (MOD)

"F" 54+56.29 66.24′ LT
END CONCRETE BARRIER
(TYPE C412)

"F" 54+71.13
37.42′ LT

"F" 54+95.26 BC
34.98′ LT

"F" 55+50.00 0.17′ RT
END CONCRETE BARRIER (TYPE 60)
BEGIN CONCRETE BARRIER (TYPE 60C)

"F" 55+72.02 35.40′ LT
END ROLL CURB(MOD)
BEGIN ROLL CURB(MOD) TRANSITION

"F" 55+82.13 35.53 LT
END ROL CURB TRANSITION
BEGIN 6" BARRIER CURB

YUBA CITY

EB

54

CRASH CUSHION,
(QUADGUARD ELITE)

"F" 54+15.00
END CONCRETE BARRIER
(TYPE 60A)
BEGIN CONCRETE
BARRIER (TYPE 60)

"F" 54+29.18 31.00′ RT
BEGIN 6" BARRIER CURB (MOD)

"F" 54+50.00
31.00′ RT

"F" 54+35.08 31.00′ RT
END 6" BARRIER CURB (MOD)
BEGIN CURB BARRIER TRANSITION

"F" 54+45.08 31.00′ RT
END CURB BARRIER TRANSITION
BEGIN 6" BARRIER CURB

"F" 54+50.11 45.32′ RT
END CONCRETE BARRIER
(TYPE C412)

"F" 55+10.00 35.01′ RT
END 6" BARRIER CURB
BEGIN ROLL CURB TRANSITION

"F" 55+20.33 35.01′ RT
END ROLL CURB TRANSITION
BEGIN ROLL CURB

"F" 55+65.41
35.39′ RT

"F" 55+85.14 35.01′ RT
END ROLL CURB
BEGIN ROLL CURB TRANSITION

"F" 55+95.00 36.52′ RT
END ROLL CURB TRANSITION
BEGIN 6" BARRIER CURB

"F" 56+14.27 BC
37.43′ RT

"F" 57+16.45 35.01′ RT
END 6" BARRIER CURB
BEGIN ROLL CURB (MOD) TRANSITION

"F" 57+26.31 35.01′ RT
END ROLL CURB(MOD) TRANSITION
BEGIN ROLL CURB (MOD)

"F" 57+64.08 EC
38.06 RT

"F" 57+75.64
38.64′ RT

CRASH CUSHION, TYP
(QUADGUARD ELITE), TYP

"F" 57+00.00 EC
38.19′ LT

"F" 57+28.06
51.23′ LT

"F" 57+50.00
39.40′ LT

CHAIN LINK
FENCE (GREEN)

"F" 57+93.61 3.16′ LT
BEGIN 8" BARRIER CURB

"F" 57+93.64 2.16′ LT
END CONCRETE BARRIER
(TYPE 60C)

"F" 57+44.94 89.95′ LT
BEGIN CHAIN LINK FENCE
(TYPE CL-6, VINYL CLAD)

"F" 57+95.24 53.16′ LT
END CHAIN LINK FENCE
(TYPE CL-6, VINYL CLAD)

"F" 58+00.00 38.97′ LT
END 6" BARRIER CURB
BEGIN 8" BARRIER CURB

"F" 58+35.14 55.56′ LT
BEGIN CHAIN LINK FENCE
(TYPE CL-6, VINYL CLAD)

"F" 58+45.31 40.98′ LT
END 8" BARRIER CURB
BEGIN 6" BARRIER CURB

"F" 58+75.38 60.09′ LT
END CHAIN LINK FENCE
(TYPE CL-6, VINYL CLAD)

"F" 58+73.22 BC
42.33′ LT

"F" 58+90.65 EC
42.01′ LT

5th STREET
UNDERPASS

CHAIN LINK
FENCE (GREEN)

FOR BARRIER DETAILS,
SEE SHEET C-11

"F" 58+58.77 4.99′ LT
END 8" BARRIER CURB

"F" 58+51.29 35.06′ RT
BEGIN 6" BARRIER CURB

"F" 58+16.48 EC
34.48′ RT

"F" 58+01.92 BC
35.08′ RT

"F" 58+02.01 37.50′ RT
END ROLL CURB (MOD)

"F" 58+56.56
34.91′ RT

MATCH LINE SEE SHEET C-6

"F" LINE
5TH STREET

DETAIL A
CRASH CUSHION TRANSITION
NOT TO SCALE

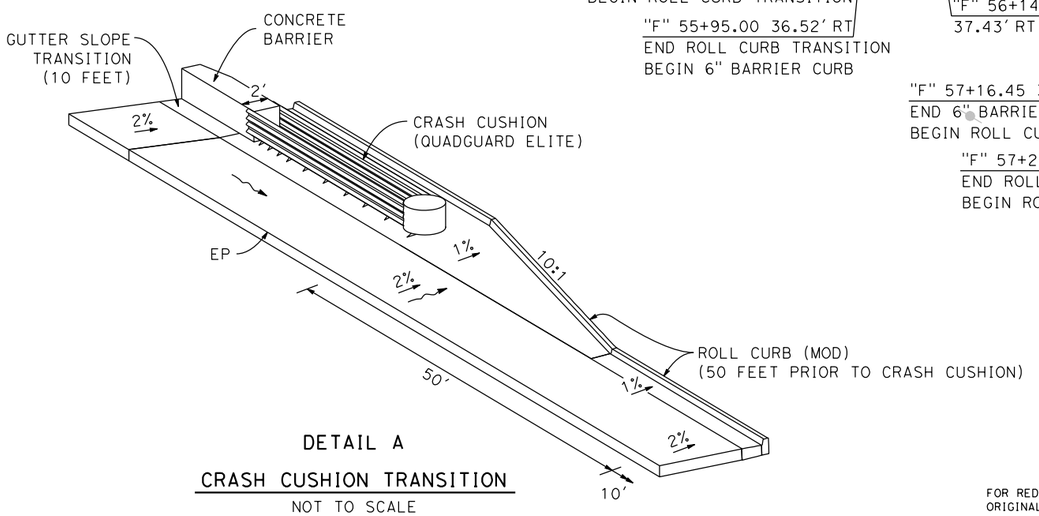

FOR REDUCED PLANS
ORIGINAL SCALE IS IN INCHES
0 1 2 3
ALL DIMENSIONS SHOWN IN FEET
UNLESS OTHERWISE NOTED

C-5

8/15/2016

...\511\858g005.dgn

REVISION #	DATE:	DESCRIPTION AND SHEET NO.:	APPROVED BY:	DATE:

REGISTERED PROFESSIONAL ENGINEER
AMANDA J. LEE
No. 84180
Exp. 9-30-17
CIVIL
STATE OF CALIFORNIA

PLAN SCALE: 1"=20'
PROFILE SCALE:
HORIZ:
VERT:

CONTRACT NO: 17-XX
DESIGNED: A. LEE
DRAWN: A. LEE
CHECKED:
RECORD DRAWING: DATE:

DOKKEN ENGINEERING
110 BLUE RAVINE ROAD #200
FOLSOM, CA 95630
PHONE: (916) 858-0642
FAX: (916) 858-0643

CITY OF YUBA CITY

5TH STREET BRIDGE REPLACEMENT
CONSTRUCTION DETAILS

SHEET NO.
OF
215

"F" 59+86.90 98.77' RT
END 6" BARRIER CURB

"F" 60+16.54 99.29' RT
BEGIN 6" BARRIER CURB

"F" 60+01.67 58.76' RT
END 6" CONCRETE CURB
BEGIN 6" BARRIER CURB

"J" 763+14.81 41.21' LT
END MINOR CONCRETE
(TEXTURED PAVING)

"J" 762+94.81 41.21' LT
BEGIN MINOR CONCRETE
(TEXTURED PAVING)

"F" 60+17.35 53.53' RT
END 6" BARRIER CURB

"F" 60+13.56 37.67' RT BC
END GUTTER
BEGIN 6" CONCRETE CURB
BEGIN 6" BARRIER CURB

"F" 61+85.98 61.90' LT
END RETAINING CURB

MATCH LINE SEE SHEET C-5

"F" 59+87.70 53.73' RT
BEGIN 6" CONCRETE CURB

"F" 59+96.80 41.72' RT
END 6" CONCRETE CURB

"F" 61+74.38 53.09' LT
BEGIN RETAINING CURB

"F" 60+50.00 EC
37.00' LT

"F" 59+97.73 38.23' RT
END 6" BARRIER CURB
BEGIN 6" CONCRETE CURB
BEGIN GUTTER

"F" LINE

"F" 60+52.63 37.71' LT
END 6" CONCRETE CURB
BEGIN MINOR CONCRETE
(TEXTURED PAVING)

"F" 61+66.50 BC
37.00' LT

"J" 762+94.81 EC
40.50' LT

"F" 61+88.50 BC
45.65' LT

"F" 61+83.28 EC
42.13' LT

"J" 762+83.65 BC
39.50' RT
FL 57.79

MATCH LINE SEE SHEET C-7

"J" 763+09.44 40.21' RT
END MINOR CONCRETE
(TEXTURED PAVING)

"J" 762+86.44 40.21' RT
BEGIN MINOR CONCRETE (TEXTURED PAVING)

"F" 62+76.40 Δ/4
42.16' LT
FL 57.86

"J" 762+89.44 50.30' RT
BEGIN RETAINING CURB

"F" 62+79.66 Δ/2
37.34' LT
FL 58.07

"F" 62+84.51 Δ/4
34.13' LT
FL 58.28

"F" 62+96.81 40.00' LT EC
END RETAINING CURB

"F" 62+96.83 33.71' LT
BEGIN MINOR CONCRETE (TEXTURED PAVING)

"F" 63+16.83 33.71' LT
END MINOR CONCRETE
TEXTURED PAVING)

RETAINING WALL
No. 59

"F" 59+34.17 BC
38.88' RT

"F" 59+57.62 EC
44.34' RT

"F" 59+71.93 BC
50.42' RT

"F" 59+99.31 EC
56.00' RT

"F" 60+64.53 BC
56.00' RT

"F" 61+81.82 42.03' LT
END MINOR CONCRETE (TEXTURED PAVING)

"F" 61+47.40 37.72' RT
BEGIN 6" BARRIER CURB
R=2'

"F" 61+49.33 EC
36.00' RT

"F" 61+54.81 Δ/4
68.06' RT
FL 57.67

"F" 61+78.01 BC
36.00' RT

"F" 62+90.22 EC
33.00' LT
FL 58.34

"F" 62+84.35 Δ/4
37.15 RT
FL 57.98

"F" 62+94.12 36.71' RT
END SIDEWALK
BEGIN MINOR CONCRETE
(TEXTURED PAVING)

UNDERGROUND
STORAGE TANK
TO BE REMOVED
(BY OTHERS)

"J" 761+95.38 Δ/2
42.94 RT
FL 58.00

"F" 61+31.90 PCC
60.75' RT
FL 57.50

"F" 61+48.81 PRC
39.92' RT

"F" 61+52.94
74.42' RT

"J" 761+90.50 Δ/4
39.65 RT
FL 58.03

"F" 63+14.12 36.71' RT
END MINOR CONCRETE
(TEXTURED PAVING)

"F" 64+49.06 40.00' LT
END 6" BARRIER CURB
END SIDEWALK

"F" 64+35.88 36.00' RT
END 6" BARRIER CURB

"F" 61+55.26 69.09' RT
BEGIN RETAINING CURB

"F" 61+64.60 82.46' RT
END RETAINING CURB

"J" 761+73.70 EC
28.73' LT

R=2'

"J" 761+54.23 EC
28.70' LT

"J" 761+52.30 30.17' LT
6" BARRIER CURB

"J" 761+53.23 PRC
32.43' LT

"F" 61+68.38 78.07' RT
BEGIN MINOR CONCRETE
(TEXTURED PAVING)
BEGIN SIDEWALK

"J" 761+54.21 Δ/2
62.84' LT
FL 58.15

"F" 761+43.38 55.35' LT
END MINOR CONCRETE
(TEXTURED PAVING)

"J" 761+34.13 Δ/4
49.61' LT
FL 58.58

"J" 760+95.62
50.00' LT

"J" 761+10.82 EC
43.73' LT
FL 58.80

"J" 761+05.11
50.00' LT

"F" 62+90.12 EC
36.00 RT
FL 57.97

"J" 761+84.73 38.50RT BC
FL 58.06

"J" 761+76.66 39.21' RT
END MINOR CONCRETE
(TEXTURED PAVING)

"J" 761+56.66 39.21' RT
BEGIN MINOR CONCRETE
(TEXTURED PAVING)

"F" 64+45.02
CONFORM

"J" 761+03.10 38.50' RT
BEGIN 6" BARRIER CURB
BEGIN SIDEWALK

MATCH LINE SEE SHEET C-7

CURVE DATA				
No	RADIUS (ft)	DELTA	TANGENT (ft)	LENGTH (ft)
1	70.00	19° 48' 31"	12.22	24.20
2	70.00	23° 01' 32"	14.26	28.13
3	480.00	8° 04' 08"	33.85	67.60
4	72.00	81° 26' 52"	61.98	102.35
5	96.00	43° 05' 38"	37.91	72.20
6	994.00	2° 06' 03"	18.22	36.44
7	30.00	89° 24' 20"	29.69	46.81
8	15.00	90° 29' 01"	15.13	23.69
9	15.00	89° 26' 34"	14.85	23.42
10	15.00	90° 33' 26"	15.15	23.71
11	31.79	34° 00' 08"	9.72	18.87

NOTES:

1. FOR MINOR CONCRETE (TEXTURED PAVING) DETAILS, SEE SHEET C-12.

C-6

FOR REDUCED PLANS
ORIGINAL SCALE IS IN INCHES

0 1 2 3

ALL DIMENSIONS SHOWN IN FEET
UNLESS OTHERWISE NOTED

8/15/2016

...\511\1858a0006.dgn

REVISION #	DATE:	DESCRIPTION AND SHEET NO.:	APPROVED BY:	DATE:

REGISTERED PROFESSIONAL ENGINEER
AMANDA J. LEE
No. 84180
Exp. 9-30-17
CIVIL
STATE OF CALIFORNIA

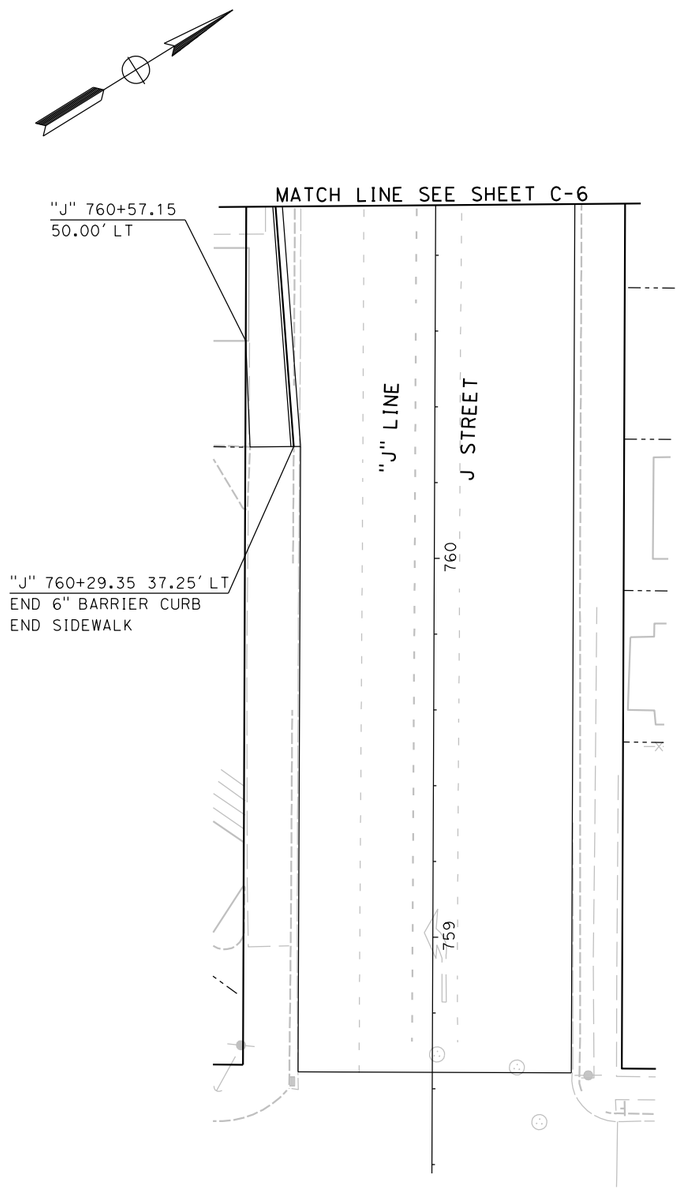

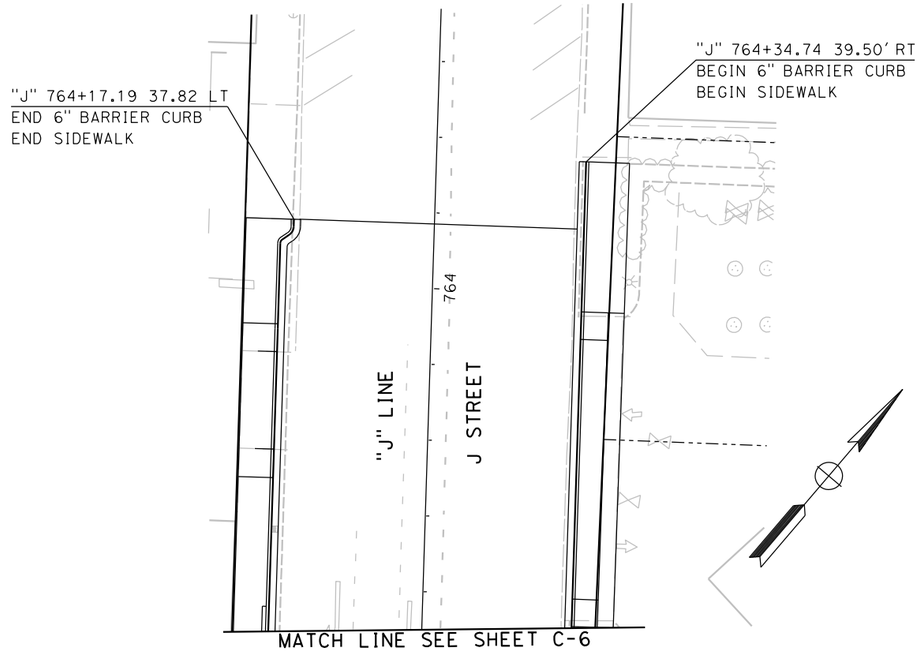

CURVE DATA				
(No)	RADIUS (ft)	DELTA	TANGENT (ft)	LENGTH (ft)
(1)	5.00	91° 24' 37"	5.12	7.98
(2)	5.00	75° 41' 48"	3.89	6.61
(3)	5.00	75° 41' 48"	3.89	6.61

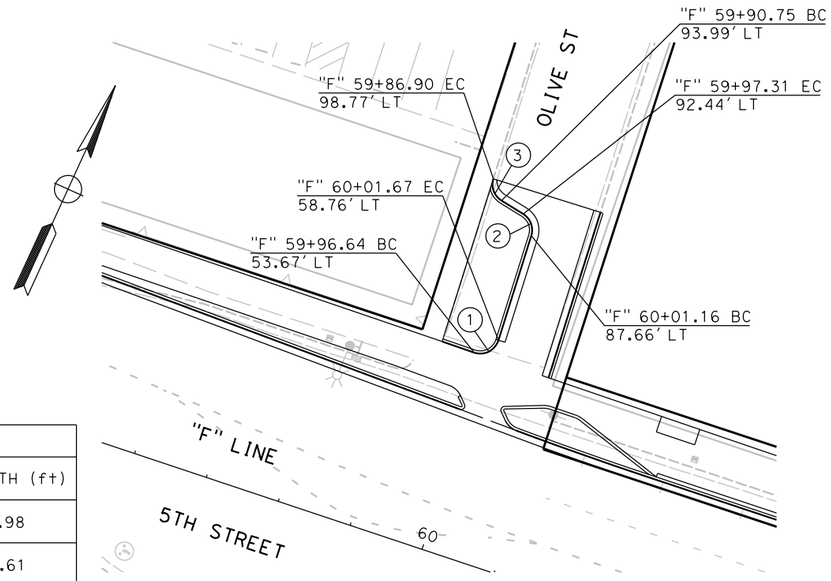

OLIVE ST DETAIL

FOR REDUCED PLANS
ORIGINAL SCALE IS IN INCHES
0 1 2 3

ALL DIMENSIONS SHOWN IN FEET
UNLESS OTHERWISE NOTED

C-7

PLAN SCALE:
PROFILE SCALE:
HORIZ:
VERT:

CONTRACT NO: 17-XX
DESIGNED: A. LEE
DRAWN: A. LEE
CHECKED:
RECORD DRAWING:
DATE:

DOKKEN ENGINEERING
110 BLUE RAVINE ROAD #200
FOLSOM, CA 95630
PHONE: (916) 858-0642
FAX: (916) 858-0643

CITY OF YUBA CITY

5TH STREET BRIDGE REPLACEMENT
CONSTRUCTION DETAILS

SHEET NO.
OF
215

8/15/2016

...\511\1858ga0007.dgn

REVISION #	DATE:	DESCRIPTION AND SHEET NO.:	APPROVED BY:	DATE:

REGISTERED PROFESSIONAL ENGINEER
AMANDA J. LEE
No. 84180
Exp. 9-30-17
CIVIL
STATE OF CALIFORNIA

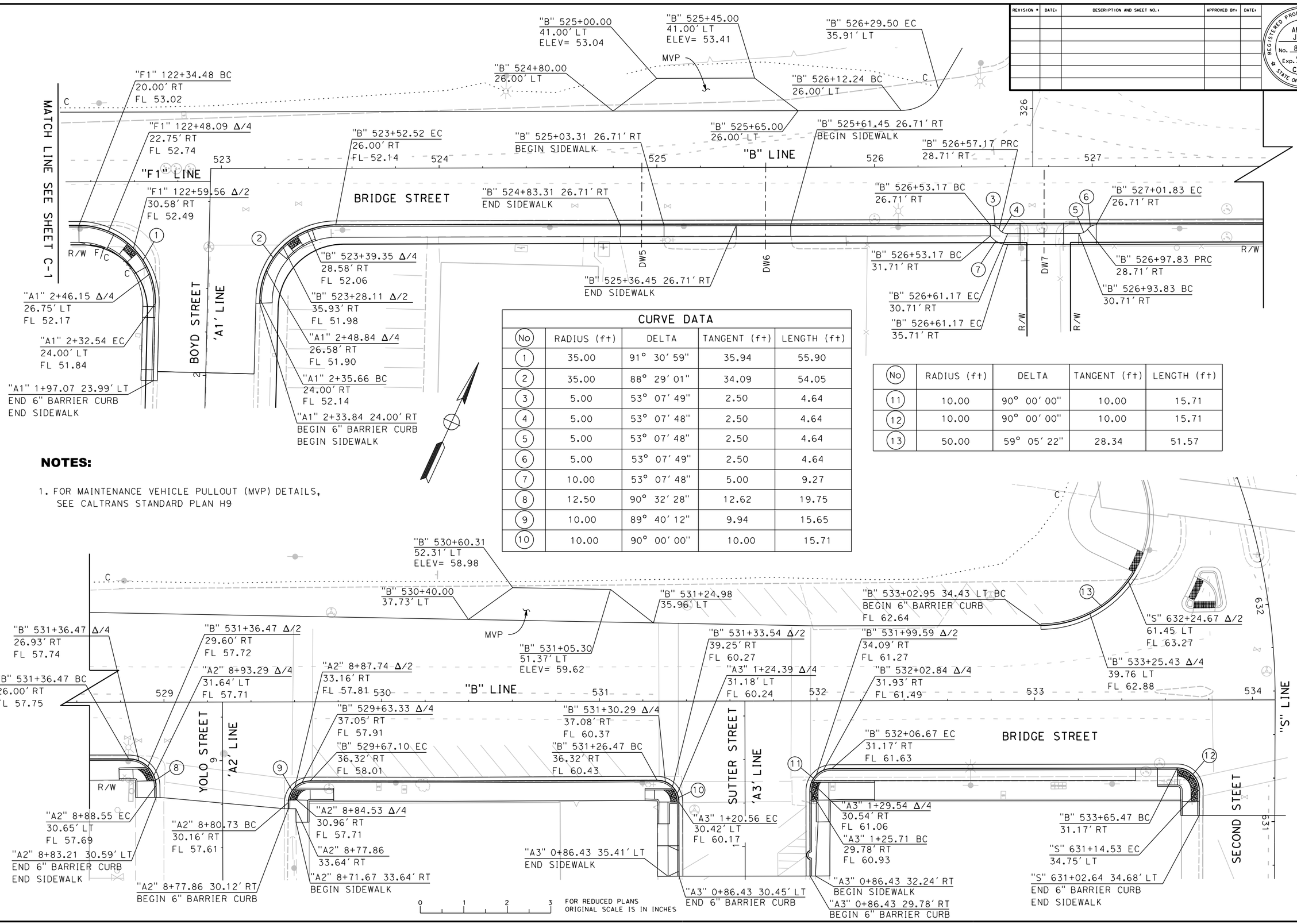

CURVE DATA				
No	RADIUS (ft)	DELTA	TANGENT (ft)	LENGTH (ft)
1	35.00	91° 30' 59"	35.94	55.90
2	35.00	88° 29' 01"	34.09	54.05
3	5.00	53° 07' 49"	2.50	4.64
4	5.00	53° 07' 48"	2.50	4.64
5	5.00	53° 07' 48"	2.50	4.64
6	5.00	53° 07' 49"	2.50	4.64
7	10.00	53° 07' 48"	5.00	9.27
8	12.50	90° 32' 28"	12.62	19.75
9	10.00	89° 40' 12"	9.94	15.65
10	10.00	90° 00' 00"	10.00	15.71

No	RADIUS (ft)	DELTA	TANGENT (ft)	LENGTH (ft)
11	10.00	90° 00' 00"	10.00	15.71
12	10.00	90° 00' 00"	10.00	15.71
13	50.00	59° 05' 22"	28.34	51.57

NOTES:

1. FOR MAINTENANCE VEHICLE PULLOUT (MVP) DETAILS, SEE CALTRANS STANDARD PLAN H9

0 1 2 3 FOR REDUCED PLANS ORIGINAL SCALE IS IN INCHES

8/15/2016

...\511\1858g0008.dgn

PLAN SCALE: 1"=20'
PROFILE SCALE:
HORIZ:
VERT:

CONTRACT NO: 17-XX
DESIGNED: A. LEE
DRAWN: A. LEE
CHECKED:
RECORD DRAWING: DATE:

DOKKEN ENGINEERING
110 BLUE RAVINE ROAD 7200
FOLSOM, CA 95630
PHONE: (916) 858-0642
FAX: (916) 985-1845

CITY OF YUBA CITY

5TH STREET BRIDGE REPLACEMENT
CONSTRUCTION DETAILS

SHEET NO.
C-8
OF
215

REVISION #	DATE:	DESCRIPTION AND SHEET NO.:	APPROVED BY:	DATE:

REGISTERED PROFESSIONAL ENGINEER
AMANDA J. LEE
No. 84180
Exp. 9-30-17
CIVIL
STATE OF CALIFORNIA

PLAN SCALE: 1"=30'
PROFILE SCALE:
HORIZ:
VERT:

CONTRACT NO: 17-XX
DESIGNED: A. LEE
DRAWN: A. LEE
CHECKED:
RECORD DRAWING: DATE:

DOKKEN ENGINEERING
110 BLUE RAVINE ROAD #200
FOLSOM, CA 95630
PHONE: (916) 858-0642
FAX: (916) 858-0643

CITY OF YUBA CITY

5TH STREET BRIDGE REPLACEMENT
CONSTRUCTION DETAILS

SHEET NO.
OF
215

CURVE DATA				
No	RADIUS (ft)	DELTA	TANGENT (ft)	LENGTH (ft)
1	326.00	10° 39′ 21"	30.40	60.63
2	20.00	83° 49′ 41"	17.95	29.26
3	150.00	21° 41′ 59"	28.75	56.81
4	100.00	36° 15′ 32"	32.74	63.28
5	277.00	30° 35′ 16"	75.75	147.88
6	338.00	14° 21′ 20"	42.57	84.69
7	292.00	18° 59′ 56"	48.86	96.83
8	355.00	19° 31′ 08"	61.06	120.94
9	270.42	4° 42′ 43"	11.13	22.24
10	308.83	24° 10′ 16"	66.13	130.28
11	210.00	16° 58′ 50"	31.35	62.24
12	50.00	47° 47′ 05"	22.15	41.70

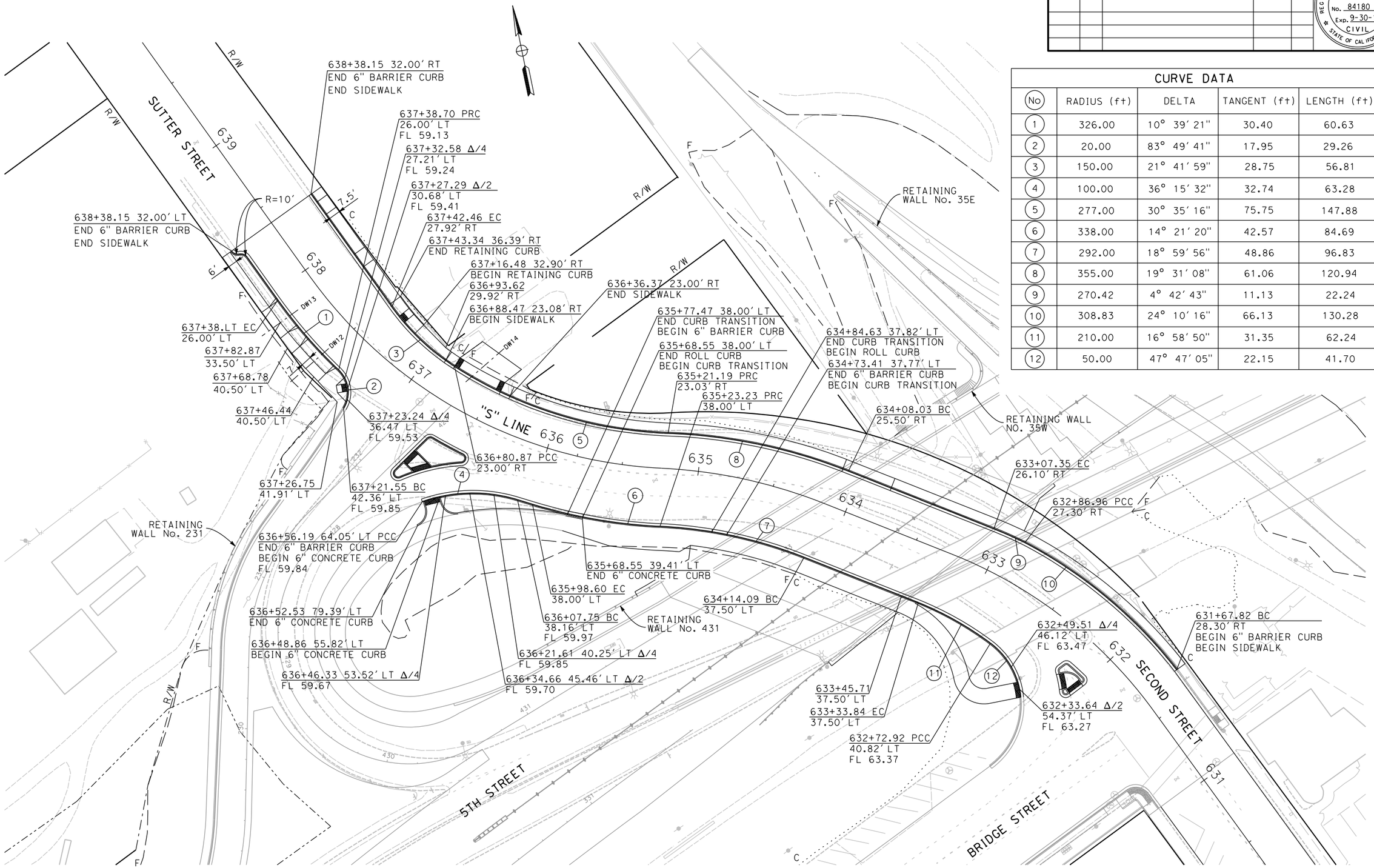

C-9

FOR REDUCED PLANS ORIGINAL SCALE IS IN INCHES
0 1 2 3
ALL DIMENSIONS SHOWN IN FEET UNLESS OTHERWISE NOTED

8/15/2016

...\511\1858g0009.dgn

NOTES:

1. FOR STORM DRAIN AND SEWER MANHOLE DETAILS, SEE UTILITY DETAIL SHEETS.
2. FOR GILSIZER SLOUGH BASIN CAPACITY GRADING, SEE SHEET GD-X

REVISION #	DATE:	DESCRIPTION AND SHEET NO.:	APPROVED BY:	DATE:

REGISTERED PROFESSIONAL ENGINEER
MEGAN R. CARTER
No. 75885
Exp. 6/30/18
CIVIL
STATE OF CALIFORNIA

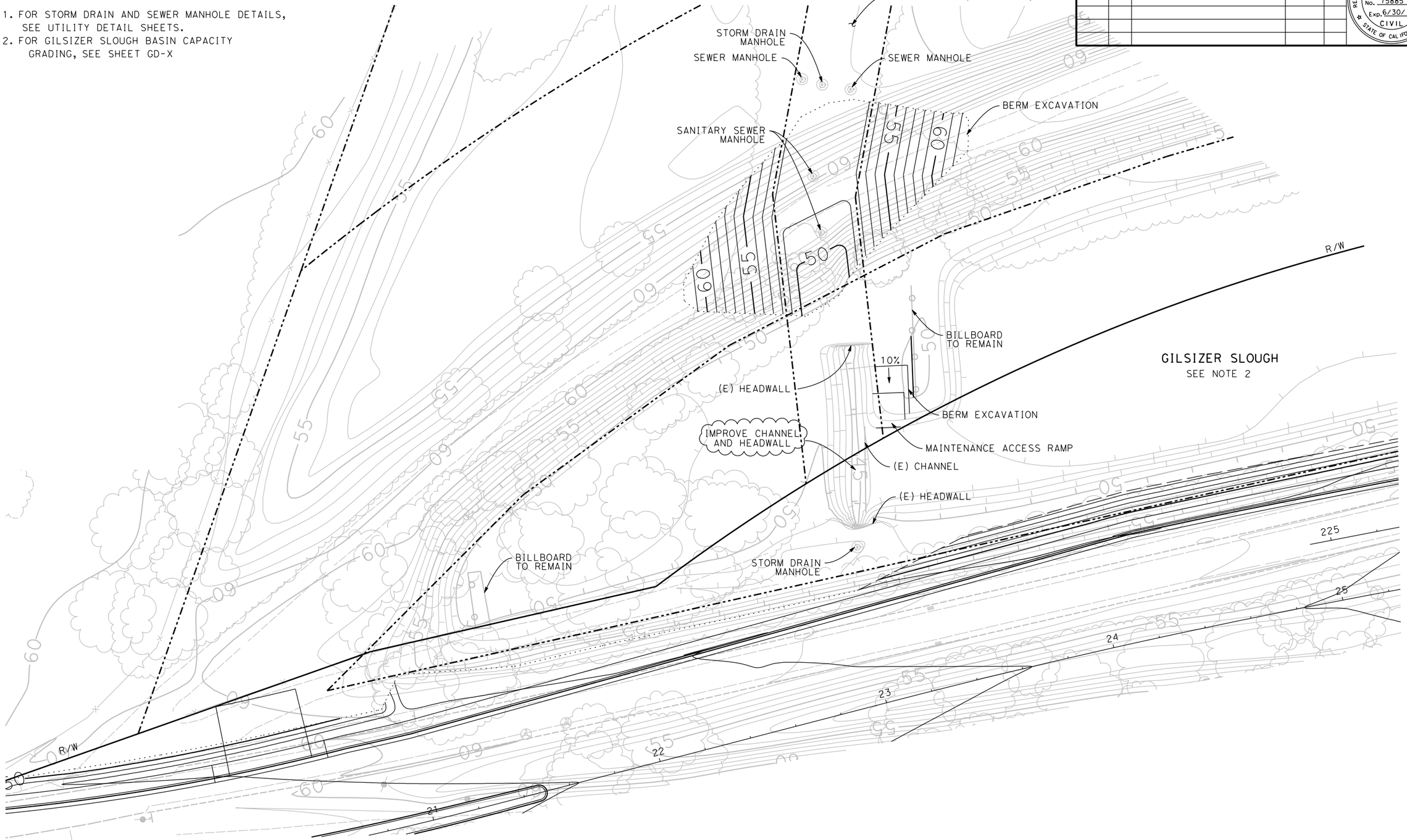

GILSIZER SLOUGH MODIFICATION PLAN

SCALE: 1"=20'

FOR REDUCED PLANS ORIGINAL SCALE IS IN INCHES 0 1 2 3

ALL DIMENSIONS SHOWN IN FEET UNLESS OTHERWISE NOTED

C-10

PLAN SCALE:
PROFILE SCALE:
HORIZ:
VERT:

CONTRACT NO: 17-XX
DESIGNED: M. CARTER
DRAWN: A. LEE
CHECKED:
RECORD DRAWING:
DATE:

DOKKEN ENGINEERING
110 BLUE RAVINE ROAD #200
FOLSOM, CA 95630
PHONE: (916) 858-0642
FAX: (916) 858-0643

CITY OF YUBA CITY

5TH STREET BRIDGE REPLACEMENT
CONSTRUCTION DETAILS

SHEET NO.
OF
215

8/15/2016

...\511\1858ga010.dgn

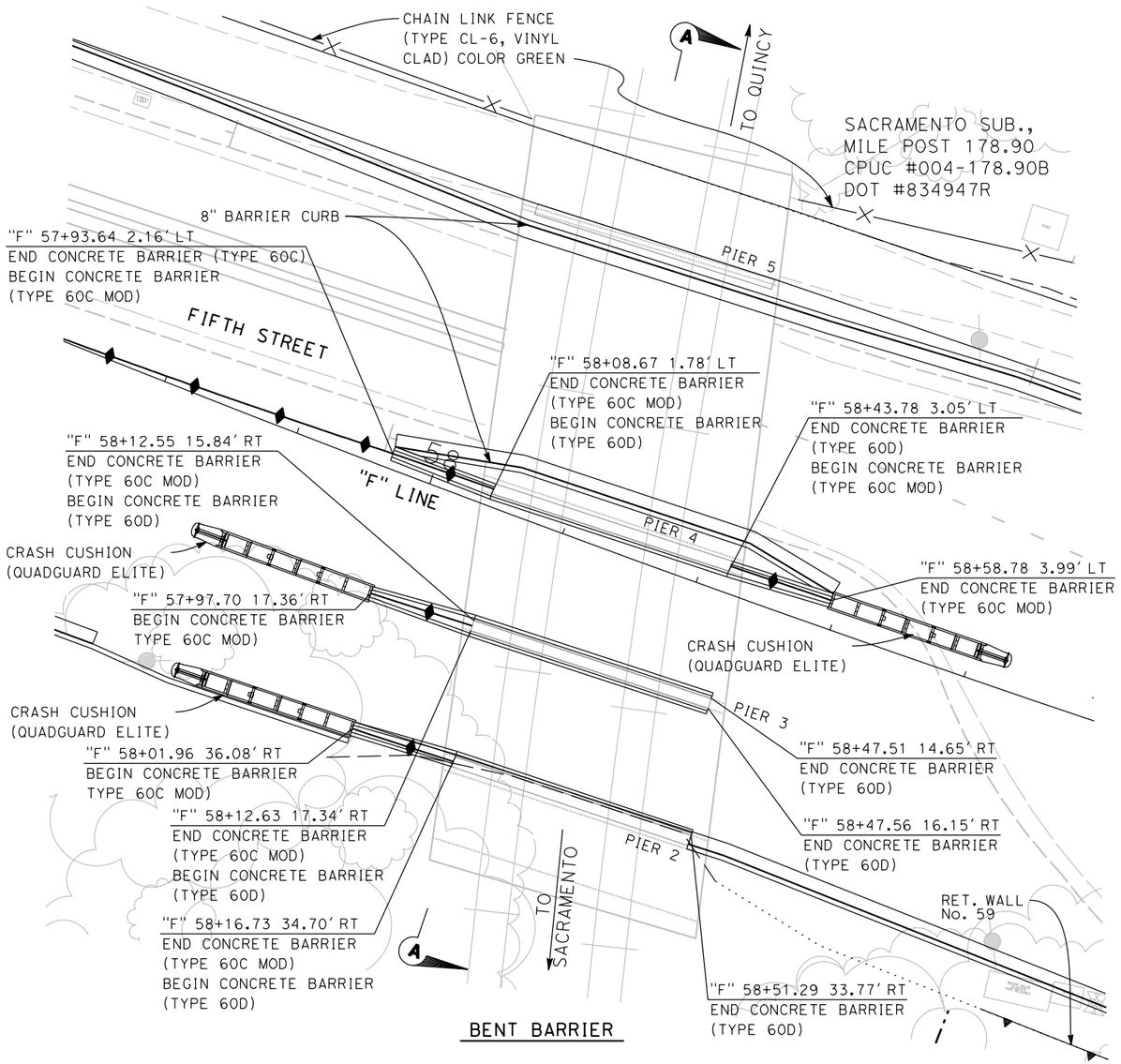

BENT BARRIER

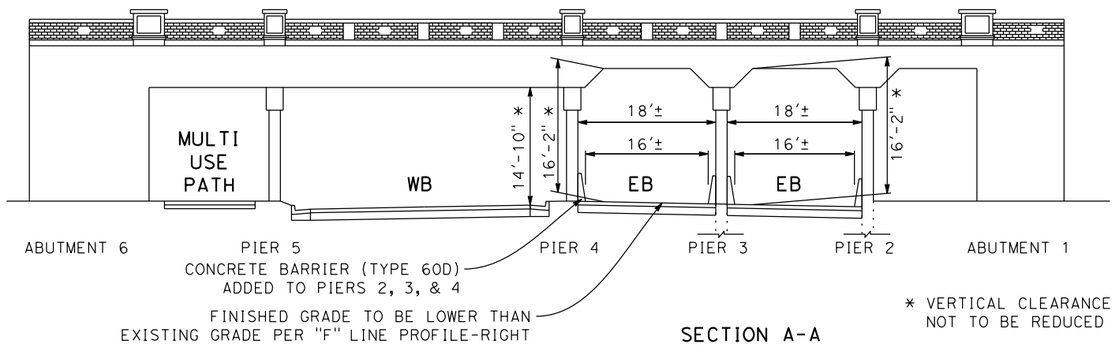

SECTION A-A
SCALE: 1"=10'

* VERTICAL CLEARANCE
NOT TO BE REDUCED

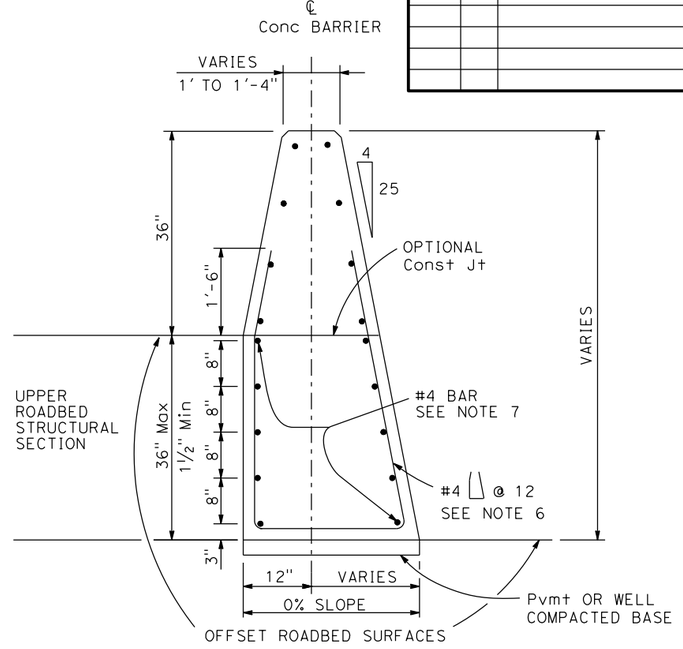

CONCRETE BARRIER TYPE 60C(MOD)

DETAILS SIMILAR TO TYPE 60 EXCEPT AS NOTED.
USE CONCRETE BARRIER END ANCHOR WHEN NECESSARY.
36" ROADBED SURFACES OFFSET SHOWN.

CONCRETE BARRIER TYPE 60D

FOR REDUCED PLANS
ORIGINAL SCALE IS IN INCHES

0 1 2 3

ALL DIMENSIONS SHOWN IN FEET
UNLESS OTHERWISE NOTED

REVISION #	DATE:	DESCRIPTION AND SHEET NO.:	APPROVED BY:	DATE:

REGISTERED PROFESSIONAL ENGINEER
MEGAN R. CARTER
No. 75885
Exp. 6/30/18
CIVIL
STATE OF CALIFORNIA

PLAN SCALE: 1"=10'
PROFILE SCALE:
HORIZ:
VERT:

CONTRACT NO: 17-XX
DESIGNED: M. CARTER
DRAWN: A. LEE
CHECKED:
RECORD DRAWING: DATE:

DOKKEN ENGINEERING
110 BLUE RAVINE ROAD #200
FOLSOM, CA 95630
PHONE: (916) 858-0642
FAX: (916) 985-1845

CITY OF YUBA CITY

5TH STREET BRIDGE REPLACEMENT
CONSTRUCTION DETAILS

SHEET NO.
C-11
OF
215

8/15/2016
...\511\1858g0011.dgn

REVISION #	DATE:	DESCRIPTION AND SHEET NO.:	APPROVED BY:	DATE:

REGISTERED PROFESSIONAL ENGINEER
MEGAN R. CARTER
No. 75885
Exp. 6/30/18
CIVIL
STATE OF CALIFORNIA

PLAN SCALE: 1"=10'
PROFILE SCALE:
HORIZ:
VERT:

CONTRACT NO: 17-XX
DESIGNED: M. CARTER
DRAWN: A. LEE
CHECKED:
RECORD DRAWING:
DATE:

DOKKEN ENGINEERING
110 BLUE RAVINE ROAD #200
FOLSOM, CA 95630
PHONE: (916) 858-0642
FAX: (916) 858-0643

CITY OF YUBA CITY

5TH STREET BRIDGE REPLACEMENT
CONSTRUCTION DETAILS

SHEET NO.
OF
215

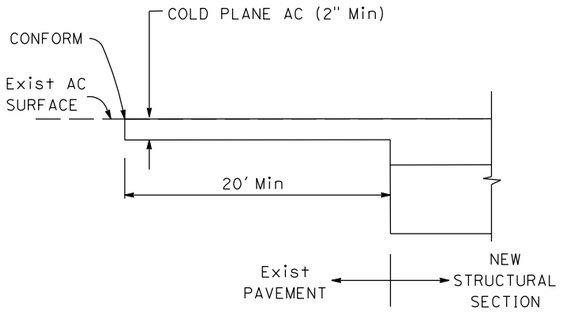

HMA CONFORM DETAIL
NOT TO SCALE

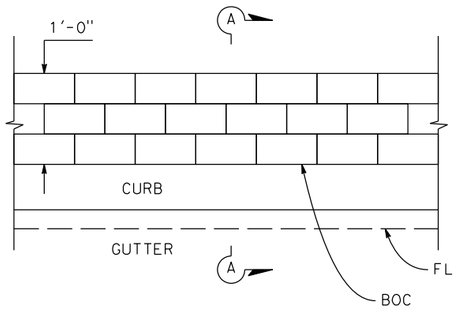

PLAN

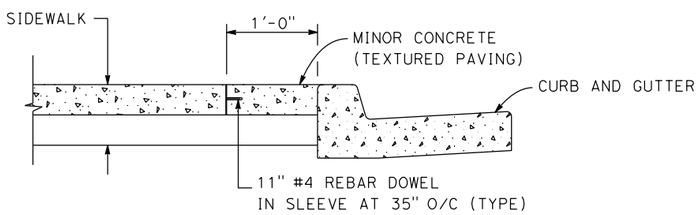

SECTION A-A

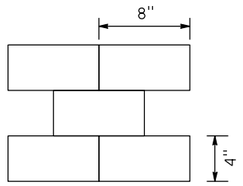

TEXTURED PAVING TO BE STAINED RED

MINOR CONCRETE (TEXTURED PAVING)
NOT TO SCALE

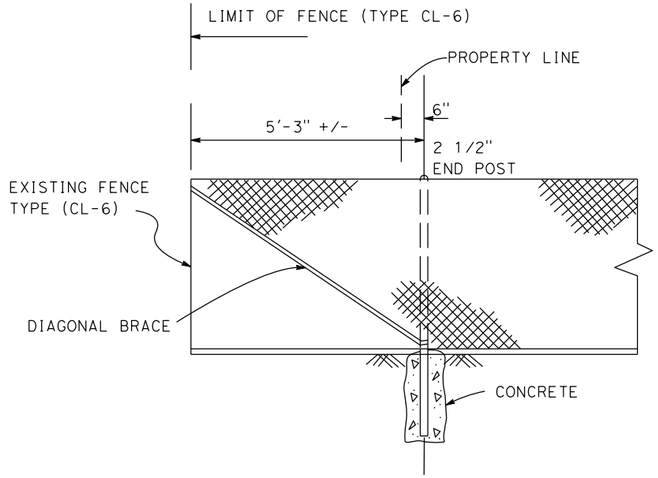

FENCE DETAIL E
NOT TO SCALE

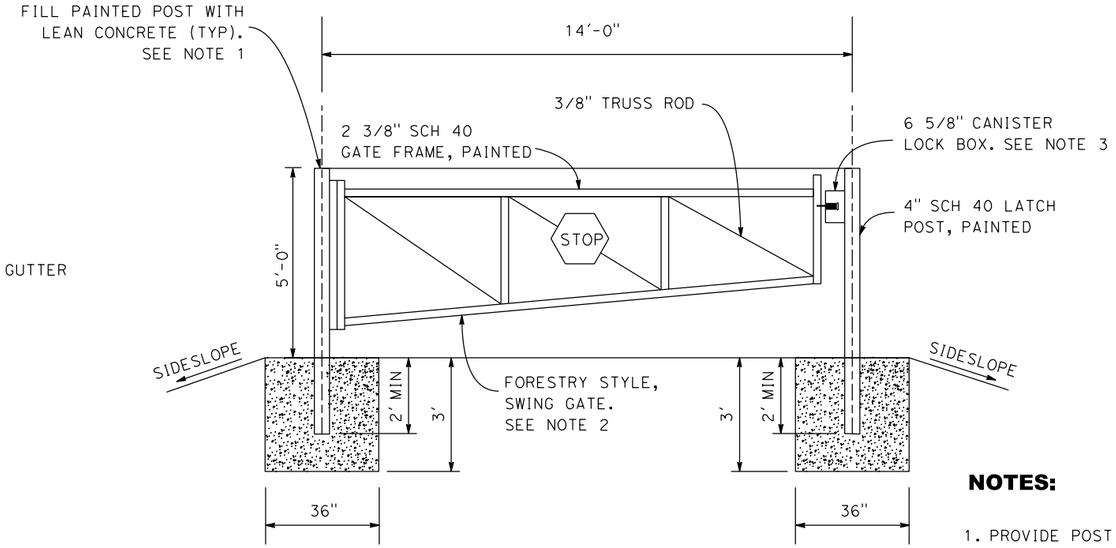

LOCATION	PAINT COLOR	SWING
TEAGARDEN LEVEE ACCESS	GREY	TWO-WAY
MARYSVILLE LEVEE ACCESS	YELLOW	TWO-WAY

PIPE GATE DETAIL
NOT TO SCALE

FOR REDUCED PLANS ORIGINAL SCALE IS IN INCHES
0 1 2 3
ALL DIMENSIONS SHOWN IN FEET UNLESS OTHERWISE NOTED

NOTES:

1. PROVIDE POST SUPPORT (HOLD BACK POSTS) IN ACCORDANCE WITH MANUFACTURERS RECOMMENDATIONS.

2. CONTRACTOR SHALL CONFIRM LAYOUT AND SIDESLOPES PRIOR TO FABRICATION OF PIPE GATE. SUBMIT FABRICATION DRAWINGS FOR COMPLETE FARE ASSEMBLE FOR APPROVAL. GATE CONSTRUCTION AND INSTALLATION SHALL BE IN ACCORDANCE WITH MANUFACTURER'S RECOMMENDATIONS. SWING DIRECTION SHOWN IN TABLE.

3. CANISTER LOCK BOX SHALL BE CAPABLE OF ACCOMMODATING MULTIPLE LOCKS. LOCK BOX SHALL BE DESIGNED BY CONTRACTOR AND SUBMITTED FOR APPROVAL.

C-12

8/15/2016
...\511\1858g0012.dgn

REVISION #	DATE:	DESCRIPTION AND SHEET NO.:	APPROVED BY:	DATE:

REGISTERED PROFESSIONAL ENGINEER
AMANDA J. LEE
No. 84180
Exp. 9-30-17
CIVIL
STATE OF CALIFORNIA

PLAN SCALE: 1"=20'
PROFILE SCALE:
HORIZ:
VERT:

CONTRACT NO: 17-XX
DESIGNED: A. LEE
DRAWN: A. LEE
CHECKED:
RECORD DRAWING: DATE:

DOKKEN ENGINEERING
110 BLUE RAVINE ROAD #200
FOLSOM, CA 95630
PHONE: (916) 858-0642
FAX: (916) 858-0643

CITY OF YUBA CITY

5TH STREET BRIDGE REPLACEMENT
CONSTRUCTION DETAILS

SHEET NO.
OF
215

NOTES:

1. PROFILE GRADE VARIES. FOR PROFILE INFORMATION, SEE SHEETS XX
2. FOR ROLL CURB SEE CITY OF MARYSVILLE STANDARD DETAIL 101

LEGEND:

DIRECTION OF FLOW

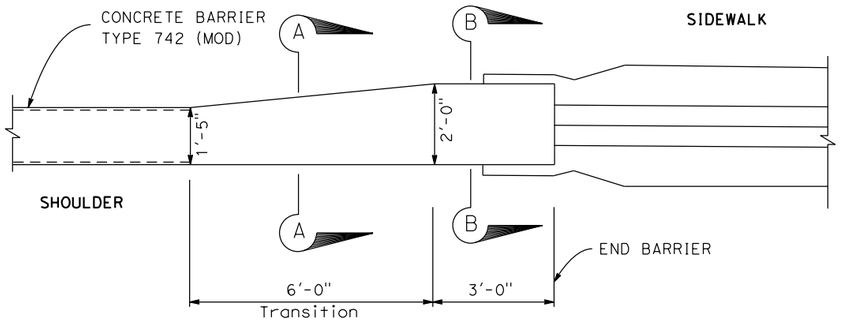

DETAIL B

BARRIER - CRASH CUSHION TRANSITION

NOT TO SCALE

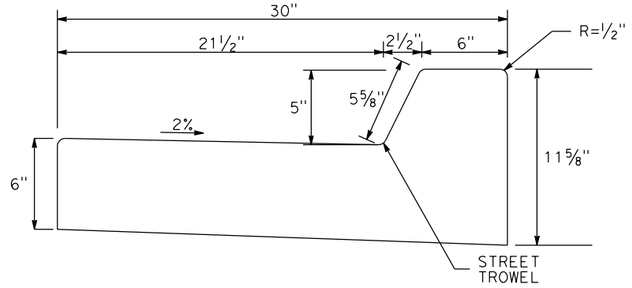

6" BARRIER CURB (MOD)

NO SCALE

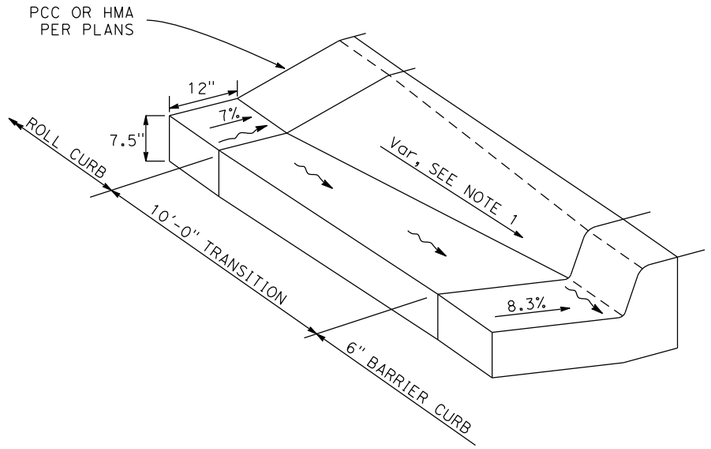

ROLL CURB TRANSITION DETAIL

NO SCALE

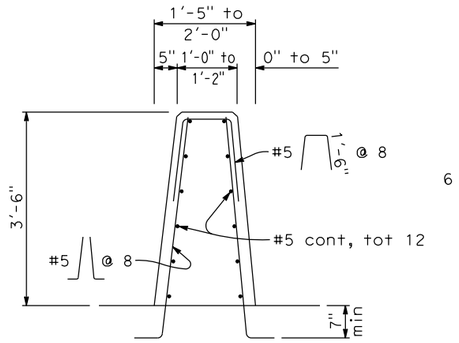

SECTION A-A

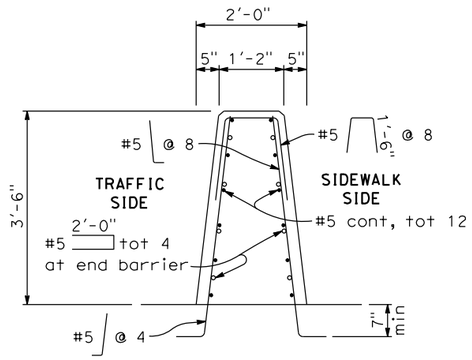

SECTION B-B

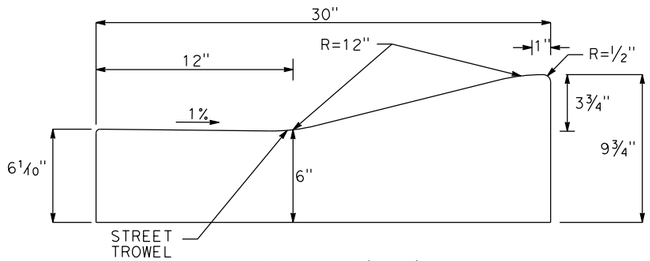

ROLL CURB (MOD)

NO SCALE

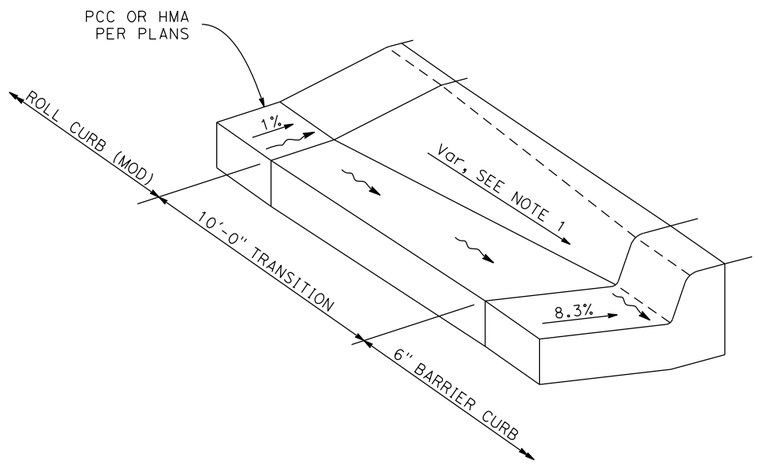

ROLL CURB (MOD) TRANSITION DETAIL

NO SCALE

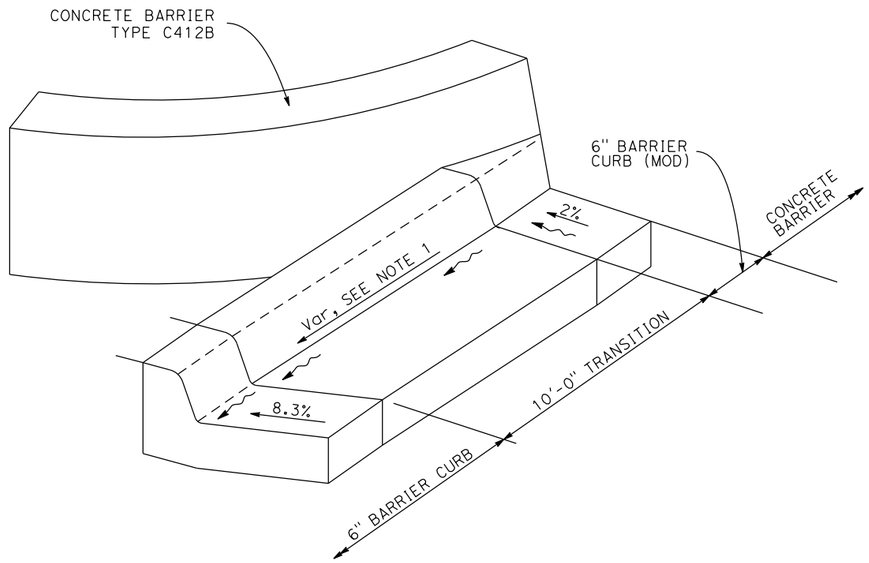

CURB-BARRIER TRANSITION DETAIL

NO SCALE

FOR REDUCED PLANS ORIGINAL SCALE IS IN INCHES

0 1 2 3

ALL DIMENSIONS SHOWN IN FEET UNLESS OTHERWISE NOTED

C-13

8/15/2016

...\5\1\1858g0013.dgn

REVISION #	DATE:	DESCRIPTION AND SHEET NO.:	APPROVED BY:	DATE:

REGISTERED PROFESSIONAL ENGINEER
AMANDA J. LEE
No. 84180
Exp. 9-30-17
CIVIL
STATE OF CALIFORNIA

RETAINING CURB

NOT TO SCALE

REMOVABLE BARRIER

NOT TO SCALE

FOR REDUCED PLANS
ORIGINAL SCALE IS IN INCHES

0 1 2 3

ALL DIMENSIONS SHOWN IN FEET
UNLESS OTHERWISE NOTED

PLAN SCALE: 1"=20'
PROFILE SCALE:
HORIZ:
VERT:

CONTRACT NO: 17-XX

DESIGNED: A. LEE
DRAWN: A. LEE
CHECKED:
RECORD DRAWING: DATE:

DOKKEN ENGINEERING
110 BLUE RAVINE ROAD #200
FOLSOM, CA 95630
PHONE: (916) 858-0642
FAX: (916) 858-0643

CITY OF YUBA CITY

5TH STREET BRIDGE REPLACEMENT
CONSTRUCTION DETAILS

SHEET NO.
OF
215

C-14

8/15/2016

...\511\858g0014.dgn

REVISION #	DATE:	DESCRIPTION AND SHEET NO.:	APPROVED BY:	DATE:

REGISTERED PROFESSIONAL ENGINEER
MEGAN R. CARTER
No. 75885
Exp. 6/30/18
CIVIL
STATE OF CALIFORNIA

PLAN SCALE: 1"=20'
PROFILE SCALE:
HORIZ:
VERT:

CONTRACT NO: 17-XX
DESIGNED: M. CARTER
DRAWN: A. LEE
CHECKED:
RECORD DRAWING:
DATE:

DOKKEN ENGINEERING
110 BLUE RAVINE ROAD #200
FOLSOM, CA 95630
PHONE: (916) 858-0642
FAX: (916) 985-1845

CITY OF YUBA CITY

5TH STREET BRIDGE REPLACEMENT
CONSTRUCTION DETAILS

SHEET NO.
OF
215

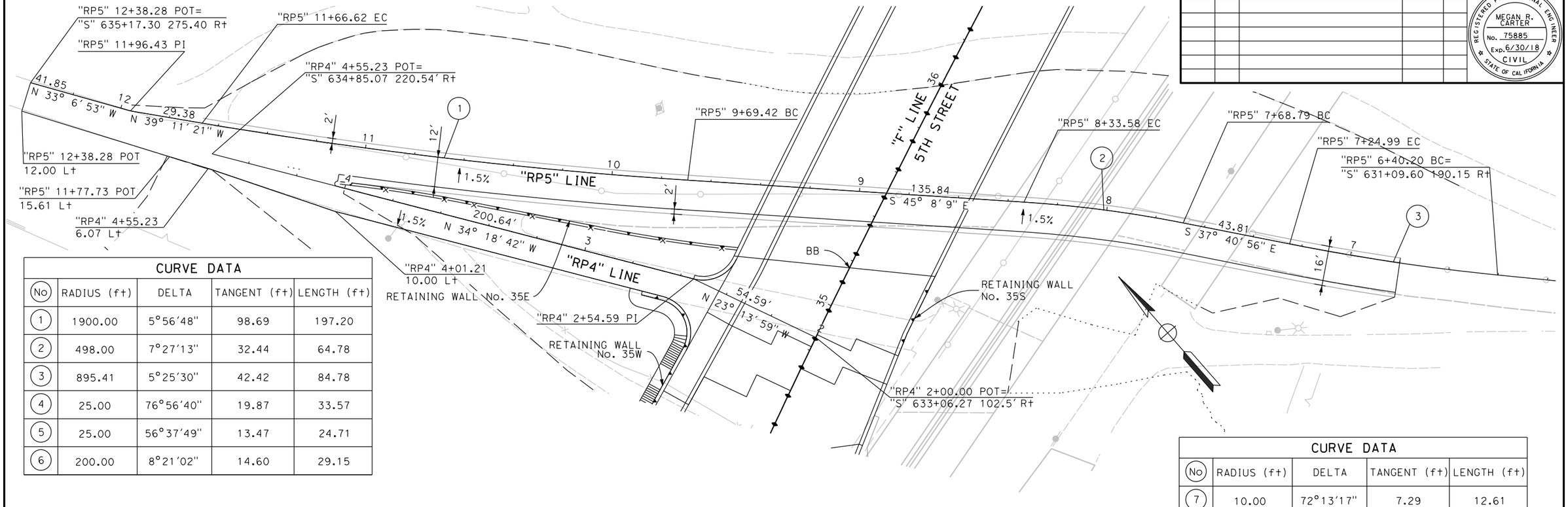

CURVE DATA				
No	RADIUS (ft)	DELTA	TANGENT (ft)	LENGTH (ft)
1	1900.00	5°56'48"	98.69	197.20
2	498.00	7°27'13"	32.44	64.78
3	895.41	5°25'30"	42.42	84.78
4	25.00	76°56'40"	19.87	33.57
5	25.00	56°37'49"	13.47	24.71
6	200.00	8°21'02"	14.60	29.15

"RP4" & "RP5" PLAN VIEW

SCALE: 1"=20'

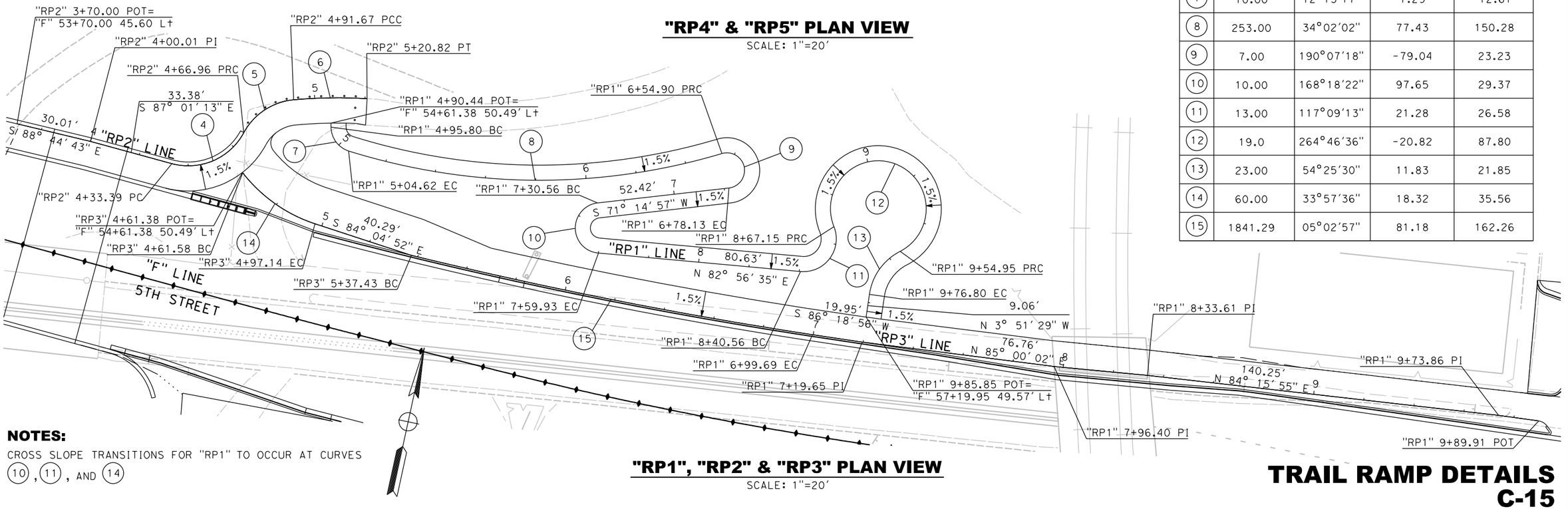

CURVE DATA				
No	RADIUS (ft)	DELTA	TANGENT (ft)	LENGTH (ft)
7	10.00	72°13'17"	7.29	12.61
8	253.00	34°02'02"	77.43	150.28
9	7.00	190°07'18"	-79.04	23.23
10	10.00	168°18'22"	97.65	29.37
11	13.00	117°09'13"	21.28	26.58
12	19.0	264°46'36"	-20.82	87.80
13	23.00	54°25'30"	11.83	21.85
14	60.00	33°57'36"	18.32	35.56
15	1841.29	05°02'57"	81.18	162.26

"RP1", "RP2" & "RP3" PLAN VIEW

SCALE: 1"=20'

NOTES:

CROSS SLOPE TRANSITIONS FOR "RP1" TO OCCUR AT CURVES (10), (11), AND (14)

TRAIL RAMP DETAILS
C-15

FOR REDUCED PLANS ORIGINAL SCALE IS IN INCHES 0 1 2 3

ALL DIMENSIONS SHOWN IN FEET UNLESS OTHERWISE NOTED

8/15/2016

...\511\1858ga015.dgn

REVISION #	DATE:	DESCRIPTION AND SHEET NO.:	APPROVED BY:	DATE:

REGISTERED PROFESSIONAL ENGINEER
MEGAN R. CARTER
No. 75885
Exp. 6/30/18
CIVIL
STATE OF CALIFORNIA

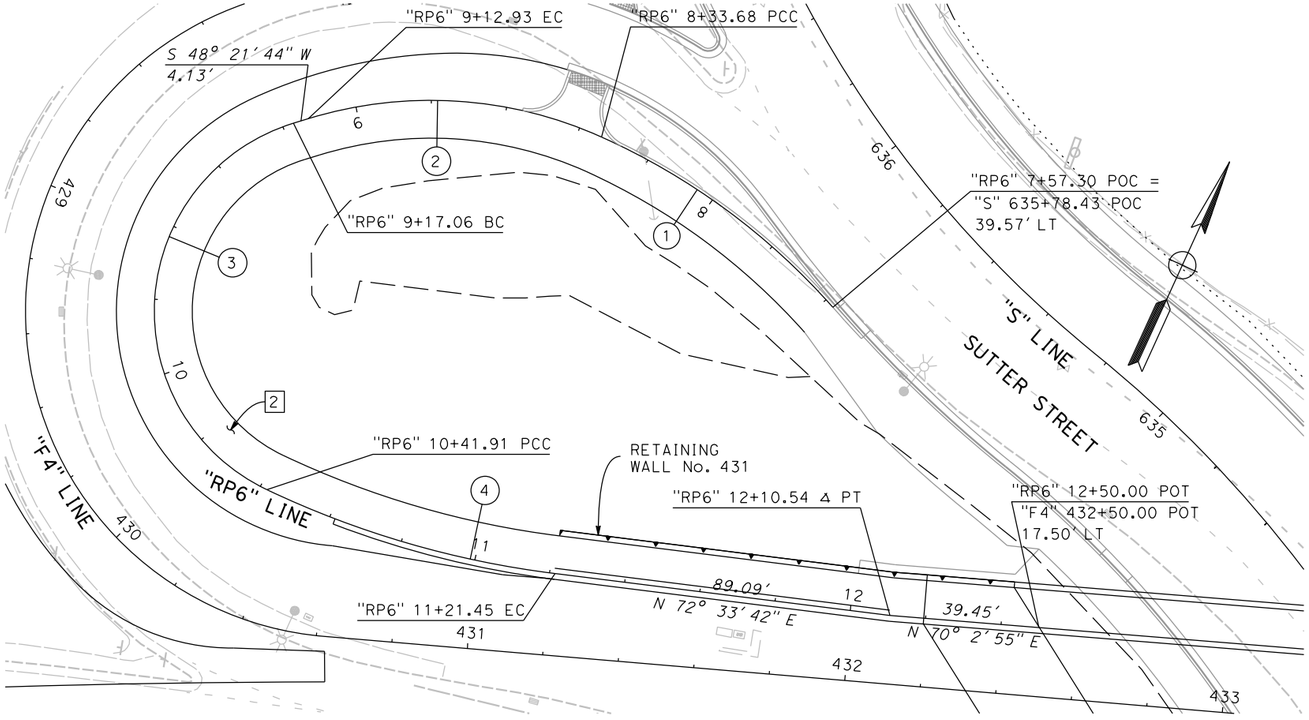

"RP6" PLAN VIEW

SCALE: 1"=20'

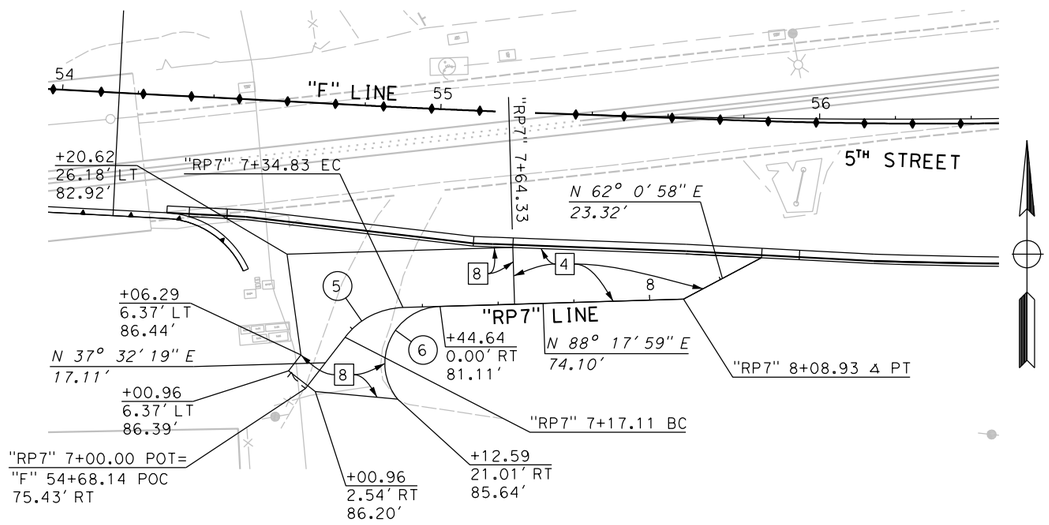

"RP7" PLAN VIEW

SCALE: 1"=20'

CURVE DATA				
No	RADIUS (ft)	DELTA	TANGENT (ft)	LENGTH (ft)
1	180.00	24°18'51"	38.78	76.38
2	110.00	41°16'41"	41.43	79.25
3	52.00	137°34'16"	133.96	124.86
4	250.00	18°13'46"	40.11	79.54
5	20.00	50°45'39"	9.49	17.72
6	15.00	127°34'05"	30.46	33.40

TRAIL RAMP DETAILS
C-16

FOR REDUCED PLANS
ORIGINAL SCALE IS IN INCHES

0 1 2 3

ALL DIMENSIONS SHOWN IN FEET
UNLESS OTHERWISE NOTED

PLAN SCALE: 1"=20'
PROFILE SCALE:
HORIZ:
VERT:

CONTRACT NO: 17-XX
DESIGNED: M. CARTER
DRAWN: A. LEE
CHECKED:
RECORD DRAWING:
DATE:

DOKKEN ENGINEERING
110 BLUE RAVINE ROAD #200
FOLSOM, CA 95630
PHONE: (916) 858-0642
FAX: (916) 985-1845

CITY OF YUBA CITY

5TH STREET BRIDGE REPLACEMENT
CONSTRUCTION DETAILS

SHEET NO.
OF
215

8/15/2016
...\5111\1858g0016.dgn

REVISION #	DATE:	DESCRIPTION AND SHEET NO.:	APPROVED BY:	DATE:

REGISTERED PROFESSIONAL ENGINEER
MEGAN R. CARTER
No. 75885
Exp. 6/30/18
CIVIL
STATE OF CALIFORNIA

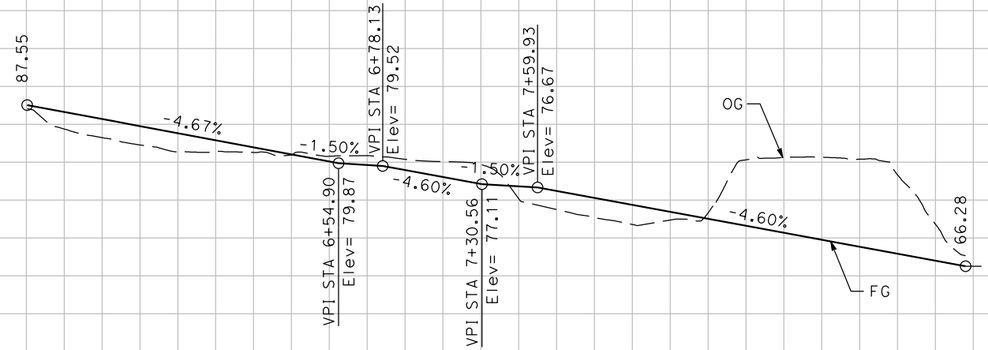

'RP1' PROFILE

HORIZ: 1"=40'
VERT: 1"=10'

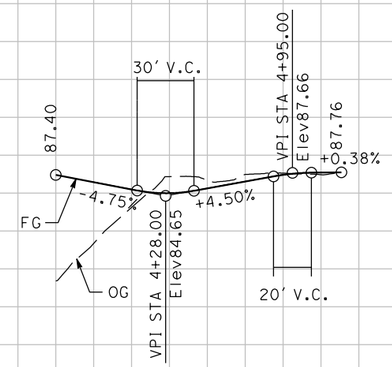

'RP2' PROFILE

HORIZ: 1"=40'
VERT: 1"=10'

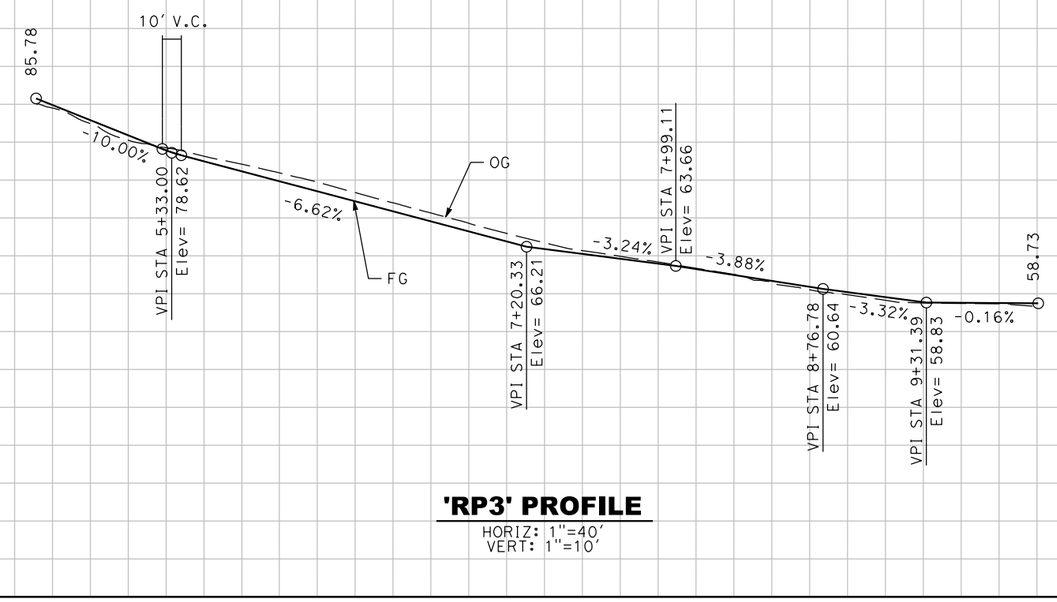

'RP3' PROFILE

HORIZ: 1"=40'
VERT: 1"=10'

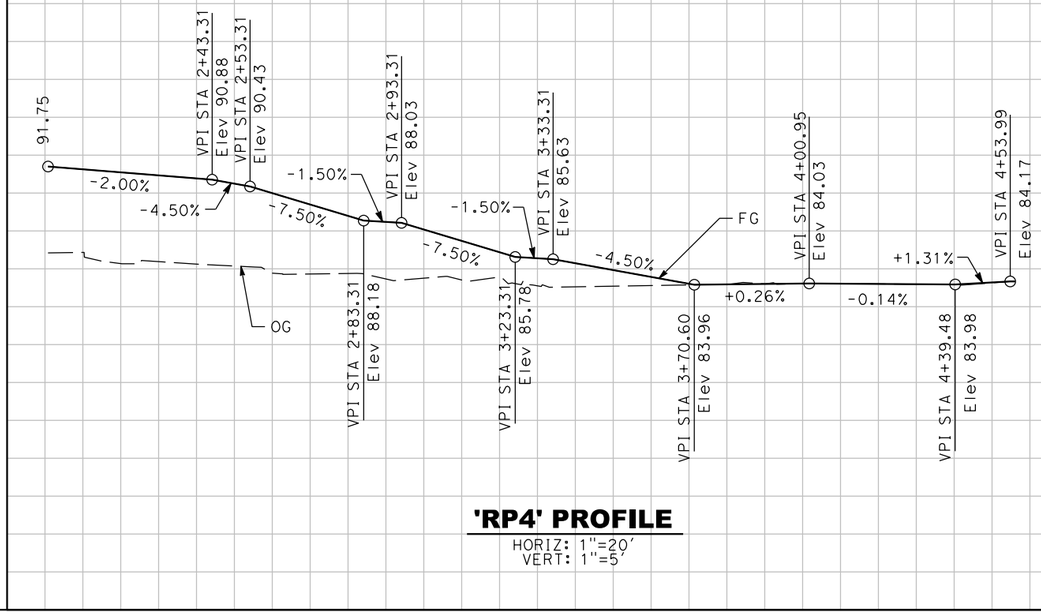

'RP4' PROFILE

HORIZ: 1"=20'
VERT: 1"=5'

TRAIL RAMP PROFILES

C-17

FOR REDUCED PLANS
ORIGINAL SCALE IS IN INCHES

0 1 2 3

ALL DIMENSIONS SHOWN IN FEET
UNLESS OTHERWISE NOTED

PLAN SCALE: 1"=40'
PROFILE SCALE:
HORIZ: 1"=40'
VERT: 1"=10'

CONTRACT NO: 17-XX
DESIGNED: M. CARTER
DRAWN: A. LEE
CHECKED:
RECORD DRAWING: DATE:

DOKKEN ENGINEERING
110 BLUE RAVINE ROAD #200
FOLSOM, CA 95630
PHONE: (916) 858-0642
FAX: (916) 858-0643

CITY OF YUBA CITY

5TH STREET BRIDGE REPLACEMENT
CONSTRUCTION DETAILS

SHEET NO.
OF
215

8/15/2016

...\5111\1858g0017.dgn

REVISION #	DATE:	DESCRIPTION AND SHEET NO.:	APPROVED BY:	DATE:

REGISTERED PROFESSIONAL ENGINEER
MEGAN R. CARTER
No. 75885
Exp. 6/30/18
CIVIL
STATE OF CALIFORNIA

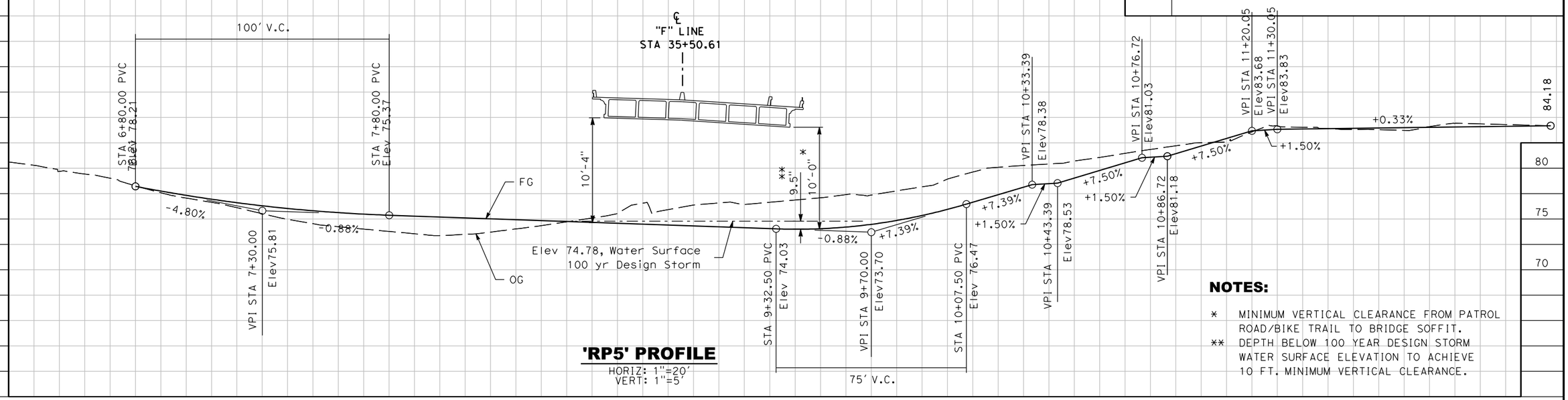

'RP5' PROFILE
HORIZ: 1"=20'
VERT: 1"=5'

NOTES:

* MINIMUM VERTICAL CLEARANCE FROM PATROL ROAD/BIKE TRAIL TO BRIDGE SOFFIT.

** DEPTH BELOW 100 YEAR DESIGN STORM WATER SURFACE ELEVATION TO ACHIEVE 10 FT. MINIMUM VERTICAL CLEARANCE.

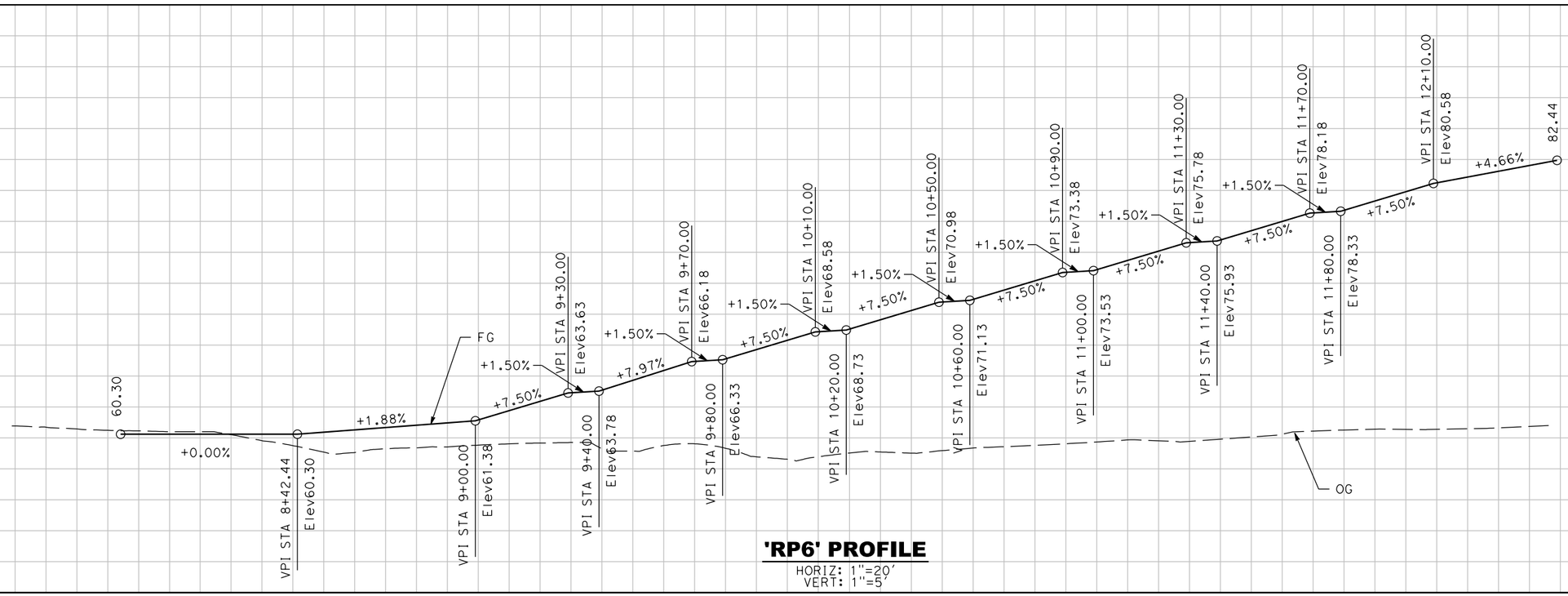

'RP6' PROFILE
HORIZ: 1"=20'
VERT: 1"=5'

TRAIL RAMP PROFILES

C-18

FOR REDUCED PLANS ORIGINAL SCALE IS IN INCHES 0 1 2 3

ALL DIMENSIONS SHOWN IN FEET UNLESS OTHERWISE NOTED

8/15/2016

...\5111\858ga018.dgn

PLAN SCALE: 1"=20'
PROFILE SCALE:
HORIZ: 1"=20'
VERT: 1"=5'

CONTRACT NO: 17-XX
DESIGNED: M. CARTER
DRAWN: A. LEE
CHECKED:
RECORD DRAWING: DATE:

DOKKEN ENGINEERING
110 BLUE RAVINE ROAD #200
FOLSOM, CA 95630
PHONE: (916) 858-0642
FAX: (916) 985-1845

CITY OF YUBA CITY

5TH STREET BRIDGE REPLACEMENT
CONSTRUCTION DETAILS

SHEET NO.
OF
215

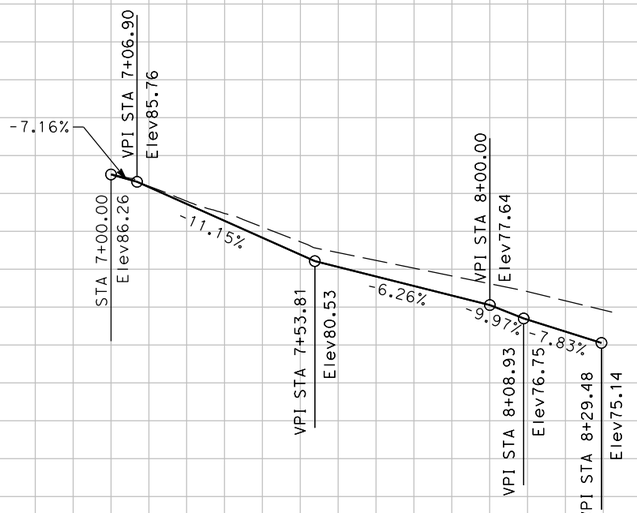

'RP7' PROFILE

HORIZ: 1"=20'
VERT: 1"=5'

REVISION #	DATE:	DESCRIPTION AND SHEET NO.:	APPROVED BY:	DATE:

REGISTERED PROFESSIONAL ENGINEER
MEGAN R. CARTER
No. 75885
Exp. 6/30/18
CIVIL
STATE OF CALIFORNIA

PLAN SCALE: 1"=20'
PROFILE SCALE:
HORIZ: 1"=20'
VERT: 1"=5'

CONTRACT NO: 17-XX
DESIGNED: M. CARTER
DRAWN: A. LEE
CHECKED:
RECORD DRAWING: DATE:

DOKKEN ENGINEERING
110 BLUE RAVINE ROAD #200
FOLSOM, CA 95630
PHONE: (916) 858-0642
FAX: (916) 858-0643

CITY OF YUBA CITY

5TH STREET BRIDGE REPLACEMENT
CONSTRUCTION DETAILS

SHEET NO.
OF
215

TRAIL RAMP PROFILES C-19

FOR REDUCED PLANS
ORIGINAL SCALE IS IN INCHES
0 1 2 3
ALL DIMENSIONS SHOWN IN FEET
UNLESS OTHERWISE NOTED

8/15/2016
...\5I\1858g0019.dgn

REVISION #	DATE:	DESCRIPTION AND SHEET NO.:	APPROVED BY:	DATE:

REGISTERED PROFESSIONAL ENGINEER
AMANDA J. LEE
No. 84180
Exp. 9-30-17
CIVIL
STATE OF CALIFORNIA

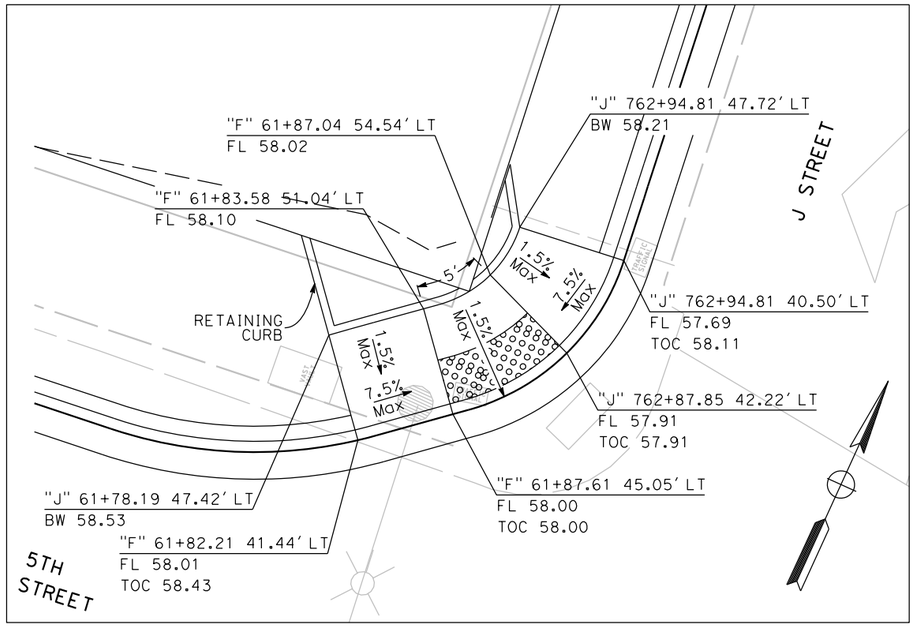

J - 5TH WEST
SCALE: 1"=5'

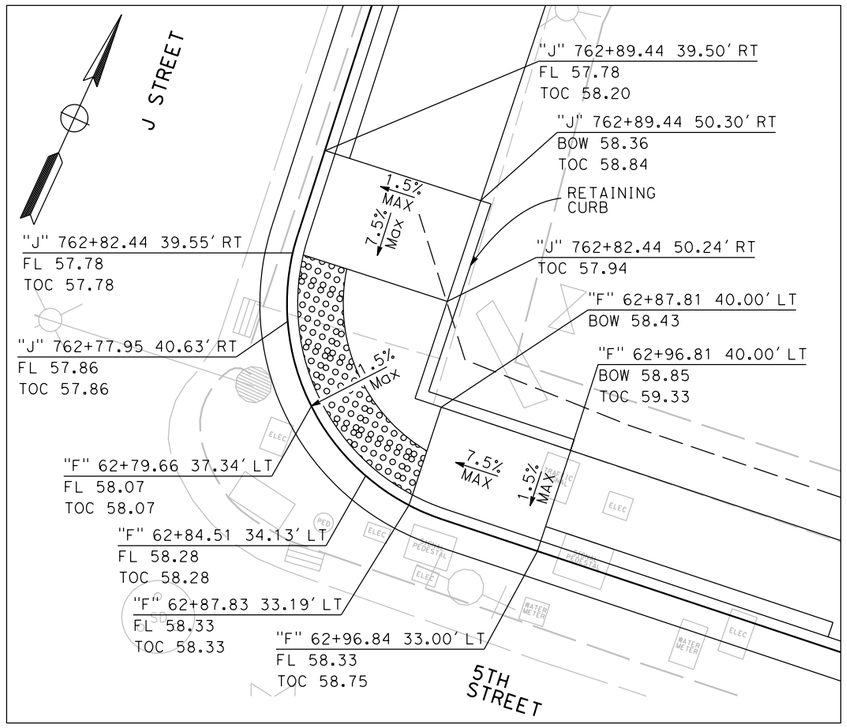

5TH - J NORTH
SCALE: 1"=5'

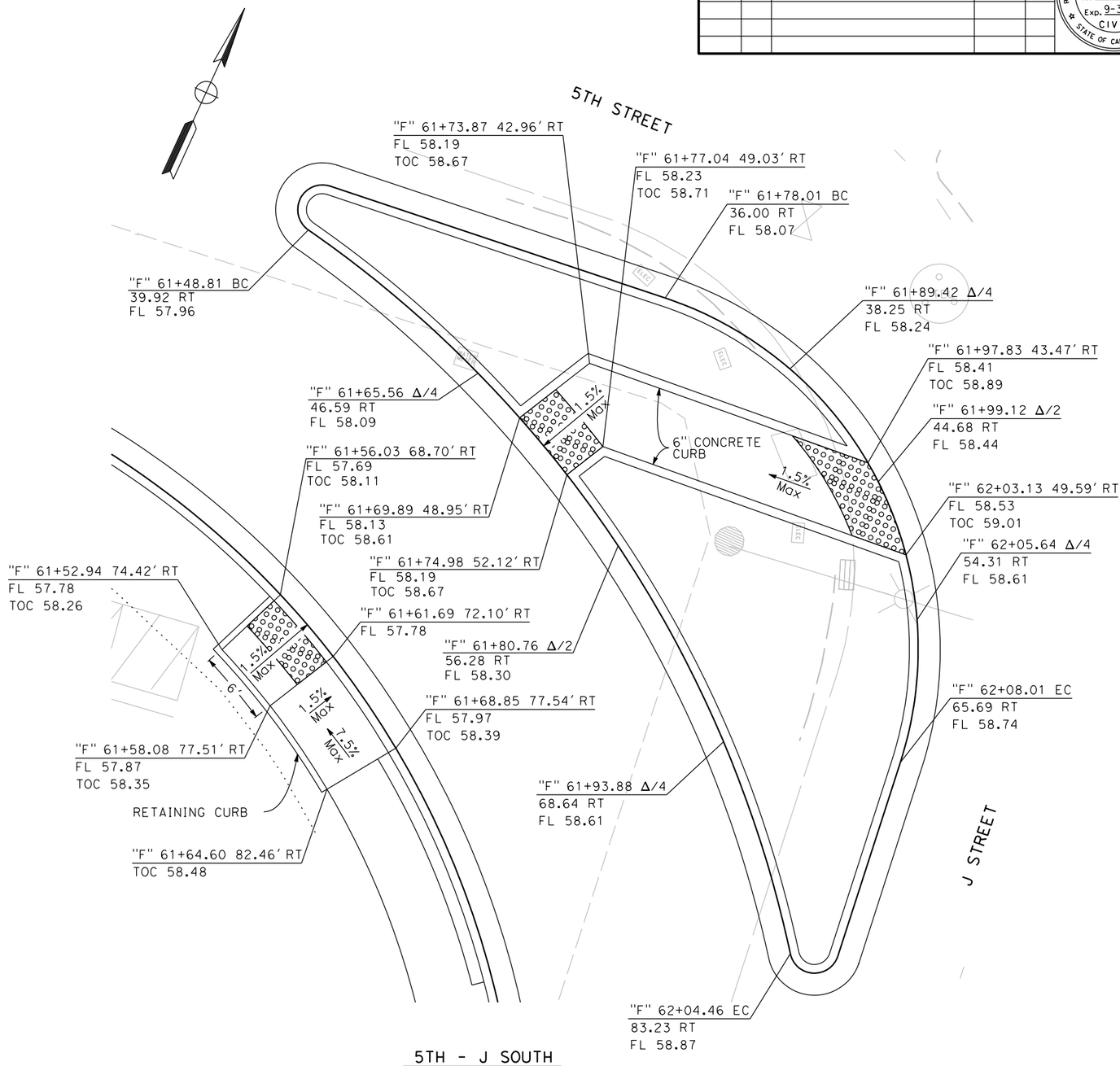

5TH - J SOUTH
SCALE: 1"=5'

NOTES:

1. ALL DETECTABLE WARNING SURFACES IN MARYSVILLE TO BE RED.
2. ALL DETECTABLE WARNING SURFACES IN YUBA CITY TO BE YELLOW.

FOR REDUCED PLANS
ORIGINAL SCALE IS IN INCHES
0 1 2 3
ALL DIMENSIONS SHOWN IN FEET
UNLESS OTHERWISE NOTED

CURB RAMP DETAILS

C-20

PLAN SCALE:
PROFILE SCALE:
HORIZ:
VERT:

CONTRACT NO: 17-XX
DESIGNED: A. LEE
DRAWN: A. LEE
CHECKED:
RECORD DRAWING:
DATE:

DOKKEN ENGINEERING
110 BLUE RAVINE ROAD #200
FOLSOM, CA 95630
PHONE: (916) 858-0642
FAX: (916) 985-1845

CITY OF YUBA CITY

5TH STREET BRIDGE REPLACEMENT
CONSTRUCTION DETAILS

SHEET NO.
OF
215

8/15/2016
...\511\1858ga020.dgn

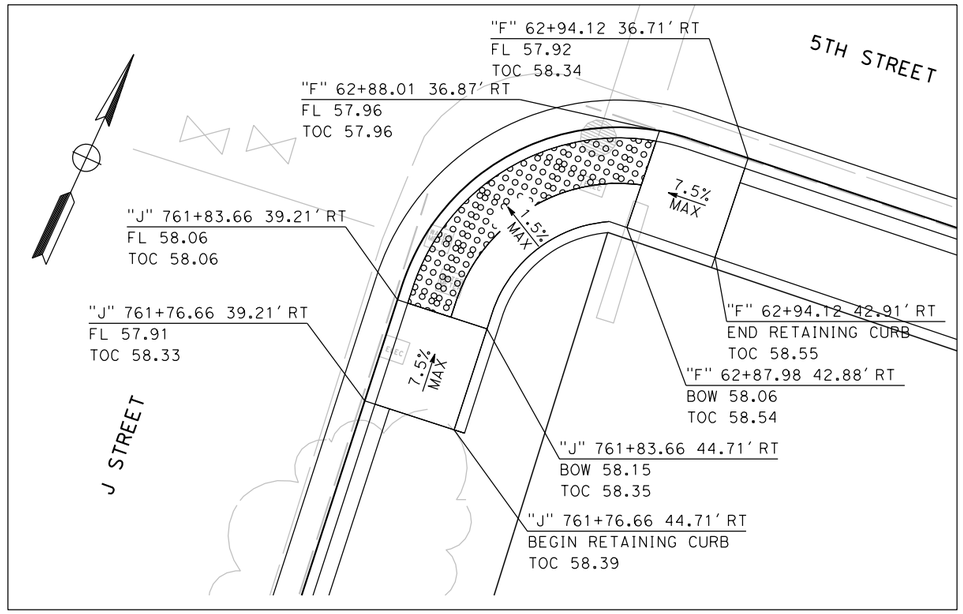

J - 5TH EAST

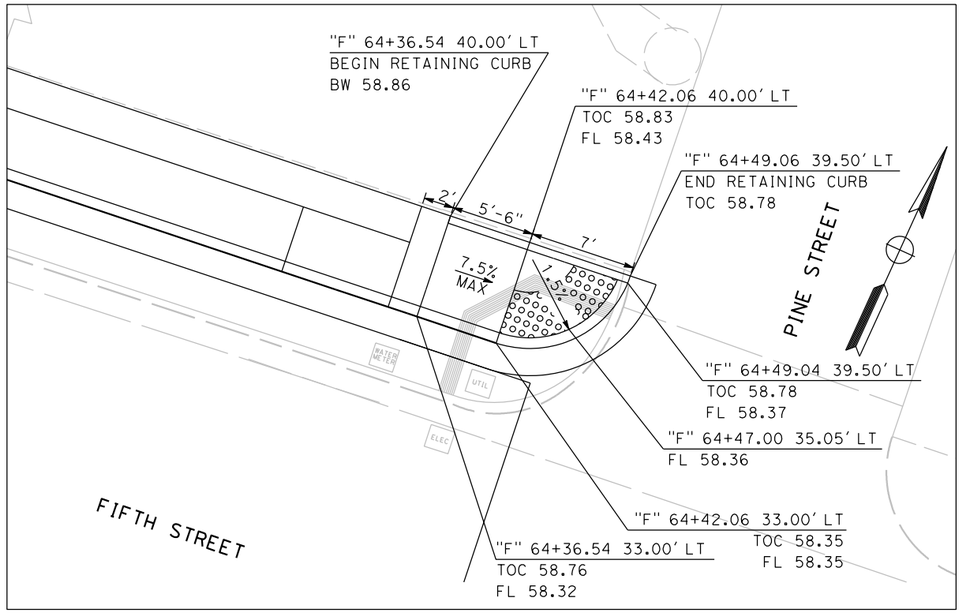

PINE - WEST

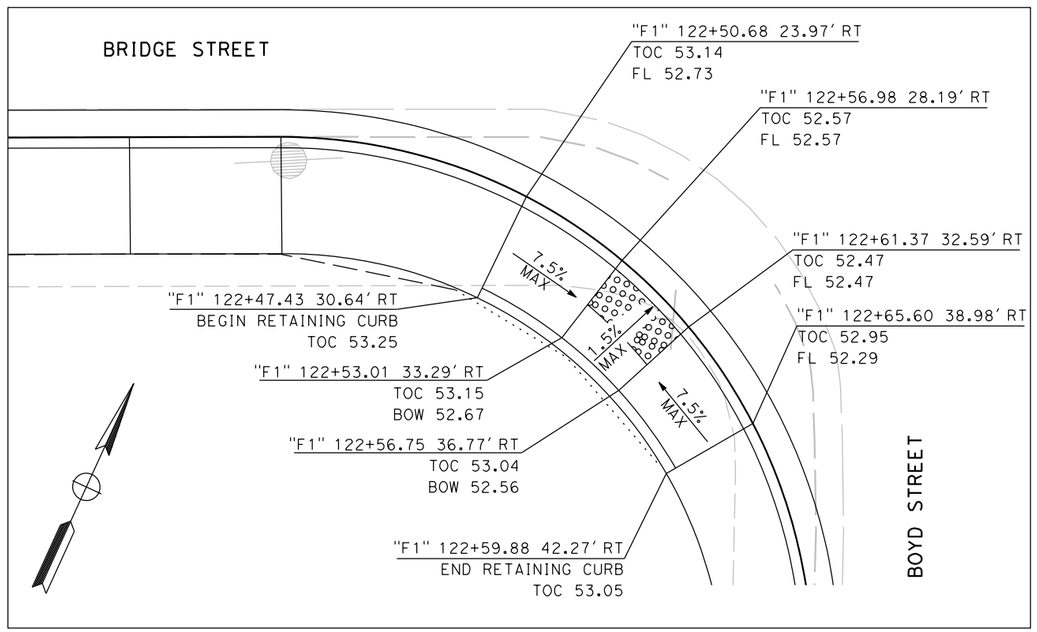

BRIDGE - BOYD

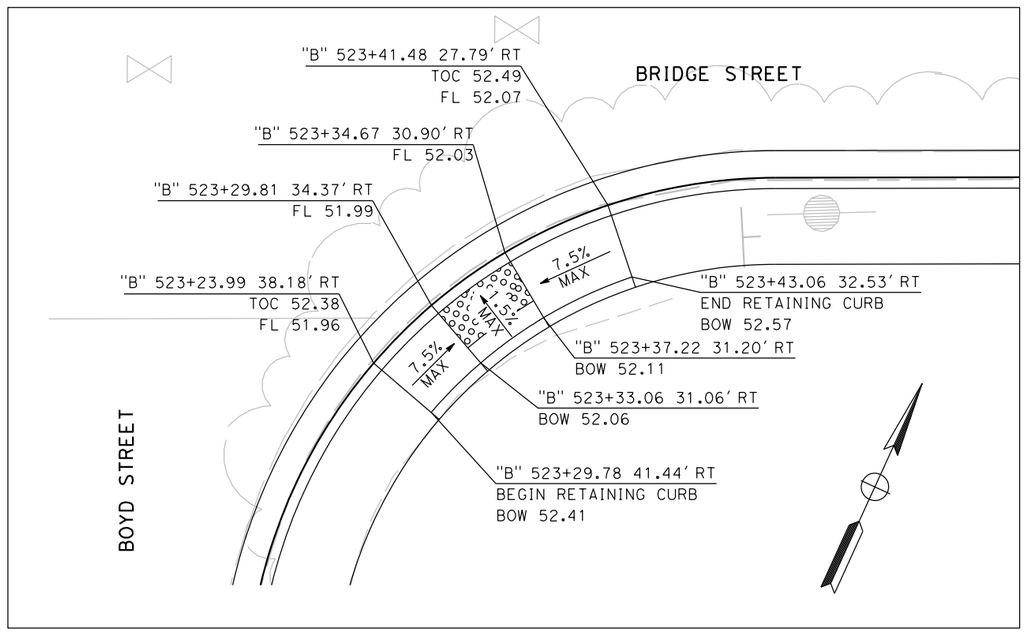

BOYD - BRIDGE

REVISION #	DATE:	DESCRIPTION AND SHEET NO.:	APPROVED BY:	DATE:

REGISTERED PROFESSIONAL ENGINEER
AMANDA J. LEE
No. 84180
Exp. 9-30-17
CIVIL
STATE OF CALIFORNIA

PLAN SCALE:
PROFILE SCALE:
HORIZ:
VERT:

CONTRACT NO: 17-XX
DESIGNED: A. LEE
DRAWN: A. LEE
CHECKED:
RECORD DRAWING:
DATE:

DOKKEN ENGINEERING
110 BLUE RAVINE ROAD #200
FOLSOM, CA 95630
PHONE: (916) 858-0642
FAX: (916) 858-0643

CITY OF YUBA CITY

5TH STREET BRIDGE REPLACEMENT
CONSTRUCTION DETAILS

SHEET NO.
OF
215

8/15/2016

...\5111\1858ga021.dgn

FOR REDUCED PLANS
ORIGINAL SCALE IS IN INCHES
0 1 2 3
ALL DIMENSIONS SHOWN IN FEET
UNLESS OTHERWISE NOTED

CURB RAMP DETAILS

C-21

REVISION #	DATE	DESCRIPTION AND SHEET NO.	APPROVED BY	DATE

REGISTERED PROFESSIONAL ENGINEER
AMANDA J. LEE
No. 84180
Exp. 9-30-17
CIVIL
STATE OF CALIFORNIA

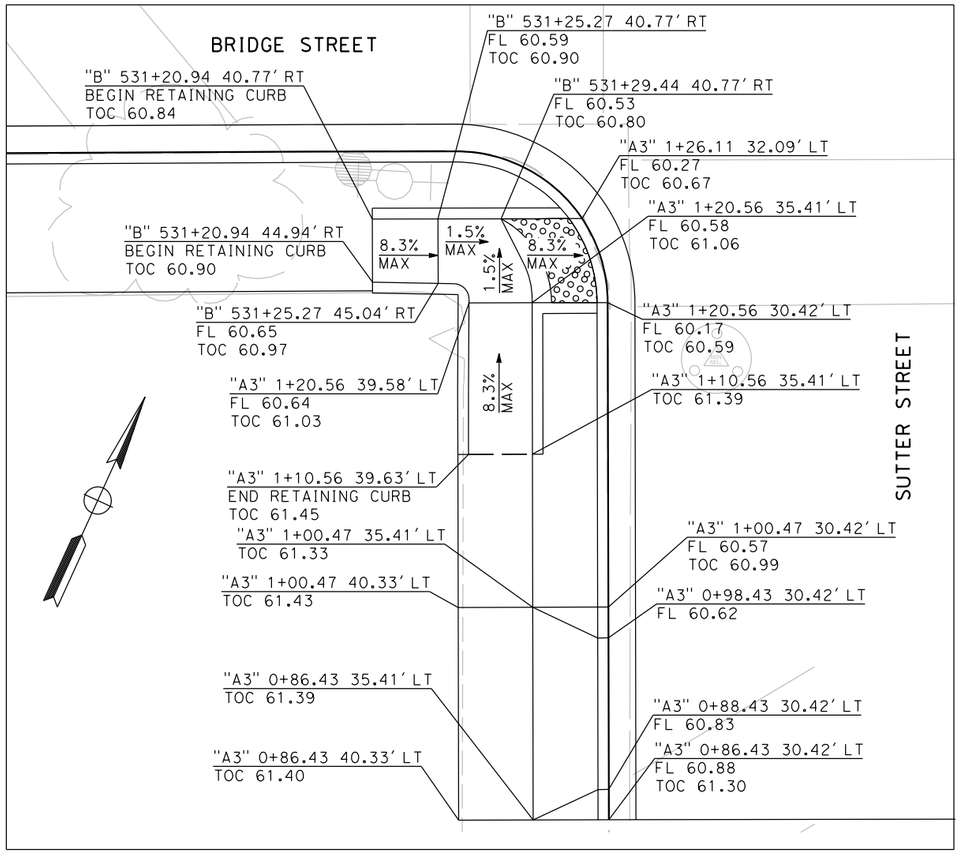

BRIDGE - SUTTER

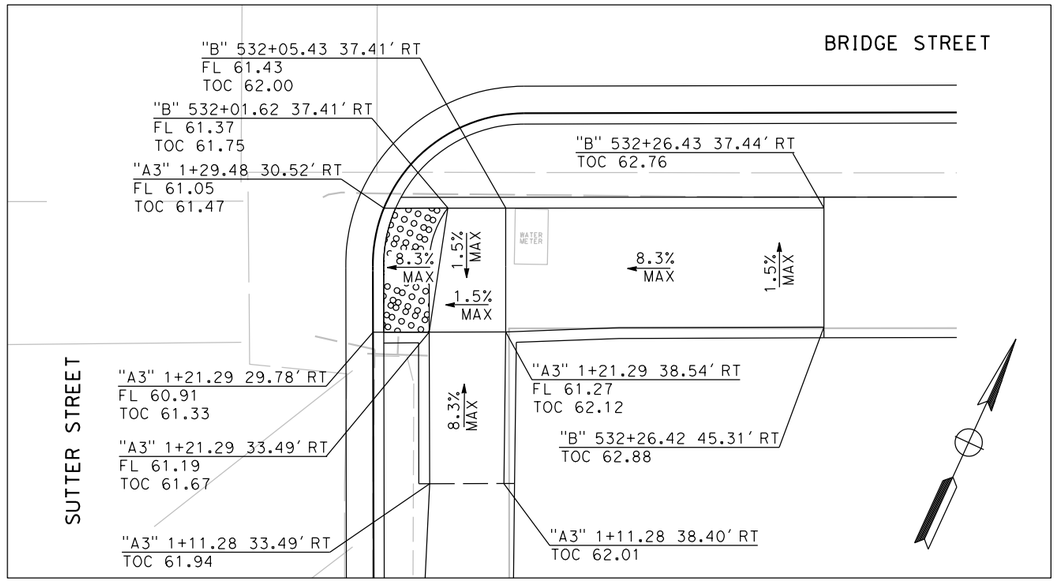

SUTTER - BRIDGE

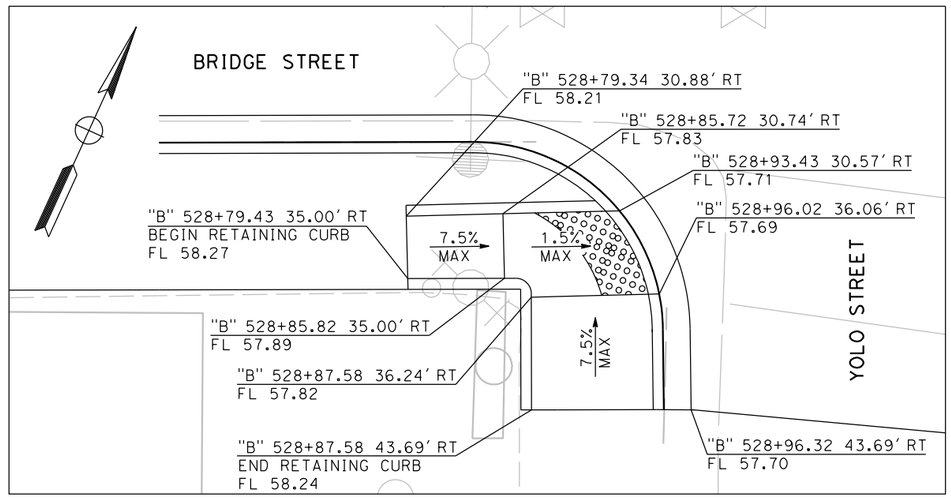

BRIDGE - YOLO

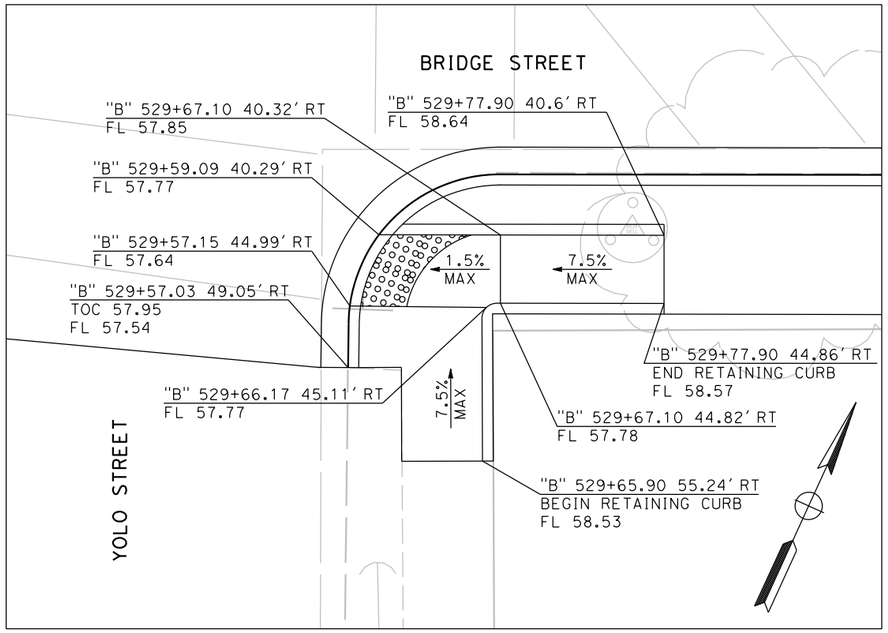

YOLO - BRIDGE

CURB RAMP DETAILS

C-22

FOR REDUCED PLANS
ORIGINAL SCALE IS IN INCHES

0 1 2 3

ALL DIMENSIONS SHOWN IN FEET
UNLESS OTHERWISE NOTED

PLAN SCALE:
PROFILE SCALE:
HORIZ:
VERT:

CONTRACT NO: 17-XX
DESIGNED: A. LEE
DRAWN: A. LEE
CHECKED:
RECORD DRAWING:
DATE:

DOKKEN ENGINEERING
110 BLUE RAVINE ROAD #200
FOLSOM, CA 95630
PHONE: (916) 858-0642
FAX: (916) 985-1845

CITY OF YUBA CITY

5TH STREET BRIDGE REPLACEMENT
CONSTRUCTION DETAILS

SHEET NO.
OF
215

8/15/2016

...\511\1858ga022.dgn

REVISION #	DATE:	DESCRIPTION AND SHEET NO.:	APPROVED BY:	DATE:

REGISTERED PROFESSIONAL ENGINEER
AMANDA J. LEE
No. 84180
Exp. 9-30-17
CIVIL
STATE OF CALIFORNIA

PLAN SCALE:
PROFILE SCALE:
HORIZ:
VERT:

CONTRACT NO: 17-XX
DESIGNED: A. LEE
DRAWN: A. LEE
CHECKED:
RECORD DRAWING: DATE:

DOKKEN ENGINEERING
110 BLUE RAVINE ROAD #200
FOLSOM, CA 95630
PHONE: (916) 858-0642
FAX: (916) 985-1486

CITY OF YUBA CITY

5TH STREET BRIDGE REPLACEMENT
CONSTRUCTION DETAILS

SHEET NO.
OF
215

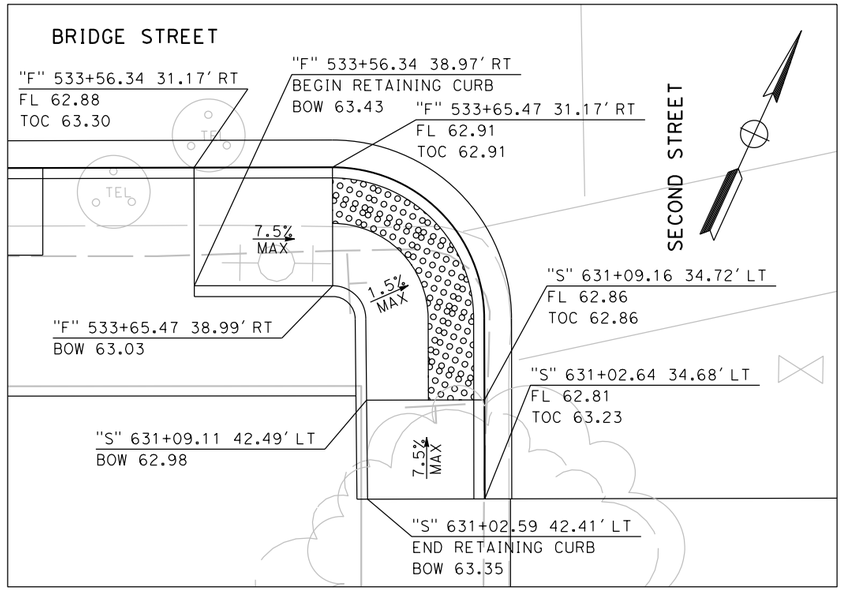

BRIDGE - SECOND
SCALE: 1"=5'

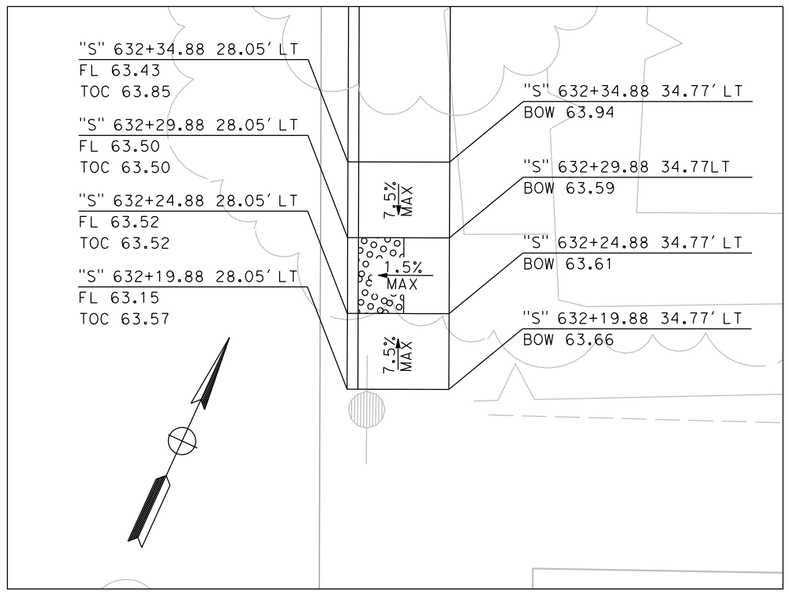

SECOND - VETERANS PARK
SCALE: 1"=5'

CURVE DATA				
No	RADIUS (ft)	DELTA	TANGENT (ft)	LENGTH (ft)
1	2.21	70° 00' 37"	1.55	2.70
2	2.21	77° 19' 11"	1.77	2.98
3	305.71	2° 23' 59"	6.40	12.80
4	2.21	99° 04' 55"	2.59	3.82
5	2.21	121° 18' 39"	3.93	3.08
6	77.36	10° 07' 21"	6.85	13.67

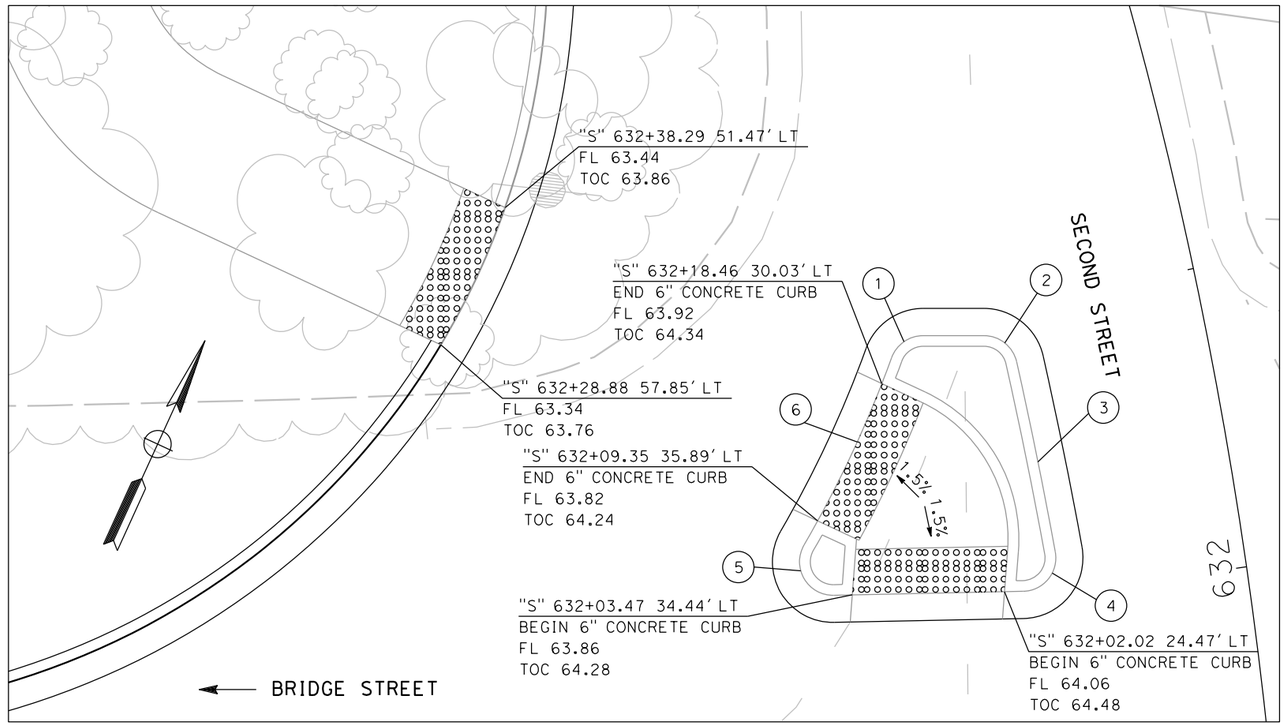

SECOND - BRIDGE

CURB RAMP DETAILS

C-23

FOR REDUCED PLANS
ORIGINAL SCALE IS IN INCHES
0 1 2 3
ALL DIMENSIONS SHOWN IN FEET
UNLESS OTHERWISE NOTED

8/15/2016
...\511\1858ga023.dgn

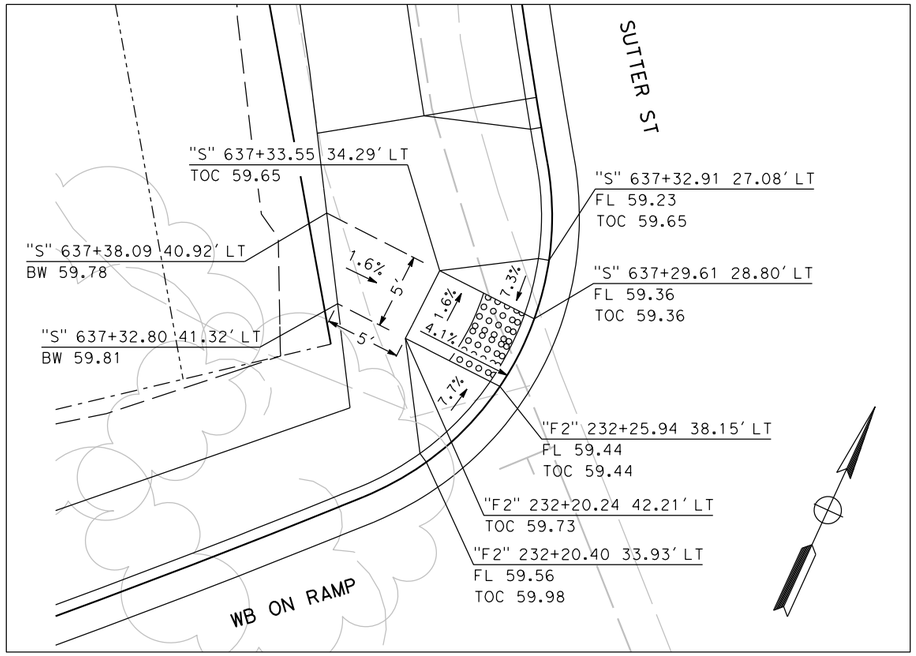

SUTTER - WB ON
SCALE: 1"=5'

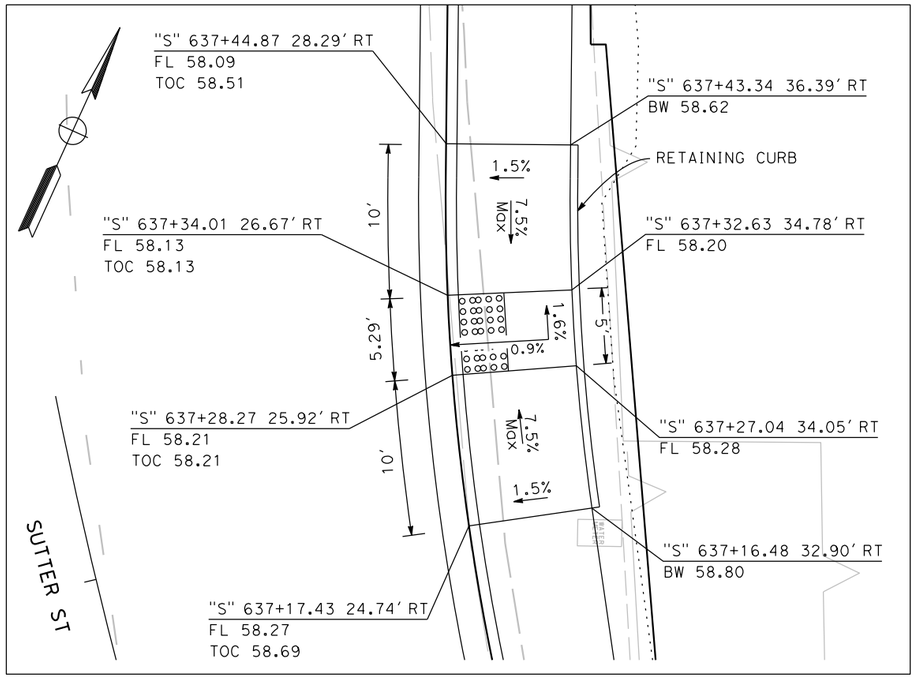

SUTTER - EAST
SCALE: 1"=5'

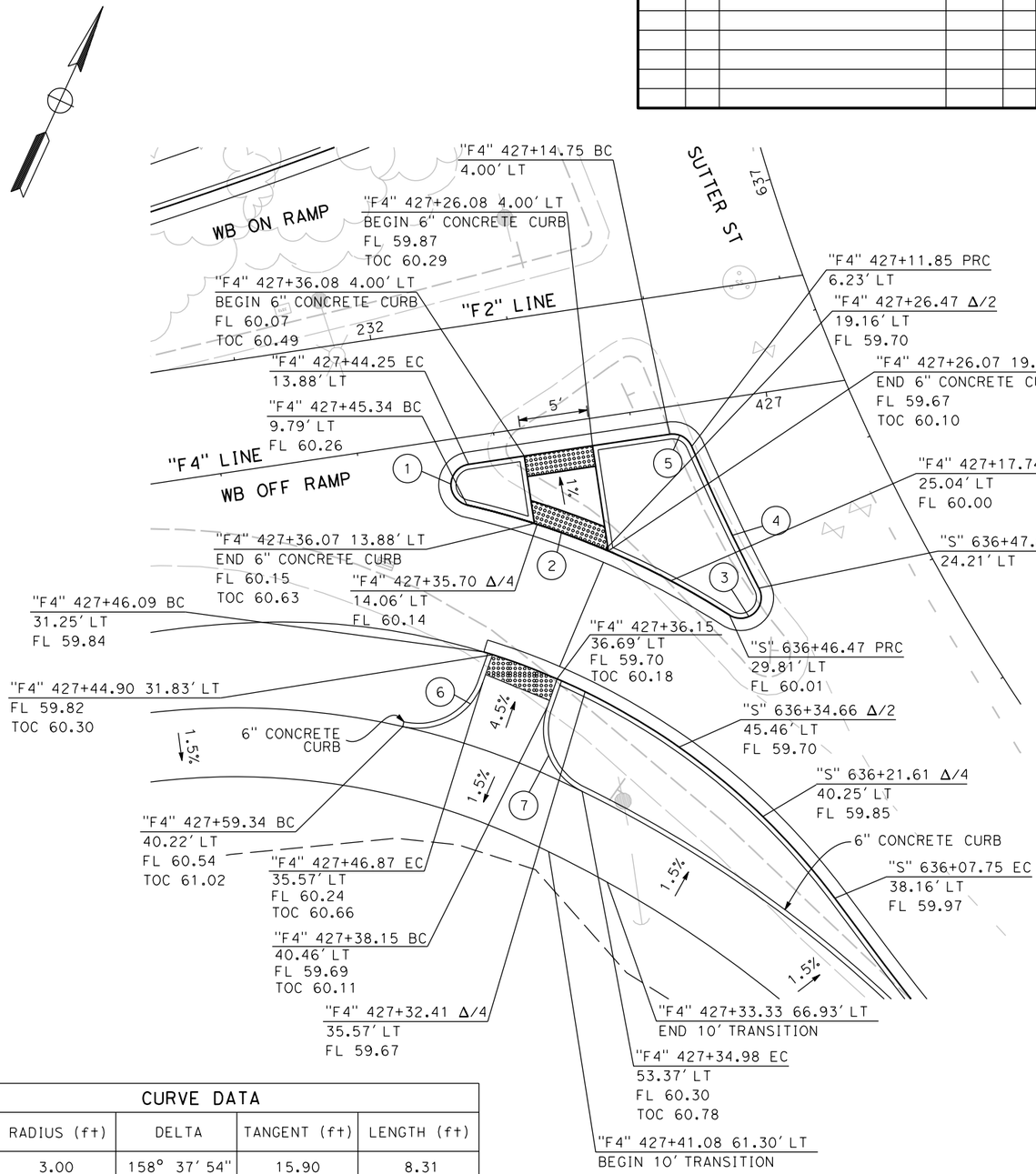

WB OFF - SUTTER
SCALE: 1"=10'

CURVE DATA				
No	RADIUS (ft)	DELTA	TANGENT (ft)	LENGTH (ft)
1	3.00	158° 37' 54"	15.90	8.31
2	120.00	10° 17' 54"	10.81	21.57
3	3.00	150° 04' 00"	11.22	9.54
4	324.21	4° 01' 10"	11.38	22.74
5	3.00	75° 07' 36"	2.31	1.56
6	9.29	83° 23' 09"	8.28	13.52
7	9.29	83° 19' 04"	8.27	13.51

FOR REDUCED PLANS
ORIGINAL SCALE IS IN INCHES
0 1 2 3
ALL DIMENSIONS SHOWN IN FEET
UNLESS OTHERWISE NOTED

REVISION #	DATE:	DESCRIPTION AND SHEET NO.:	APPROVED BY:	DATE:

REGISTERED PROFESSIONAL ENGINEER
AMANDA J. LEE
No. 84180
Exp. 9-30-17
CIVIL
STATE OF CALIFORNIA

PLAN SCALE:
PROFILE SCALE:
HORIZ:
VERT:

CONTRACT NO: 17-XX
DESIGNED: A. LEE
DRAWN: A. LEE
CHECKED:
RECORD DRAWING:
DATE:

DOKKEN ENGINEERING
110 BLUE RAVINE ROAD #200
FOLSOM, CA 95630
PHONE: (916) 858-0642
FAX: (916) 985-1845

CITY OF YUBA CITY

5TH STREET BRIDGE REPLACEMENT
CONSTRUCTION DETAILS

SHEET NO.
OF
215

CURB RAMP DETAILS

C-24

8/15/2016
...\511\1858ga024.dgn

REVISION #	DATE	DESCRIPTION AND SHEET NO.	APPROVED BY	DATE

REGISTERED PROFESSIONAL ENGINEER
MEGAN R. CARTER
No. 75885
Exp. 6/30/18
CIVIL
STATE OF CALIFORNIA

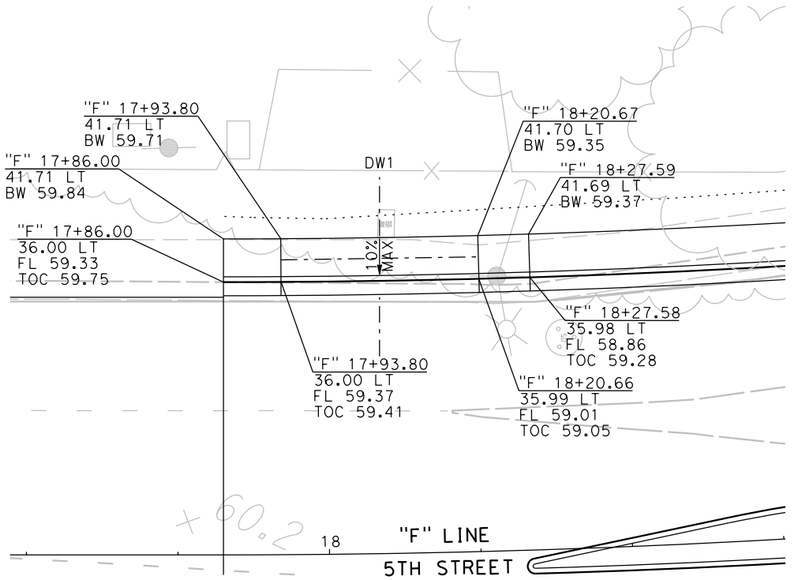

CEMETERY DRIVEWAY

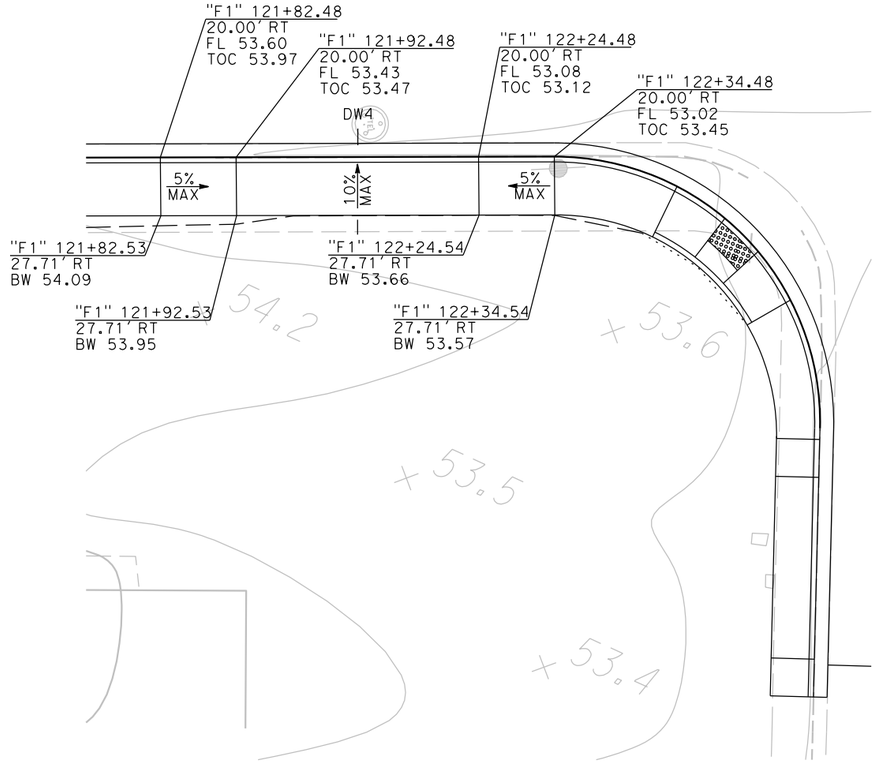

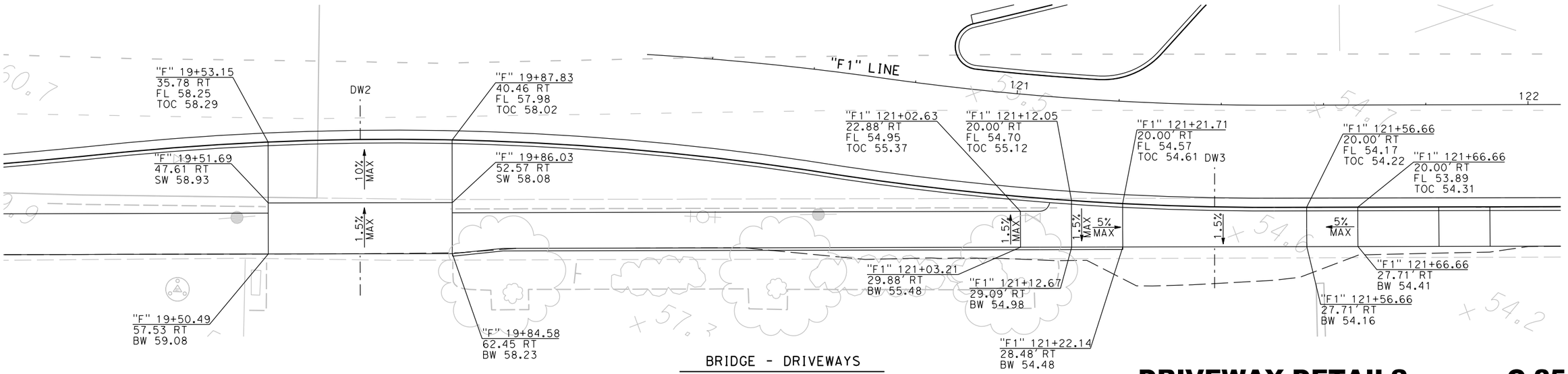

BRIDGE - DRIVEWAYS

FOR REDUCED PLANS
ORIGINAL SCALE IS IN INCHES

0 1 2 3

ALL DIMENSIONS SHOWN IN FEET
UNLESS OTHERWISE NOTED

DRIVEWAY DETAILS

C-25

PLAN SCALE: 1"=10'
PROFILE SCALE:
HORIZ:
VERT:

CONTRACT NO: 17-XX
DESIGNED: M. CARTER
DRAWN: A. LEE
CHECKED:
RECORD DRAWING:
DATE:

DOKKEN ENGINEERING
110 BLUE RAVINE ROAD #200
FOLSOM, CA 95630
PHONE: (916) 858-0642
FAX: (916) 985-1845

CITY OF YUBA CITY

5TH STREET BRIDGE REPLACEMENT
CONSTRUCTION DETAILS

SHEET NO.
OF
215

8/15/2016

...\511\1858g0025.dgn

REVISION #	DATE:	DESCRIPTION AND SHEET NO.:	APPROVED BY:	DATE:

REGISTERED PROFESSIONAL ENGINEER
MEGAN R. CARTER
No. 75885
Exp. 6/30/18
CIVIL
STATE OF CALIFORNIA

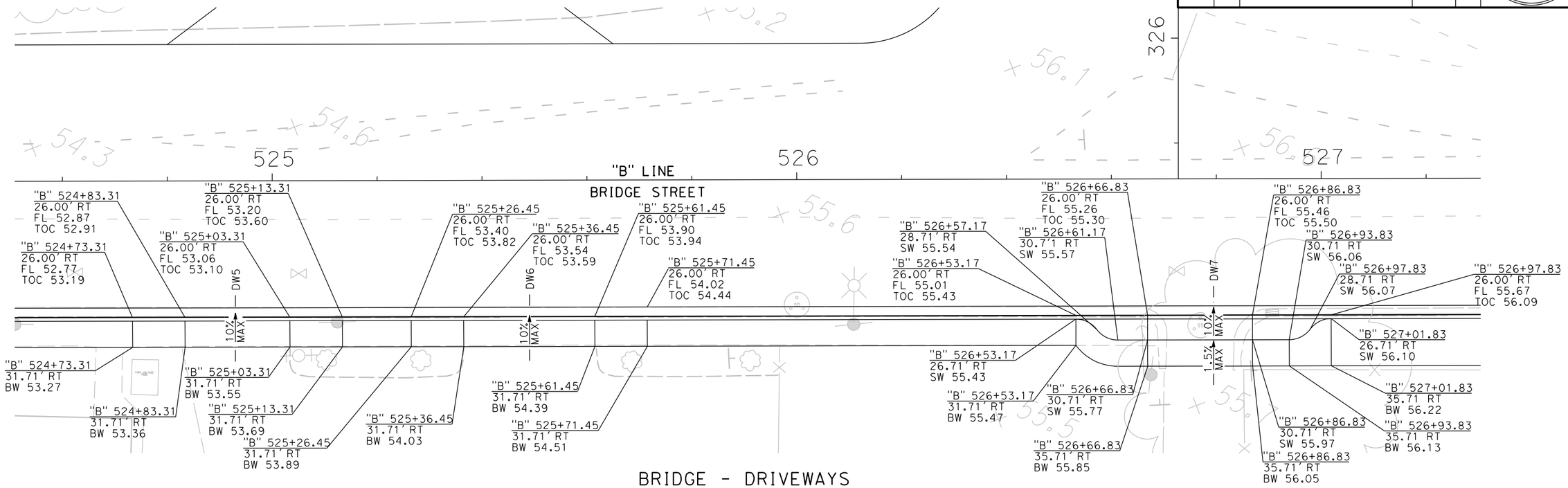

BRIDGE - DRIVEWAYS

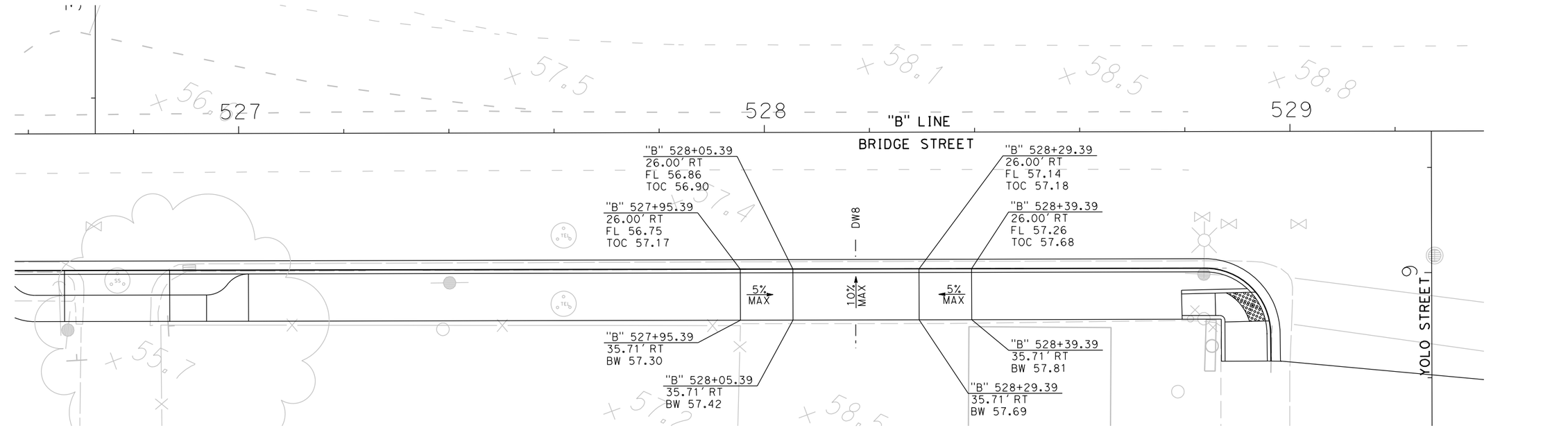

NUT TREE GAS - DRIVEWAY

FOR REDUCED PLANS
ORIGINAL SCALE IS IN INCHES
0 1 2 3
ALL DIMENSIONS SHOWN IN FEET
UNLESS OTHERWISE NOTED

DRIVEWAY DETAILS

C-26

PLAN SCALE: 1"=10'
PROFILE SCALE:
HORIZ:
VERT:

CONTRACT NO: 17-XX
DESIGNED: M. CARTER
DRAWN: A. LEE
CHECKED:
RECORD DRAWING:
DATE:

DOKKEN ENGINEERING
110 BLUE RAVINE ROAD #200
FOLSOM, CA 95630
PHONE: (916) 858-0642
FAX: (916) 985-1845

CITY OF YUBA CITY

5TH STREET BRIDGE REPLACEMENT
CONSTRUCTION DETAILS

SHEET NO.
OF
215

8/15/2016

...\511\1858ga026.dgn

REVISION #	DATE:	DESCRIPTION AND SHEET NO.:	APPROVED BY:	DATE:

REGISTERED PROFESSIONAL ENGINEER
MEGAN R. CARTER
No. 75885
Exp. 6/30/18
CIVIL
STATE OF CALIFORNIA

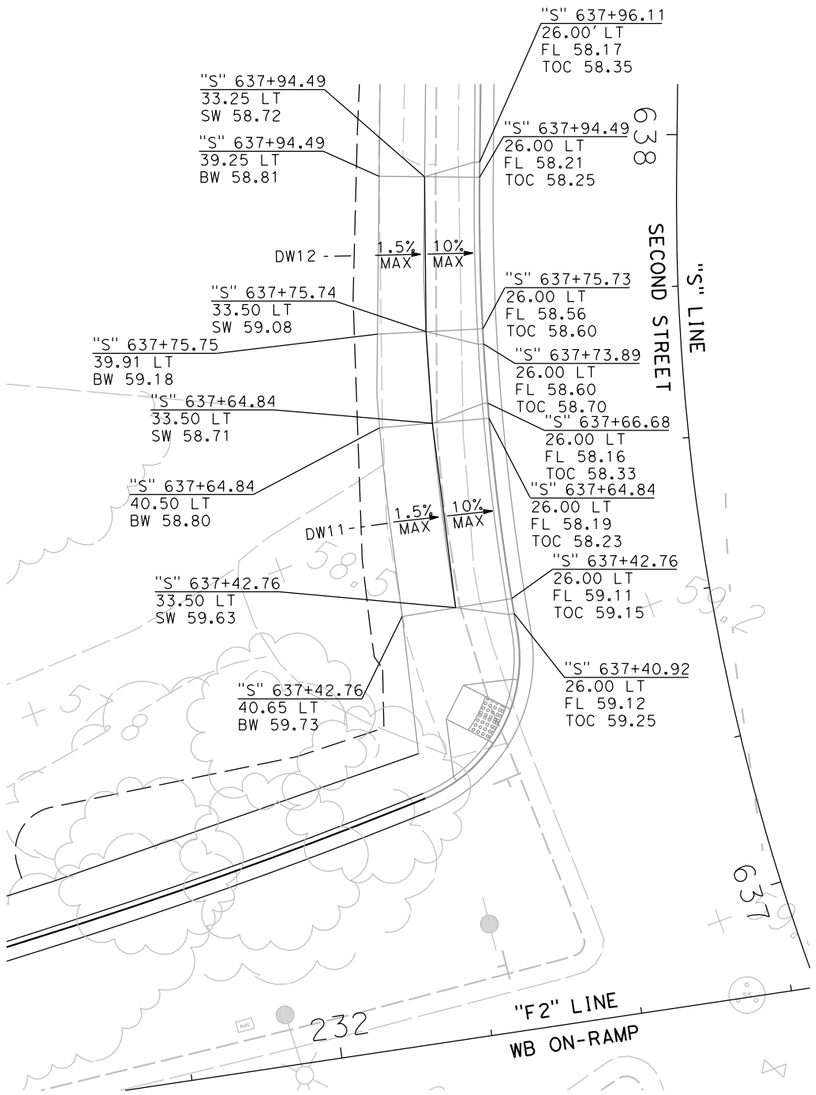

SUTTER - COPELAND

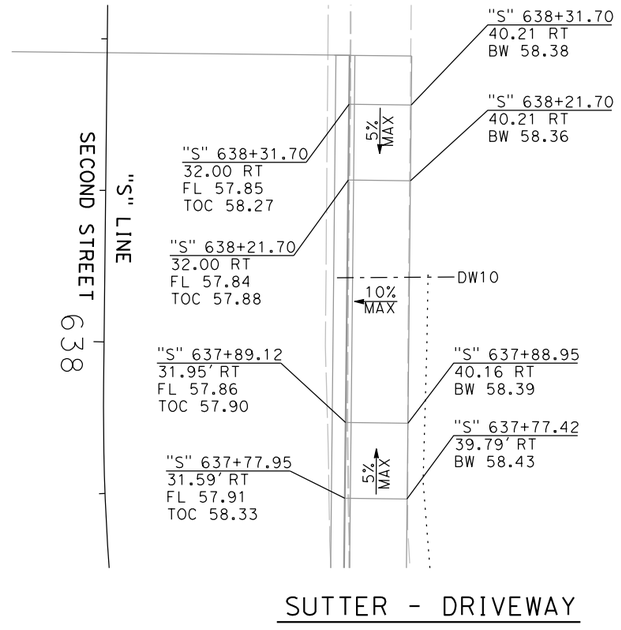

SUTTER - DRIVEWAY

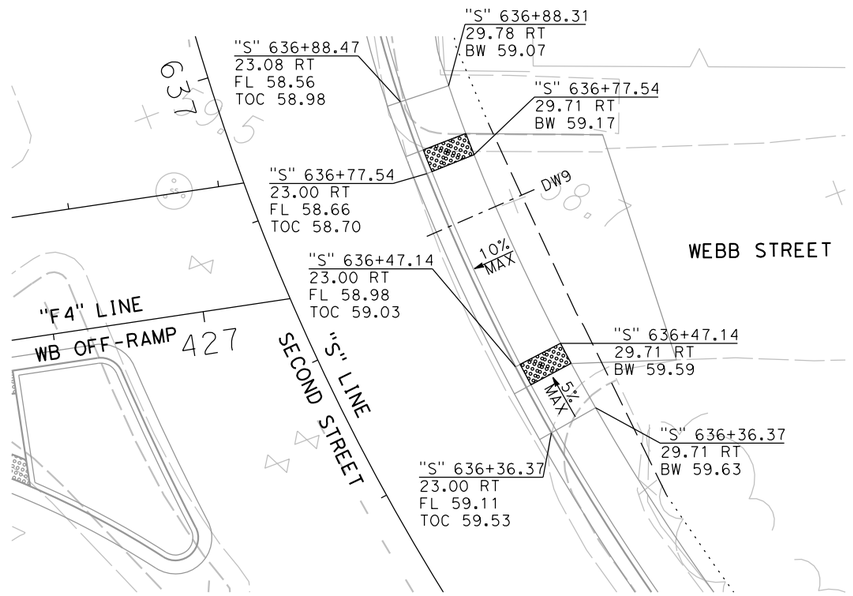

SUTTER - VACANT

DRIVEWAY DETAILS

C-27

FOR REDUCED PLANS
ORIGINAL SCALE IS IN INCHES
0 1 2 3
ALL DIMENSIONS SHOWN IN FEET
UNLESS OTHERWISE NOTED

PLAN SCALE: 1"=10'
PROFILE SCALE:
HORIZ:
VERT:

CONTRACT NO: 17-XX
DESIGNED: M. CARTER
DRAWN: A. LEE
CHECKED:
RECORD DRAWING:
DATE:

DOKKEN ENGINEERING
110 BLUE RAVINE ROAD #200
FOLSOM, CA 95630
PHONE: (916) 858-0642
FAX: (916) 985-1845

CITY OF YUBA CITY

5TH STREET BRIDGE REPLACEMENT
CONSTRUCTION DETAILS

SHEET NO.
OF
215

8/15/2016

...\511\1858ga027.dgn

REVISION #	DATE:	DESCRIPTION AND SHEET NO.:	APPROVED BY:	DATE:

REGISTERED PROFESSIONAL ENGINEER
MEGAN R. CARTER
No. 75885
Exp. 6/30/18
CIVIL
STATE OF CALIFORNIA

PLAN SCALE: 1"=10'
PROFILE SCALE:
HORIZ:
VERT:

CONTRACT NO: 17-XX
DESIGNED: M. CARTER
DRAWN: A. LEE
CHECKED:
RECORD DRAWING:
DATE:

DOKKEN ENGINEERING
110 BLUE RAVINE ROAD #200
FOLSOM, CA 95630
PHONE: (916) 858-0642
FAX: (916) 858-0643

CITY OF YUBA CITY

5TH STREET BRIDGE REPLACEMENT
CONSTRUCTION DETAILS

SHEET NO.
OF
215

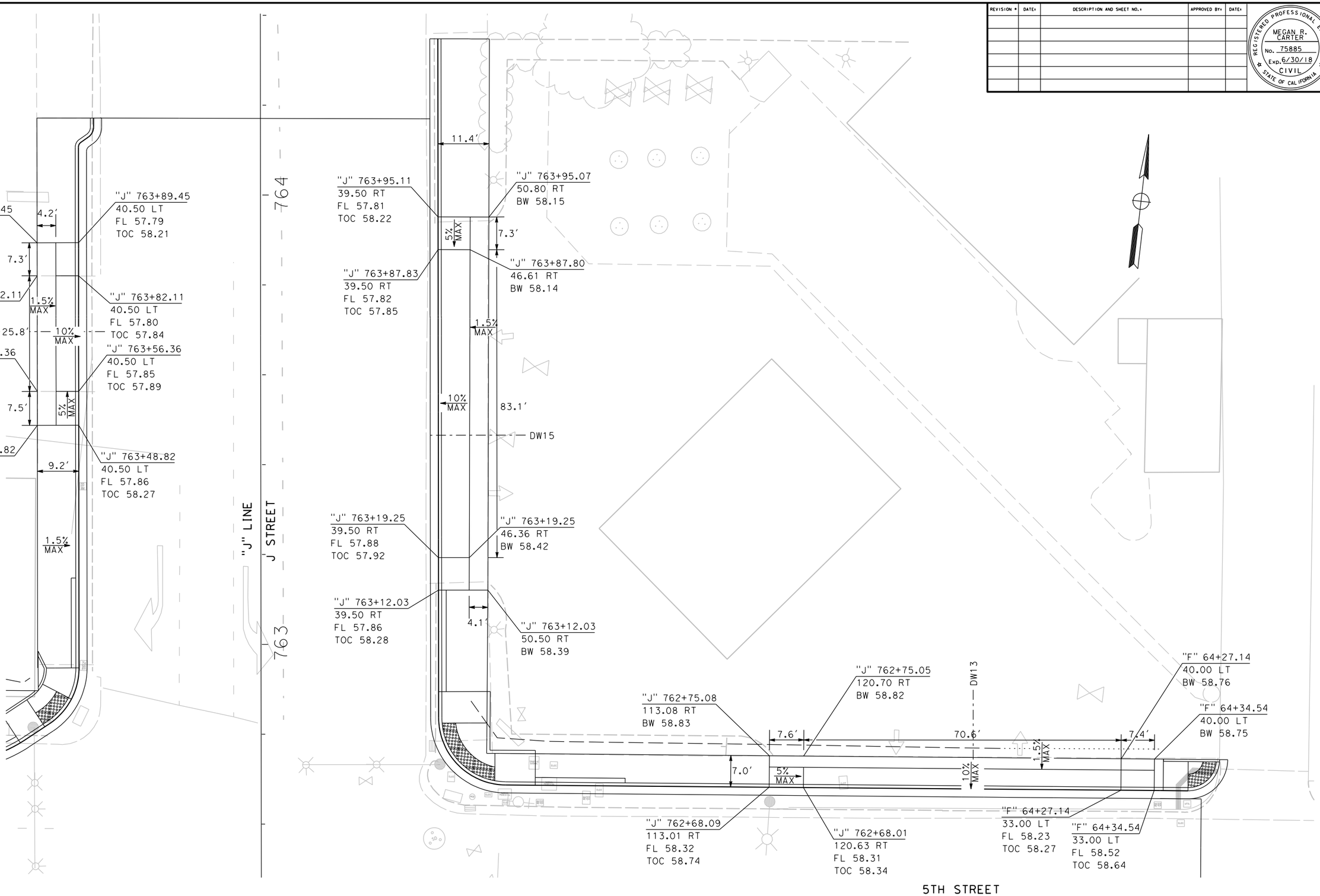

J STREET - DRIVEWAY

DRIVEWAY DETAILS

C-28

FOR REDUCED PLANS
ORIGINAL SCALE IS IN INCHES
0 1 2 3
ALL DIMENSIONS SHOWN IN FEET
UNLESS OTHERWISE NOTED

8/15/2016

...\511\1858ga028.dgn

REVISION #	DATE:	DESCRIPTION AND SHEET NO.:	APPROVED BY:	DATE:

REGISTERED PROFESSIONAL ENGINEER
MEGAN R. CARTER
No. 75885
Exp. 6/30/18
CIVIL
STATE OF CALIFORNIA

PLAN SCALE: 1"=40'
PROFILE SCALE:
HORIZ:
VERT:

CONTRACT NO: 17-XX
DESIGNED: M. CARTER
DRAWN: A. LEE
CHECKED:
RECORD DRAWING:
DATE:

DOKKEN ENGINEERING
110 BLUE RAVINE ROAD #200
FOLSOM, CA 95630
PHONE: (916) 858-0642
FAX: (916) 858-0943

CITY OF YUBA CITY

5TH STREET BRIDGE REPLACEMENT
TEMPORARY WATER POLLUTION CONTROL PLAN

SHEET NO.
OF
215

LEGEND:

- TEMPORARY FIBER ROLL
- TEMPORARY DRAINAGE INLET PROTECTION
- TEMPORARY CONSTRUCTION ENTRANCE
- TEMPORARY HYDROSEED

TEMPORARY WATER POLLUTION CONTROL SHEETS FOR RESIDENT ENGINEER'S BINDER ONLY

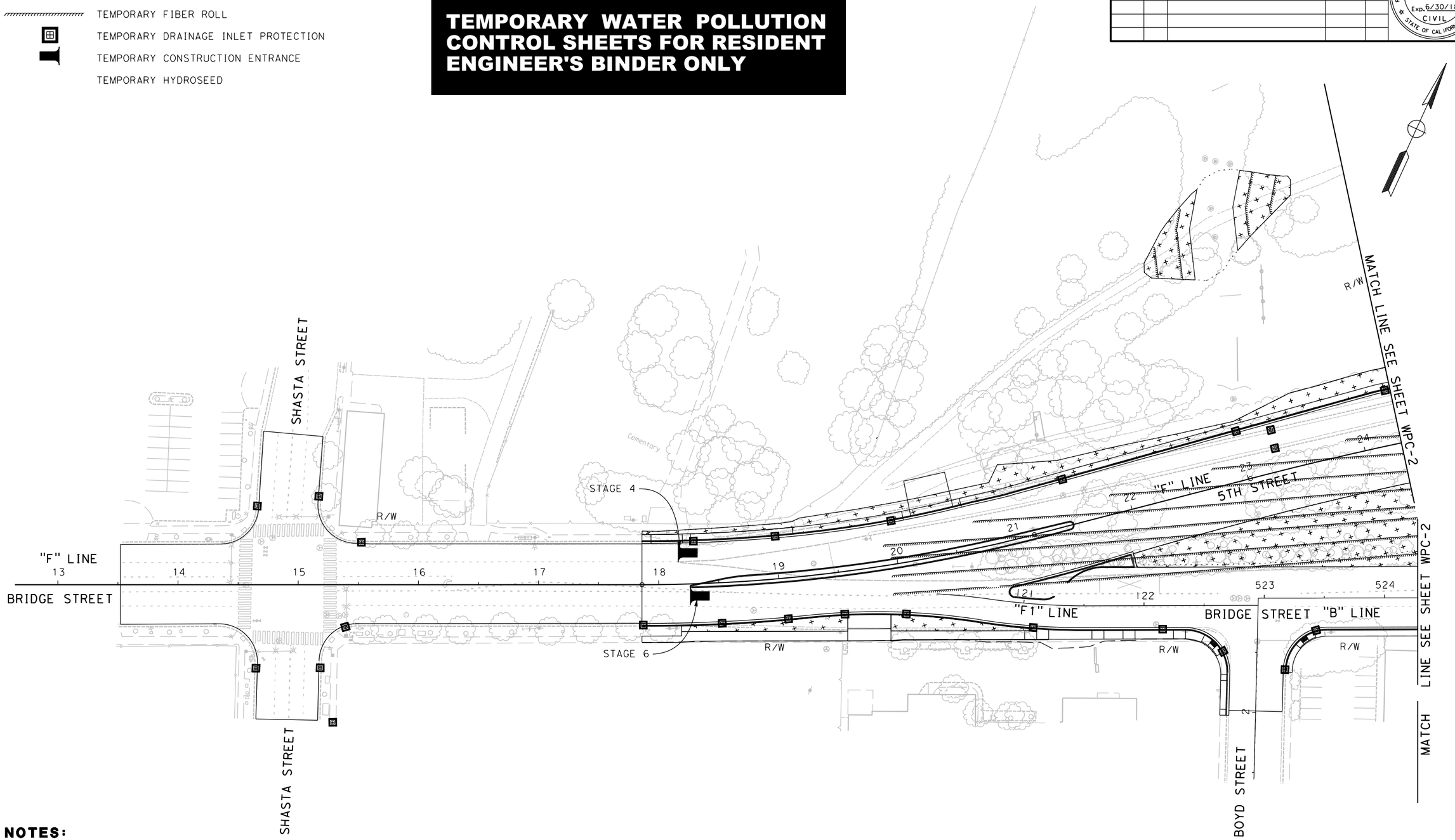

NOTES:

1. TEMPORARY CONSTRUCTION ENTRANCE TO BE IN USE DURING NOTED STAGES

FOR REDUCED PLANS ORIGINAL SCALE IS IN INCHES 0 1 2 3

ALL DIMENSIONS SHOWN IN FEET UNLESS OTHERWISE NOTED

WPC-1

8/15/2016

...\511\1858gp001.dgn

TEMPORARY WATER POLLUTION CONTROL SHEETS FOR RESIDENT ENGINEER'S BINDER ONLY

REVISION #	DATE:	DESCRIPTION AND SHEET NO.:	APPROVED BY:	DATE:

REGISTERED PROFESSIONAL ENGINEER
MEGAN R. CARTER
No. 75885
Exp. 6/30/18
CIVIL
STATE OF CALIFORNIA

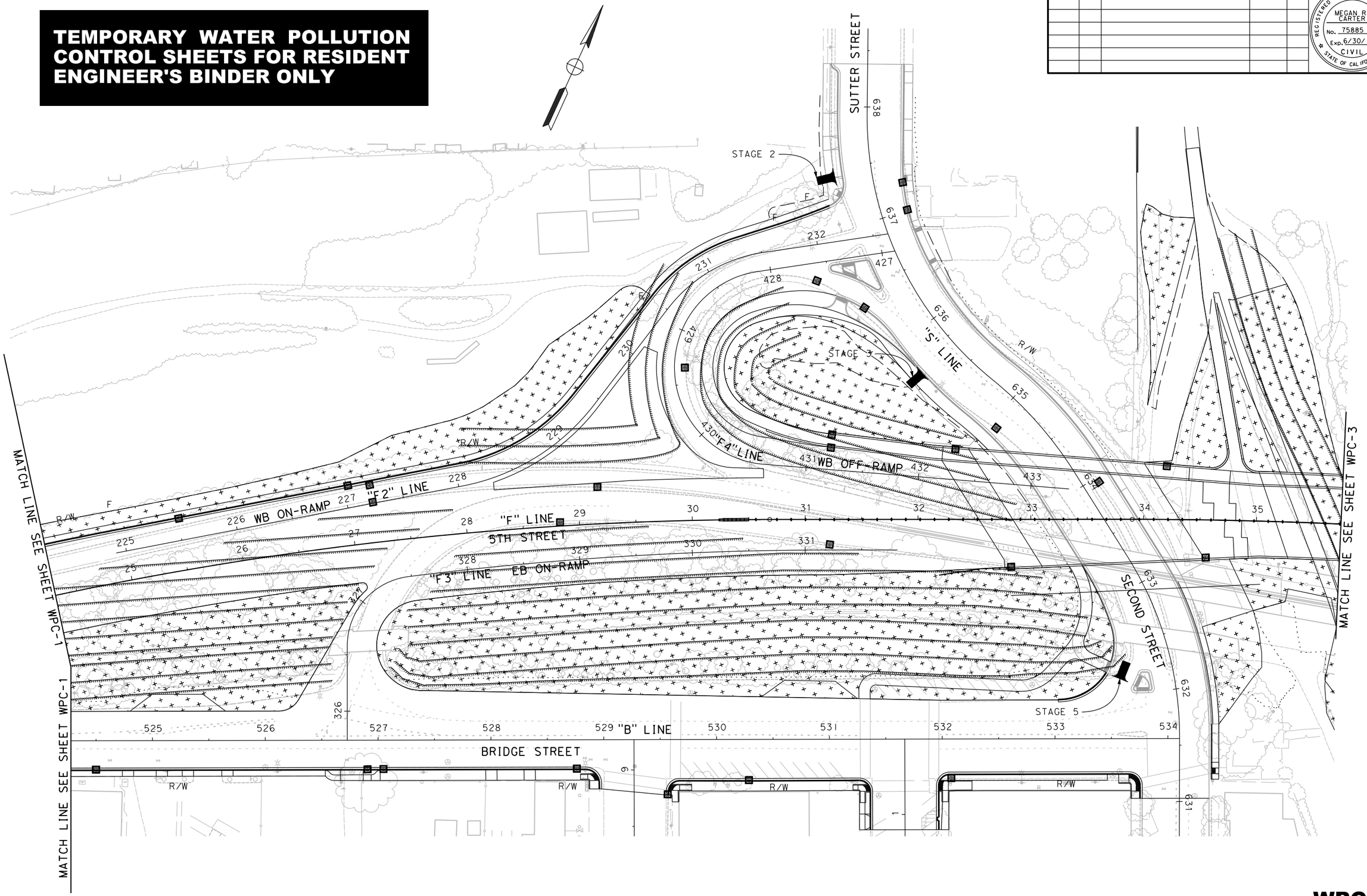

WPC-2

FOR REDUCED PLANS
ORIGINAL SCALE IS IN INCHES

0 1 2 3

ALL DIMENSIONS SHOWN IN FEET
UNLESS OTHERWISE NOTED

8/15/2016

...\511\1858gb002.dgn

PLAN SCALE: 1"=40'
PROFILE SCALE:
HORIZ:
VERT:

CONTRACT NO: 17-XX
DESIGNED: M. CARTER
DRAWN: A. LEE
CHECKED:
RECORD DRAWING: DATE:

DOKKEN ENGINEERING
110 BLUE RAVINE ROAD #200
FOLSOM, CA 95630
PHONE: (916) 858-0642
FAX: (916) 858-0643

CITY OF YUBA CITY

5TH STREET BRIDGE REPLACEMENT
TEMPORARY WATER POLLUTION CONTROL PLAN

SHEET NO.
OF
215

REVISION #	DATE:	DESCRIPTION AND SHEET NO.:	APPROVED BY:	DATE:

REGISTERED PROFESSIONAL ENGINEER
MEGAN R. CARTER
No. 75885
Exp. 6/30/18
CIVIL
STATE OF CALIFORNIA

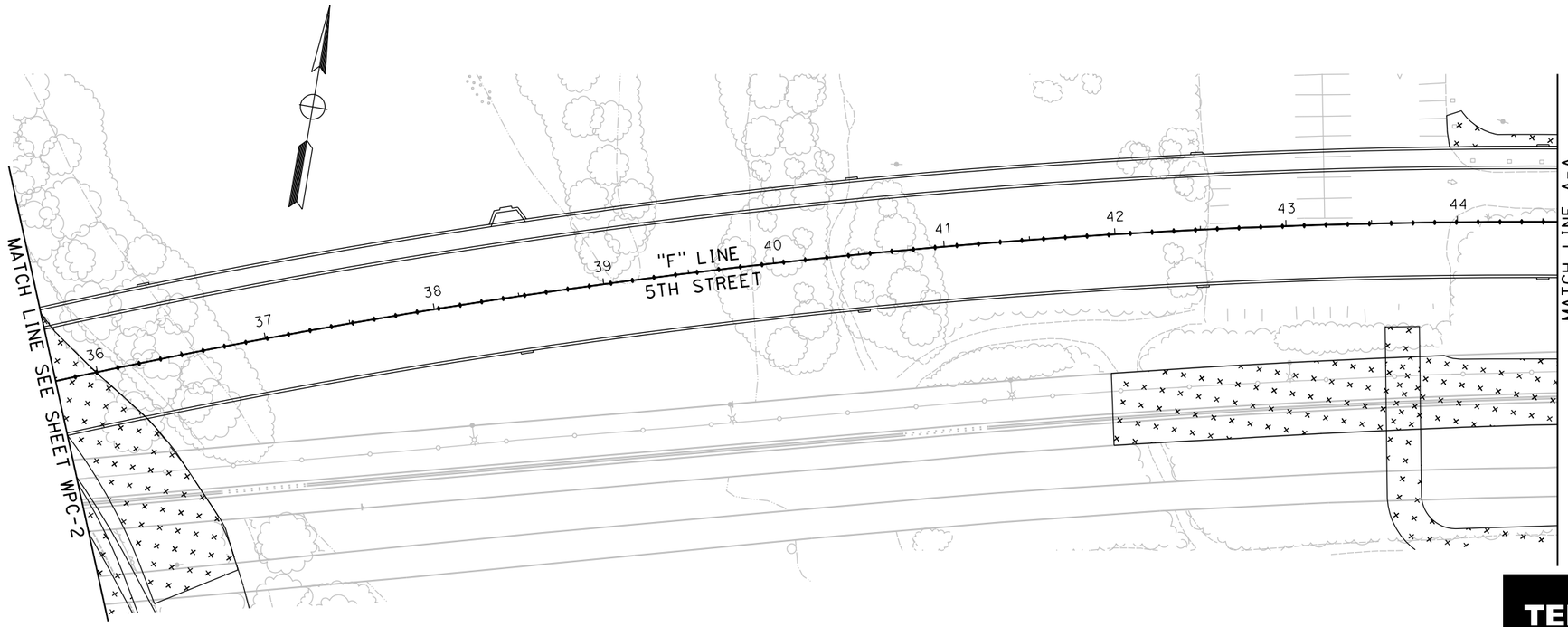

TEMPORARY WATER POLLUTION CONTROL SHEETS FOR RESIDENT ENGINEER'S BINDER ONLY

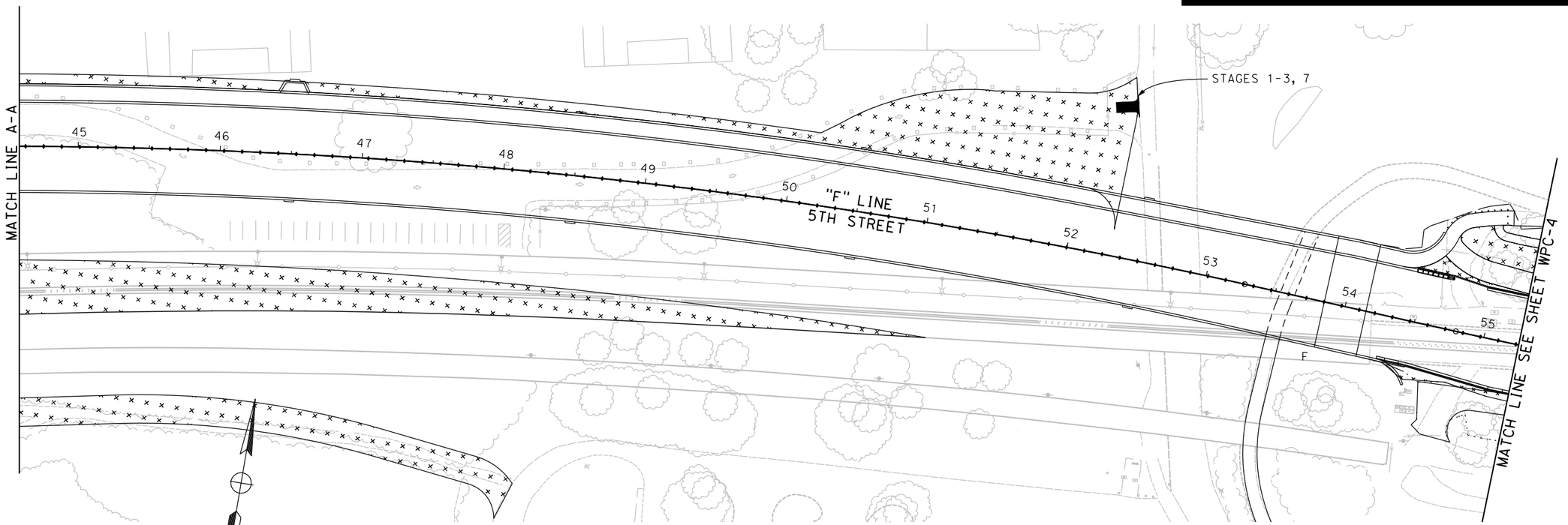

FOR REDUCED PLANS
ORIGINAL SCALE IS IN INCHES

0 1 2 3

ALL DIMENSIONS SHOWN IN FEET
UNLESS OTHERWISE NOTED

WPC-3

PLAN SCALE: 1"=40'
PROFILE SCALE:
HORIZ:
VERT:

CONTRACT NO: 17-XX
DESIGNED: M. CARTER
DRAWN: A. LEE
CHECKED:
RECORD DRAWING: DATE:

DOKKEN ENGINEERING
110 BLUE RAVINE ROAD #200
FOLSOM, CA 95630
PHONE: (916) 858-0642
FAX: (916) 985-1845

CITY OF YUBA CITY

5TH STREET BRIDGE REPLACEMENT
TEMPORARY WATER POLLUTION CONTROL PLAN

SHEET NO.
OF
215

8/15/2016

...\511\1858gp003.dgn

TEMPORARY WATER POLLUTION CONTROL SHEETS FOR RESIDENT ENGINEER'S BINDER ONLY

REVISION #	DATE:	DESCRIPTION AND SHEET NO.:	APPROVED BY:	DATE:

REGISTERED PROFESSIONAL ENGINEER
MEGAN R. CARTER
No. 75885
Exp. 6/30/18
CIVIL
STATE OF CALIFORNIA

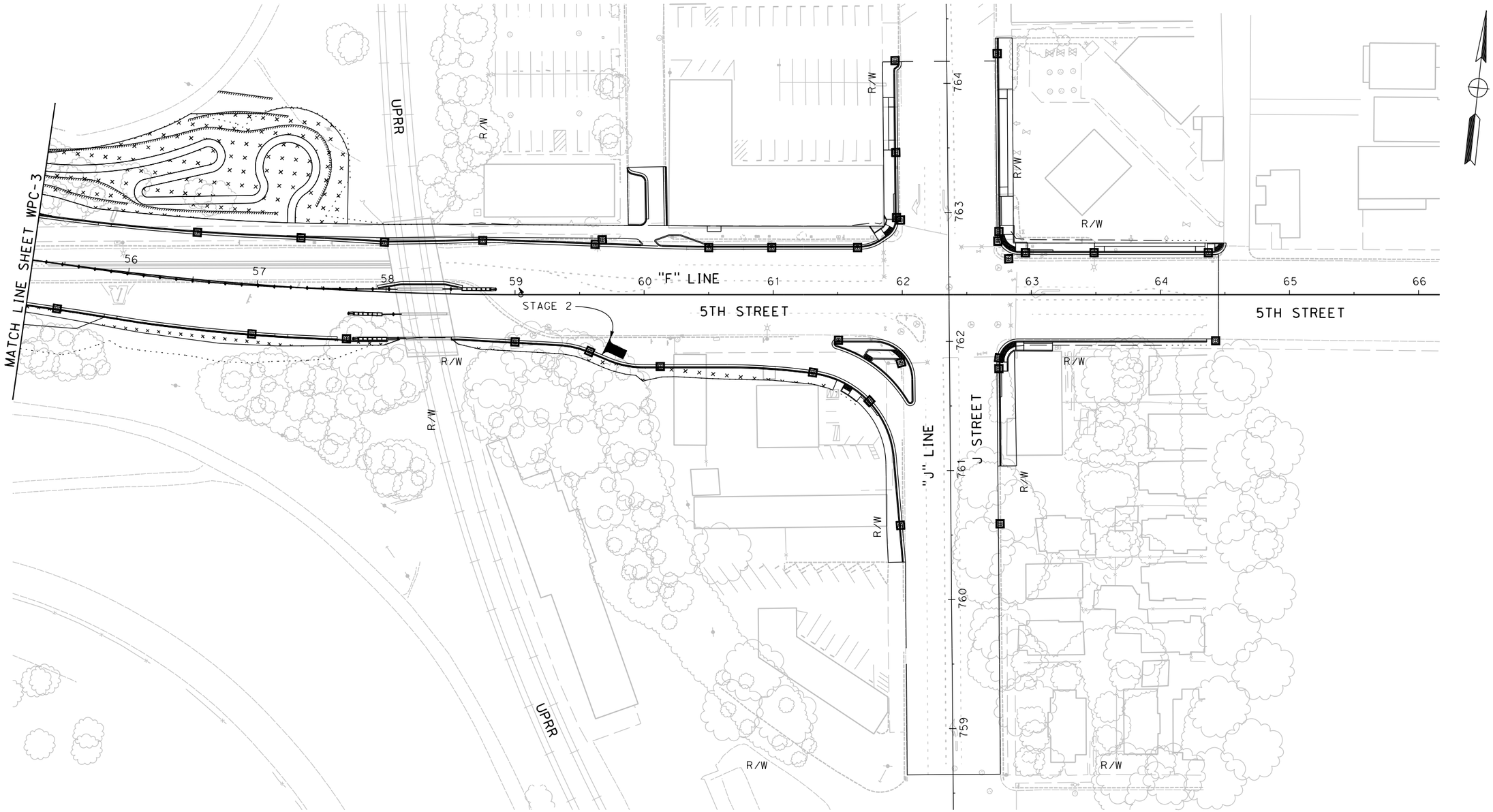

FOR REDUCED PLANS
ORIGINAL SCALE IS IN INCHES
0 1 2 3
ALL DIMENSIONS SHOWN IN FEET
UNLESS OTHERWISE NOTED

PLAN SCALE: 1"=40'
PROFILE SCALE:
HORIZ:
VERT:

CONTRACT NO: 17-XX
DESIGNED: M. CARTER
DRAWN: A. LEE
CHECKED:
RECORD DRAWING: DATE:

DOKKEN ENGINEERING
110 BLUE RAVINE ROAD #200
FOLSOM, CA 95630
PHONE: (916) 858-0642
FAX: (916) 985-1845

CITY OF YUBA CITY

5TH STREET BRIDGE REPLACEMENT
TEMPORARY WATER POLLUTION CONTROL PLAN

SHEET NO.
OF
215

WPC-4

8/15/2016

...\511\1858gb004.dgn

REVISION #	DATE:	DESCRIPTION AND SHEET NO.:	APPROVED BY:	DATE:

REGISTERED PROFESSIONAL ENGINEER
MEGAN R. CARTER
No. 75885
Exp. 6/30/18
CIVIL
STATE OF CALIFORNIA

NOTES:

1. FOR HYDROSEED MIX, SEE ESA-1 SHEET.

LEGEND

- EROSION CONTROL, HYDROSEED
- C, CUT
- F, EMBANKMENT
- FIBER ROLL

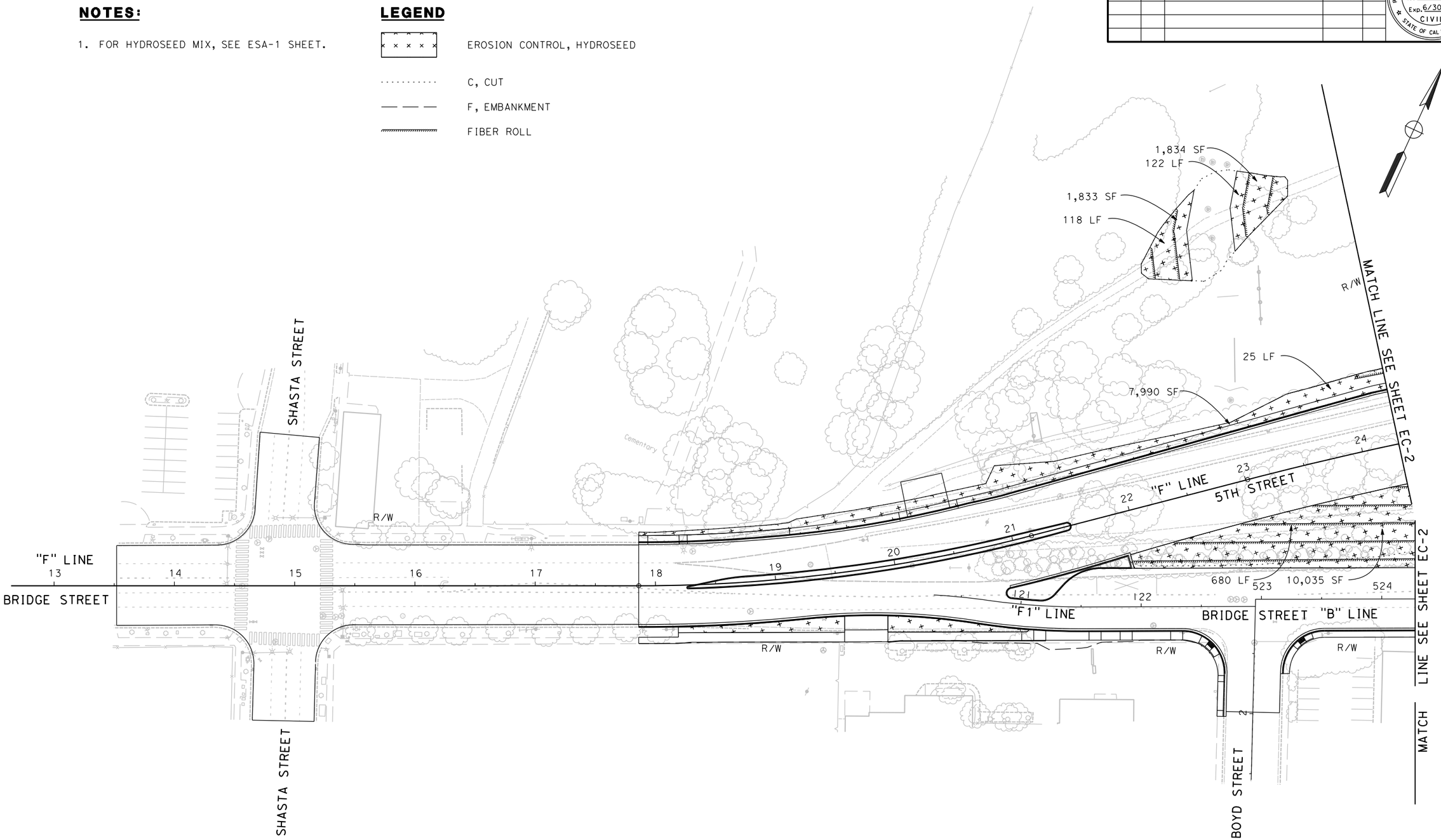

FOR REDUCED PLANS
ORIGINAL SCALE IS IN INCHES

0 1 2 3

ALL DIMENSIONS SHOWN IN FEET
UNLESS OTHERWISE NOTED

PLAN SCALE: 1"=40'
PROFILE SCALE:
HORIZ:
VERT:

CONTRACT NO: 17-XX
DESIGNED: M. CARTER
DRAWN: A. LEE
CHECKED:
RECORD DRAWING:
DATE:

DOKKEN ENGINEERING
110 BLUE RAVINE ROAD #200
FOLSOM, CA 95630
PHONE: (916) 858-0642
FAX: (916) 858-0943

CITY OF YUBA CITY

5TH STREET BRIDGE REPLACEMENT
EROSION CONTROL PLAN

SHEET NO.
EC-1
OF
215

8/15/2016

...\511\1858ge001.dgn

REVISION #	DATE	DESCRIPTION AND SHEET NO.	APPROVED BY	DATE

REGISTERED PROFESSIONAL ENGINEER
MEGAN R. CARTER
No. 75885
Exp. 6/30/18
CIVIL
STATE OF CALIFORNIA

PLAN SCALE: 1"=40'
PROFILE SCALE:
HORIZ:
VERT:

CONTRACT NO: 17-XX
DESIGNED: M. CARTER
DRAWN: A. LEE
CHECKED:
RECORD DRAWING: DATE:

DOKKEN ENGINEERING
110 BLUE RAVINE ROAD #200
FOLSOM, CA 95630
PHONE: (916) 858-0642
FAX: (916) 858-0643

CITY OF
YUBA CITY

5TH STREET BRIDGE REPLACEMENT

EROSION CONTROL PLAN

SHEET NO.
EC-2
OF
215

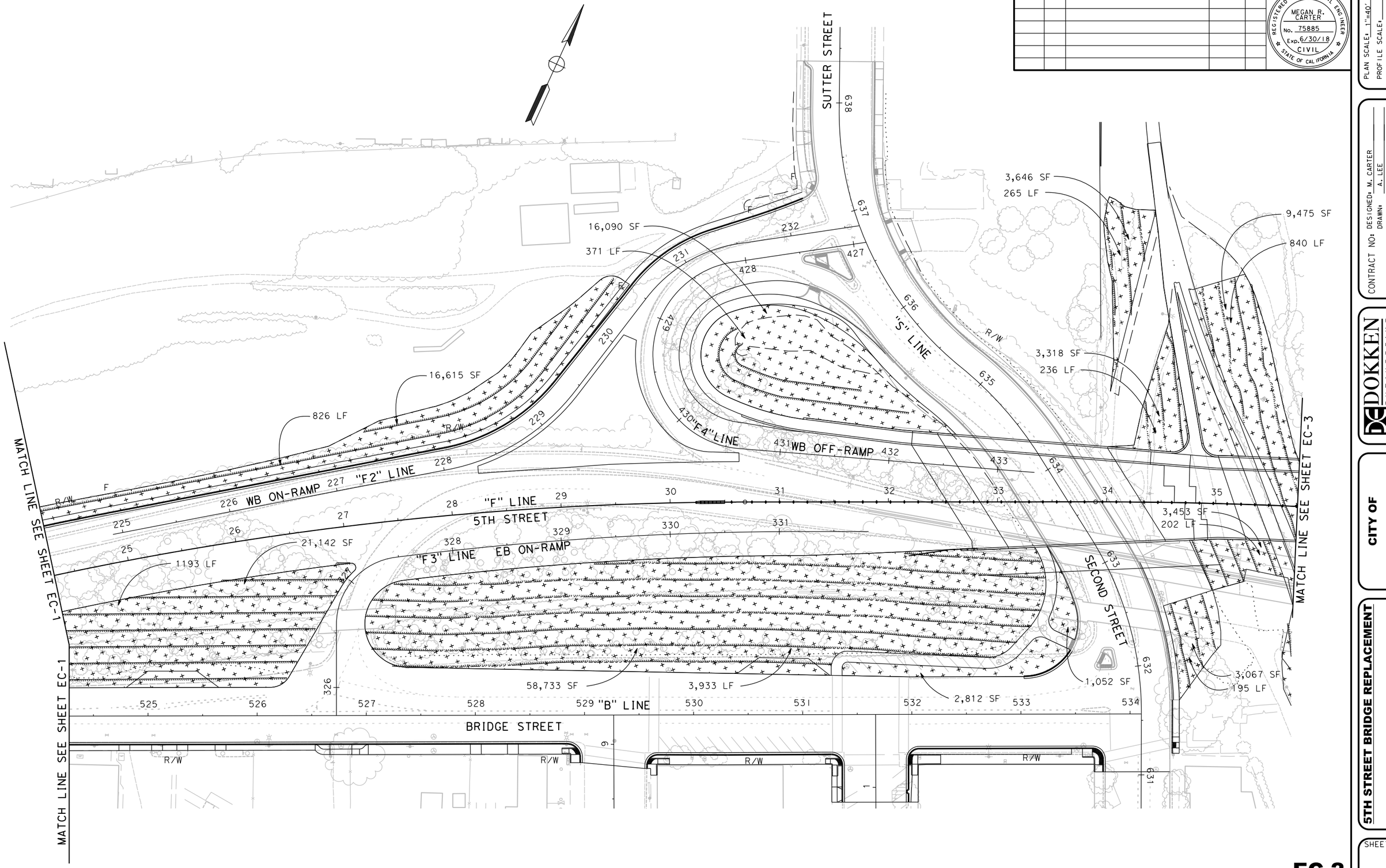

FOR REDUCED PLANS
ORIGINAL SCALE IS IN INCHES
0 1 2 3
ALL DIMENSIONS SHOWN IN FEET
UNLESS OTHERWISE NOTED

8/15/2016
...\511\1858ge002.dgn

REVISION #	DATE:	DESCRIPTION AND SHEET NO.:	APPROVED BY:	DATE:

REGISTERED PROFESSIONAL ENGINEER
MEGAN R. CARTER
No. 75885
Exp. 6/30/18
CIVIL
STATE OF CALIFORNIA

PLAN SCALE: 1"=40'
PROFILE SCALE:
HORIZ:
VERT:

CONTRACT NO: 17-XX
DESIGNED: M. CARTER
DRAWN: A. LEE
CHECKED:
RECORD DRAWING: DATE:

DOKKEN ENGINEERING
110 BLUE RAVINE ROAD #200
FOLSOM, CA 95630
PHONE: (916) 858-0642
FAX: (916) 858-0643

CITY OF YUBA CITY

5TH STREET BRIDGE REPLACEMENT
EROSION CONTROL PLAN

SHEET NO.
OF
215

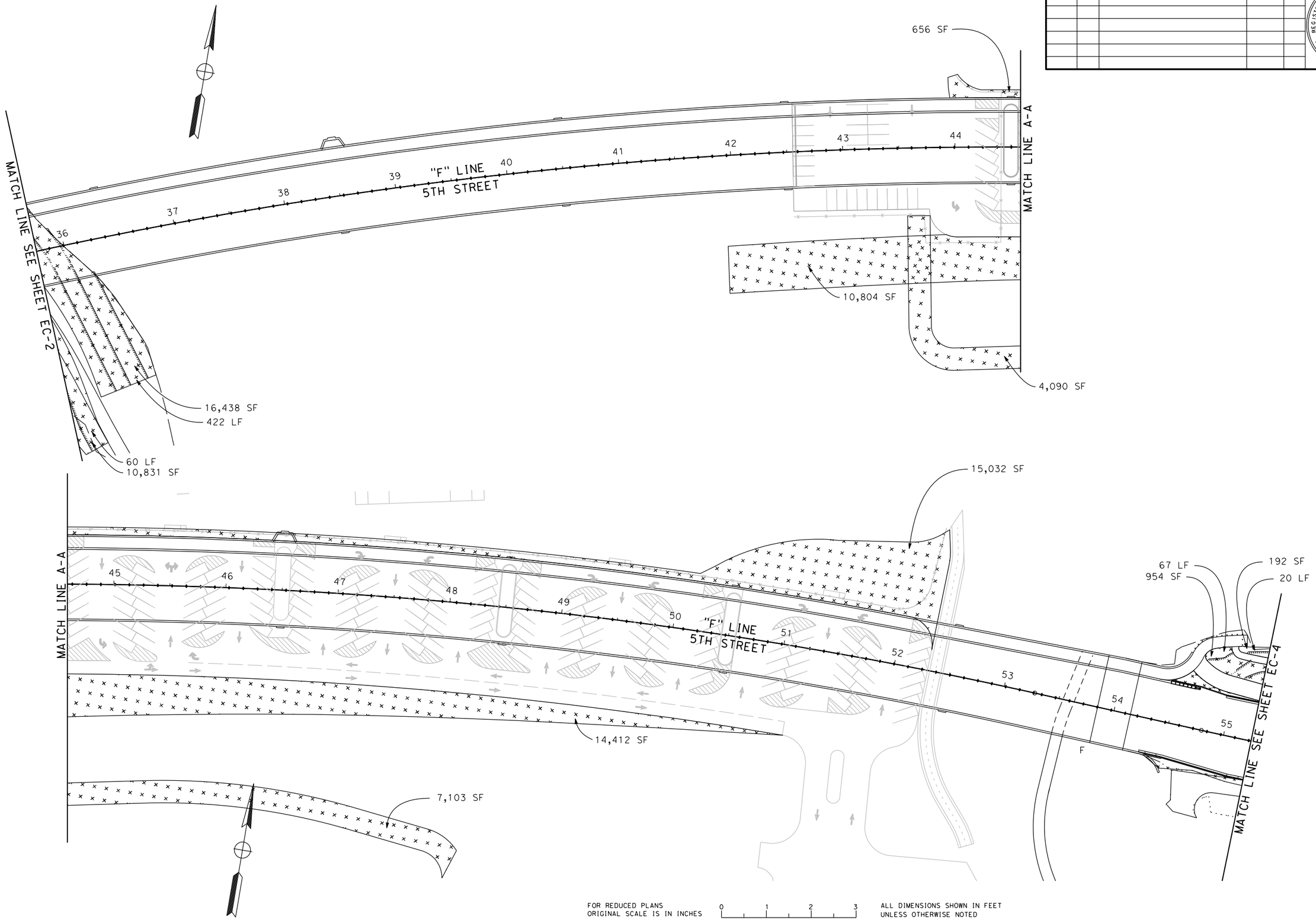

EC-3

FOR REDUCED PLANS
ORIGINAL SCALE IS IN INCHES
0 1 2 3
ALL DIMENSIONS SHOWN IN FEET
UNLESS OTHERWISE NOTED

8/15/2016

...\511\1858ge003.dgn

REVISION #	DATE:	DESCRIPTION AND SHEET NO.:	APPROVED BY:	DATE:

REGISTERED PROFESSIONAL ENGINEER
MEGAN R. CARTER
No. 75885
Exp. 6/30/18
CIVIL
STATE OF CALIFORNIA

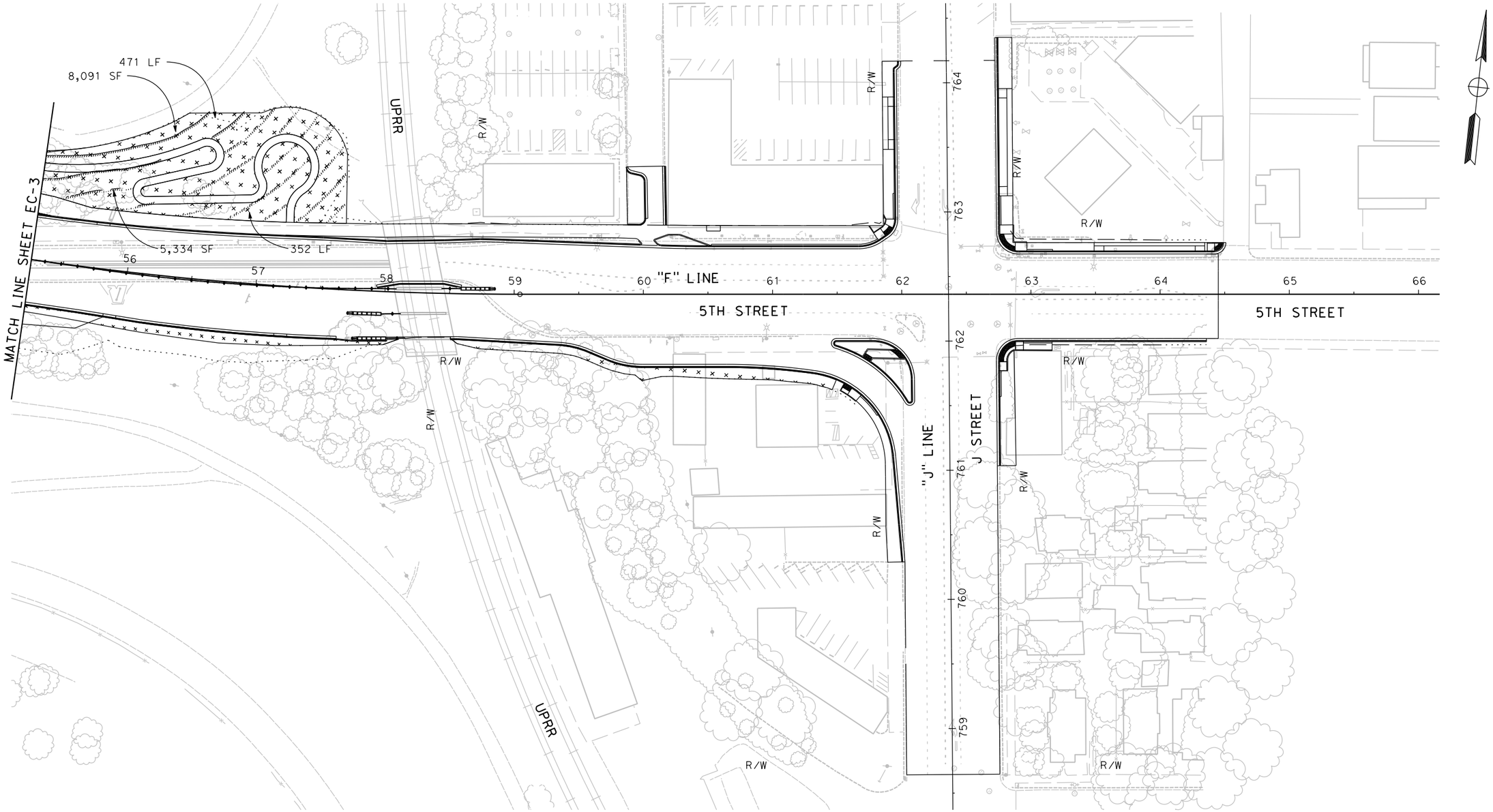

FOR REDUCED PLANS
ORIGINAL SCALE IS IN INCHES

0 1 2 3

ALL DIMENSIONS SHOWN IN FEET
UNLESS OTHERWISE NOTED

PLAN SCALE: 1"=40'
PROFILE SCALE:
HORIZ:
VERT:

CONTRACT NO: 17-XX
DESIGNED: M. CARTER
DRAWN: A. LEE
CHECKED:
RECORD DRAWING:
DATE:

DOKKEN ENGINEERING
110 BLUE RAVINE ROAD #200
FOLSOM, CA 95630
PHONE: (916) 858-0642
FAX: (916) 985-1845

CITY OF
YUBA CITY

5TH STREET BRIDGE REPLACEMENT
EROSION CONTROL PLAN

SHEET NO.
OF
215

EC-4

8/15/2016

...\511\1858ge004.dgn

REVISION #	DATE:	DESCRIPTION AND SHEET NO.:	APPROVED BY:	DATE:

REGISTERED PROFESSIONAL ENGINEER
MEGAN R. CARTER
No. 75885
Exp. 6/30/18
CIVIL
STATE OF CALIFORNIA

NOTES:

1. 5' MAJOR CONTOUR INTERVAL
2. 1' MINOR CONTOUR INTERVAL

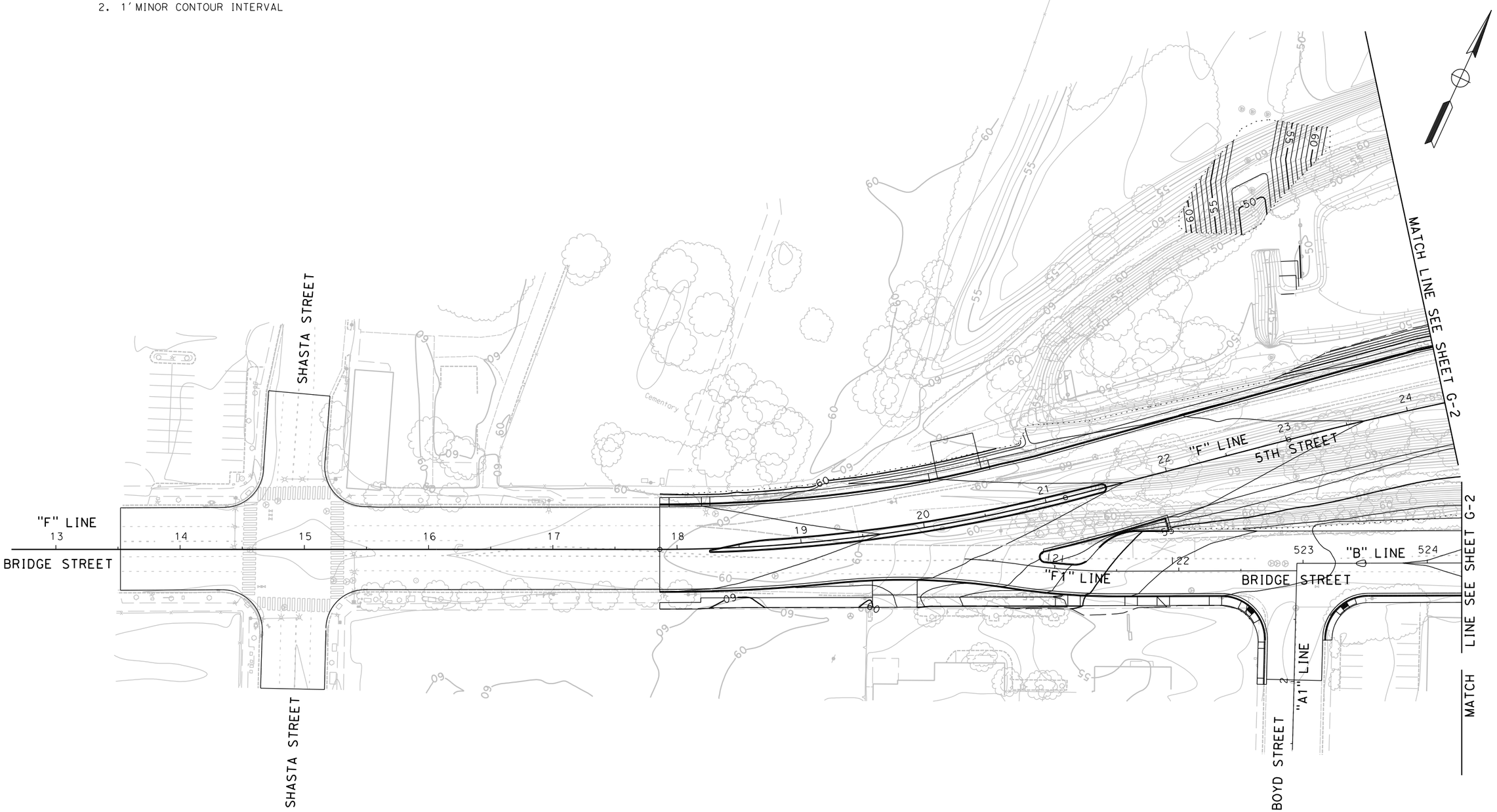

FOR REDUCED PLANS
ORIGINAL SCALE IS IN INCHES
0 1 2 3
ALL DIMENSIONS SHOWN IN FEET
UNLESS OTHERWISE NOTED

G-1

PLAN SCALE: 1"=40'
PROFILE SCALE:
HORIZ:
VERT:

CONTRACT NO: **17-XX**
DESIGNED: M. CARTER
DRAWN: A. LEE
CHECKED:
RECORD DRAWING: DATE:

DOKKEN ENGINEERING
110 BLUE RAVINE ROAD #200
FOLSOM, CA 95630
PHONE: (916) 858-0642
FAX: (916) 858-0943

CITY OF **YUBA CITY**

5TH STREET BRIDGE REPLACEMENT

CONTOUR GRADING

SHEET NO.
OF
215

8/15/2016

...\511\1858h0001.dgn

...\511\1858ha002.dgn 8/15/2016

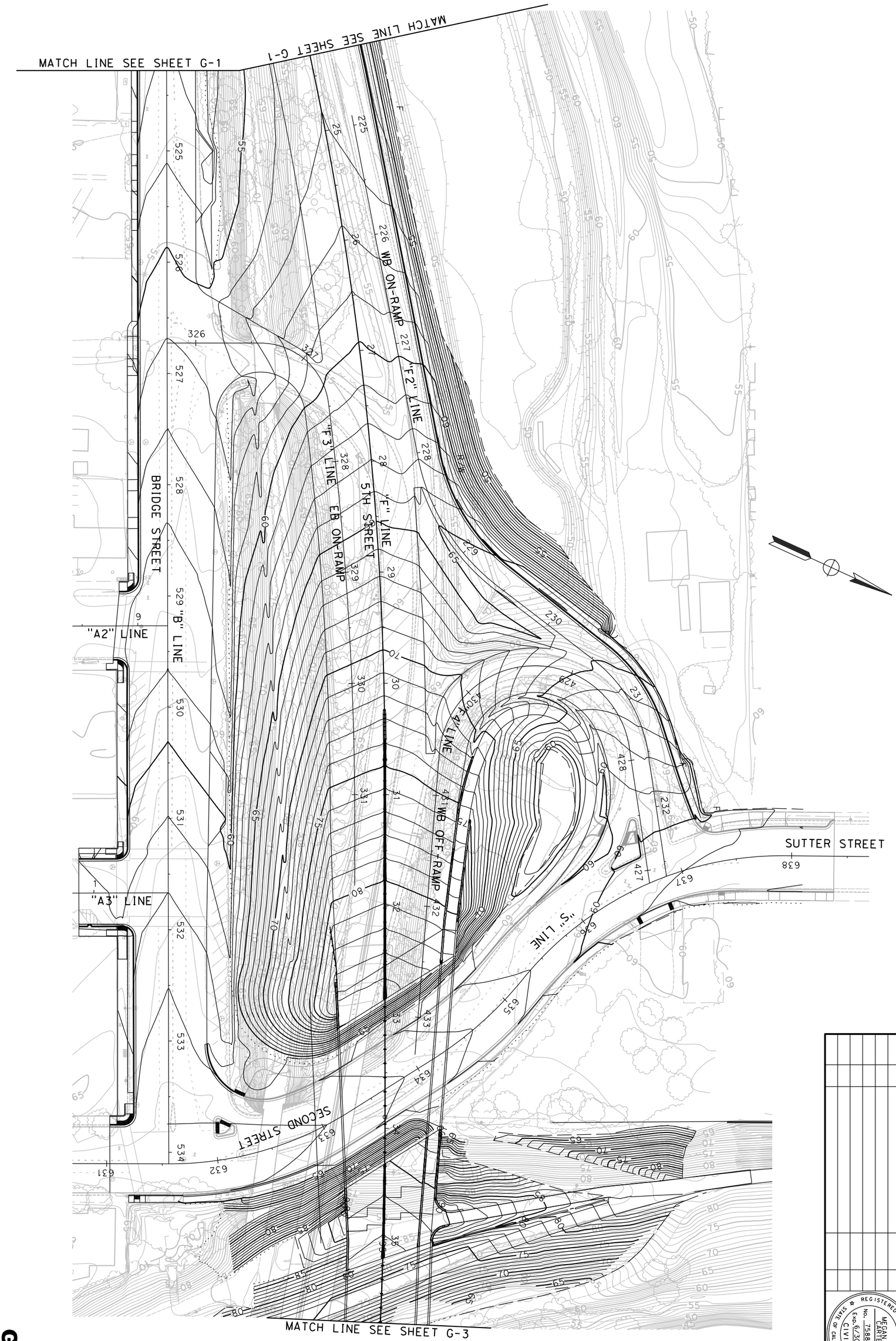

FOR REDUCED PLANS
ORIGINAL SCALE IS IN INCHES
0 1 2 3

ALL DIMENSIONS SHOWN IN FEET
UNLESS OTHERWISE NOTED

REVISION *	DATE:	DESCRIPTION AND SHEET NO.*	APPROVED BY:	DATE:

REGISTERED PROFESSIONAL ENGINEER
MEGAN R. CARTER
No. 75885
Exp. 6/30/18
CIVIL
STATE OF CALIFORNIA

G-2

SHEET NO. 215 OF

5TH STREET BRIDGE REPLACEMENT

CONTOUR GRADING

CITY OF YUBA CITY

DOKKEN ENGINEERING
110 BLUE RAVINE ROAD #200
FOLSOM, CA 95630
PHONE: (916) 858-0642
FAX: (916) 858-0643

CONTRACT NO: 17-XX

DESIGNED: M. CARTER
DRAWN: A. LEE
CHECKED:
RECORD DRAWING: DATE:

PLAN SCALE: 1"=40'
PROFILE SCALE:
HORIZ:
VERT:

REVISION #	DATE:	DESCRIPTION AND SHEET NO.:	APPROVED BY:	DATE:

REGISTERED PROFESSIONAL ENGINEER
MEGAN R. CARTER
No. 75885
Exp. 6/30/18
CIVIL
STATE OF CALIFORNIA

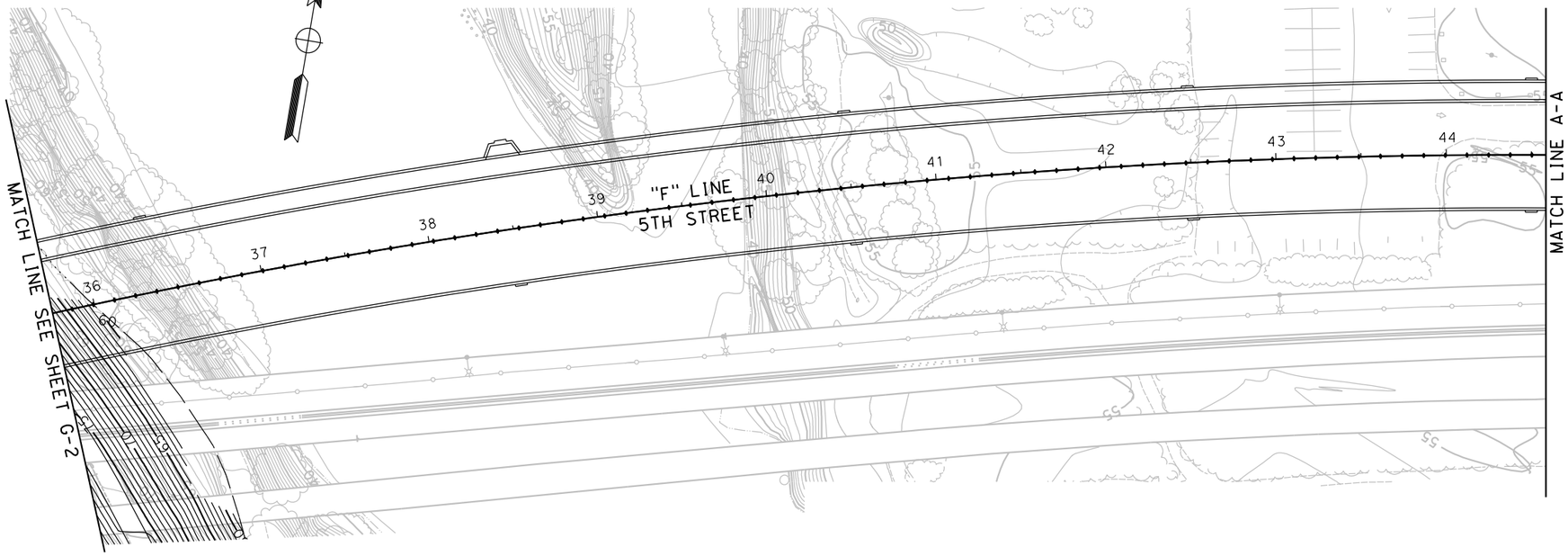

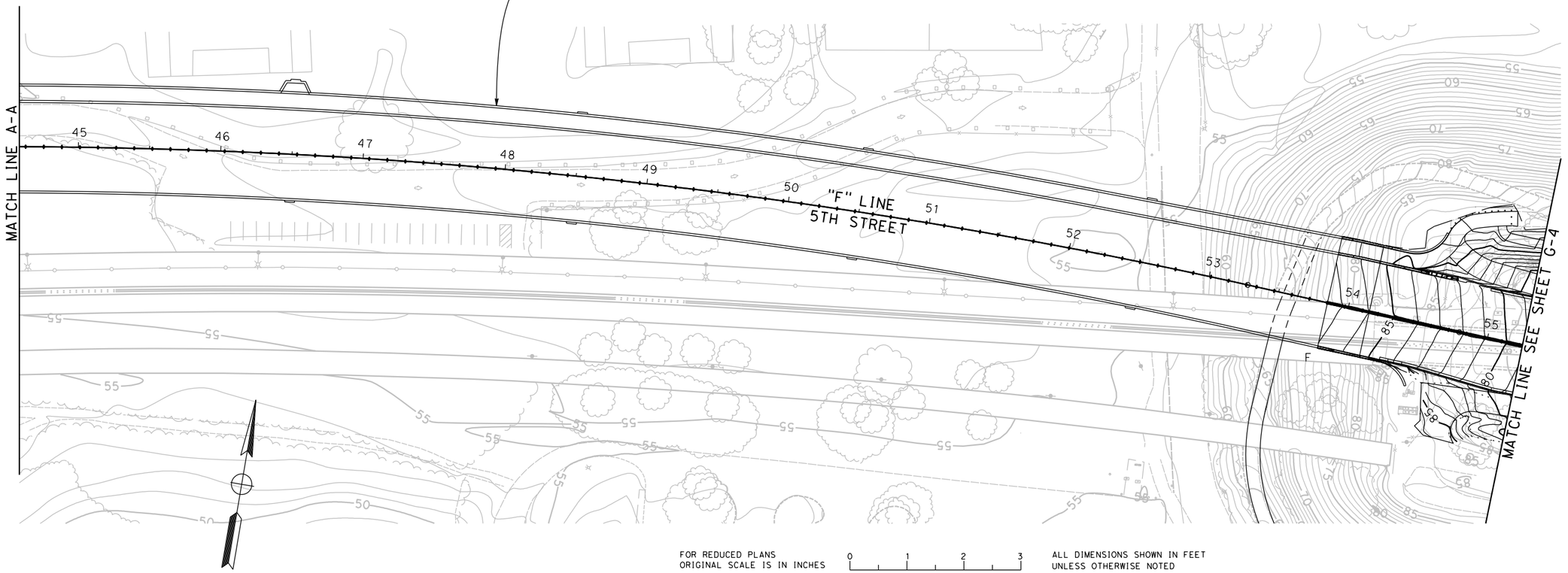

FOR REDUCED PLANS
ORIGINAL SCALE IS IN INCHES

0 1 2 3

ALL DIMENSIONS SHOWN IN FEET
UNLESS OTHERWISE NOTED

PLAN SCALE: 1"=40'
PROFILE SCALE:
HORIZ:
VERT:

CONTRACT NO: 17-XX
DESIGNED: M. CARTER
DRAWN: A. LEE
CHECKED:
RECORD DRAWING: DATE:

DOKKEN ENGINEERING
110 BLUE RAVINE ROAD #200
FOLSOM, CA 95630
PHONE: (916) 858-0642
FAX: (916) 985-1845

CITY OF YUBA CITY

5TH STREET BRIDGE REPLACEMENT

CONTOUR GRADING

SHEET NO.
OF
215

G-3

8/15/2016

...\511\1858ha003.dgn

REVISION #	DATE:	DESCRIPTION AND SHEET NO.:	APPROVED BY:	DATE:

REGISTERED PROFESSIONAL ENGINEER
MEGAN R. CARTER
No. 75885
Exp. 6/30/18
CIVIL
STATE OF CALIFORNIA

PLAN SCALE: 1"=40'
PROFILE SCALE:
HORIZ:
VERT:

CONTRACT NO: 17-XX
DESIGNED: M. CARTER
DRAWN: A. LEE
CHECKED:
RECORD DRAWING:
DATE:

DOKKEN ENGINEERING
110 BLUE RAVINE ROAD #200
FOLSOM, CA 95630
PHONE: (916) 858-0642
FAX: (916) 985-1845

CITY OF YUBA CITY

5TH STREET BRIDGE REPLACEMENT

CONTOUR GRADING

SHEET NO.
G-4
OF
215

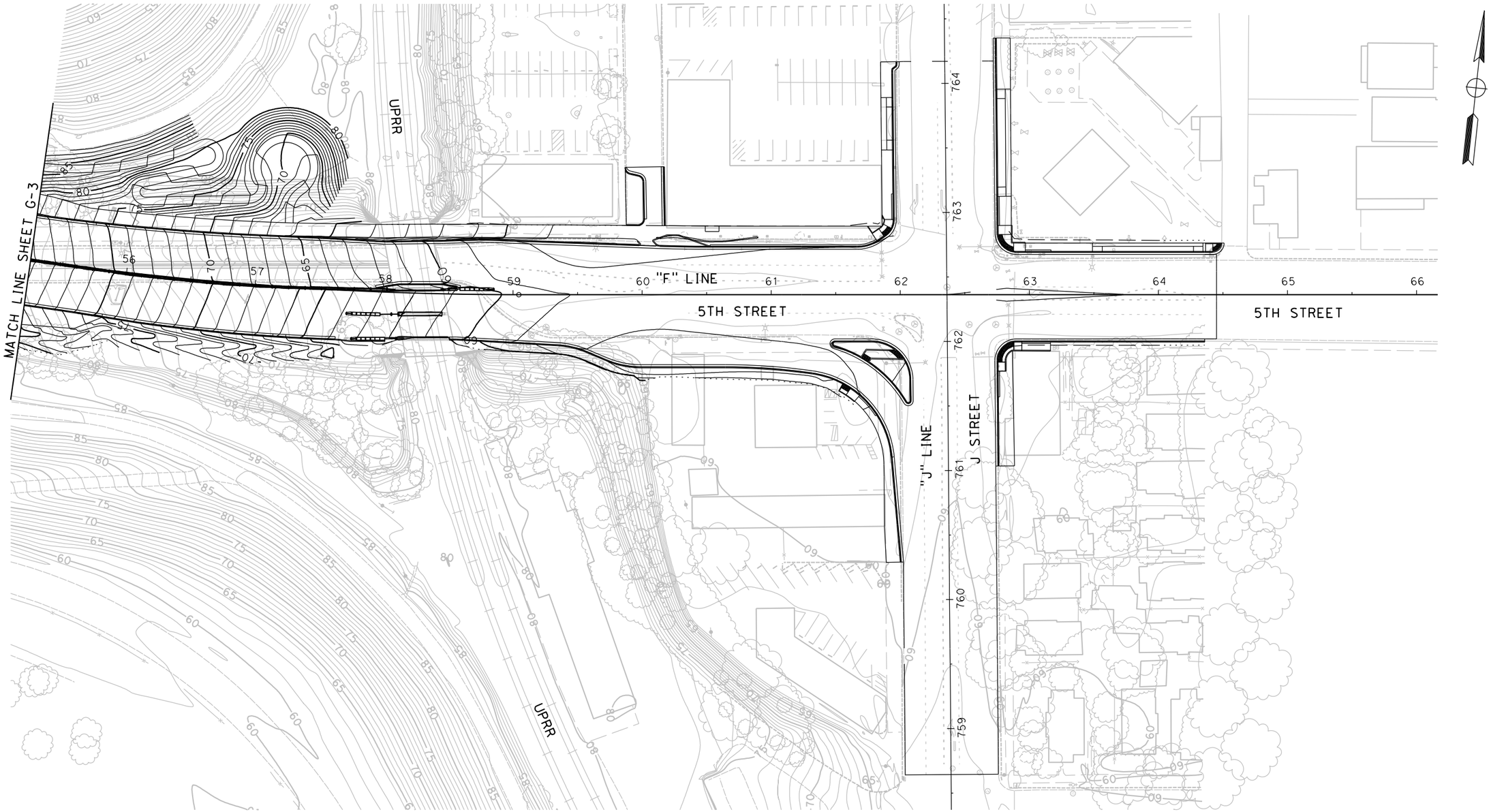

FOR REDUCED PLANS
ORIGINAL SCALE IS IN INCHES
0 1 2 3
ALL DIMENSIONS SHOWN IN FEET
UNLESS OTHERWISE NOTED

8/15/2016

...\511\1858ha004.dgn

REVISION #	DATE	DESCRIPTION AND SHEET NO.	APPROVED BY	DATE

REGISTERED PROFESSIONAL ENGINEER
MEGAN R. CARTER
No. 75885
Exp. 6/30/18
CIVIL
STATE OF CALIFORNIA

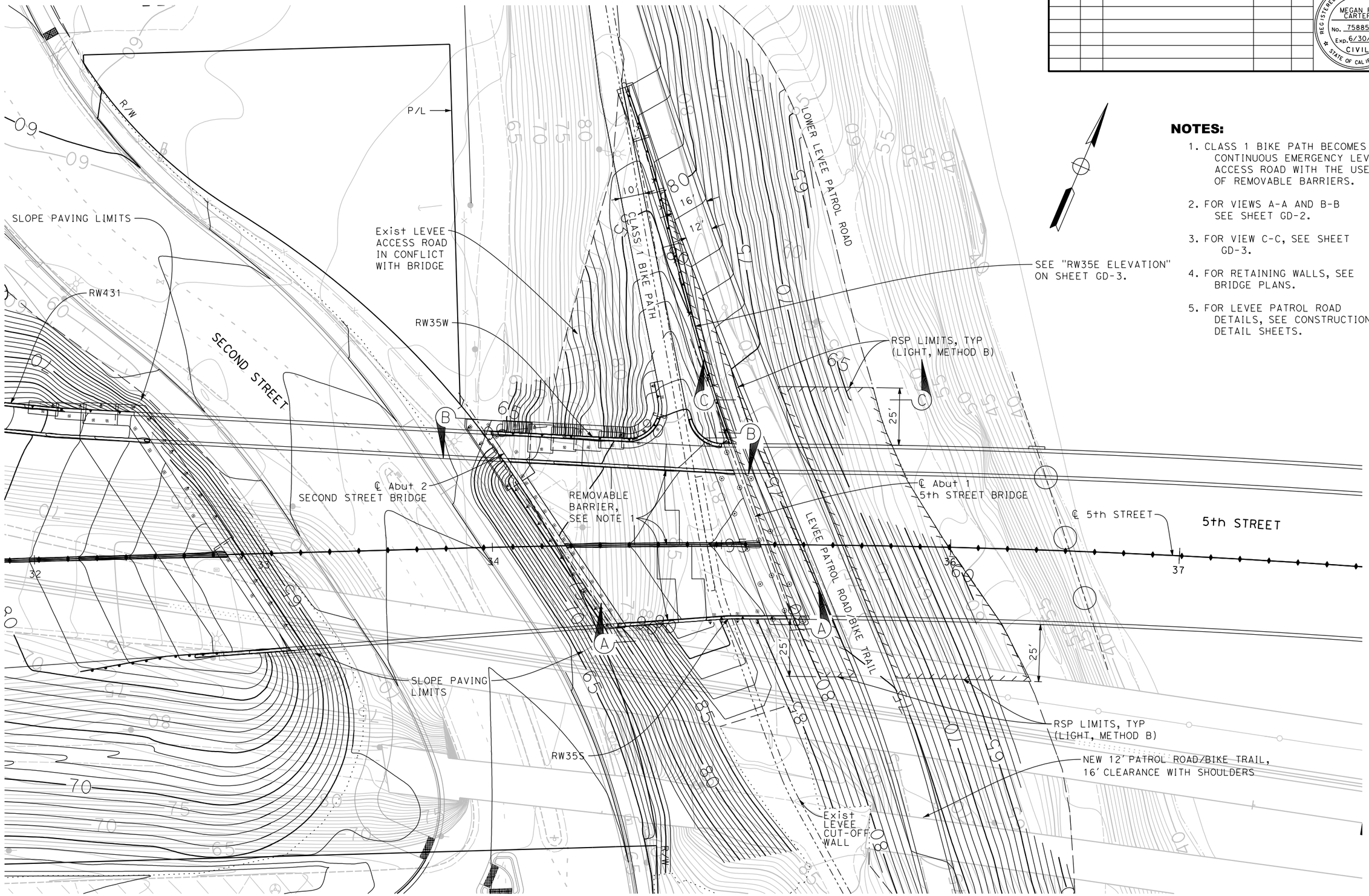

NOTES:

1. CLASS 1 BIKE PATH BECOMES CONTINUOUS EMERGENCY LEVEE ACCESS ROAD WITH THE USE OF REMOVABLE BARRIERS.
2. FOR VIEWS A-A AND B-B SEE SHEET GD-2.
3. FOR VIEW C-C, SEE SHEET GD-3.
4. FOR RETAINING WALLS, SEE BRIDGE PLANS.
5. FOR LEVEE PATROL ROAD DETAILS, SEE CONSTRUCTION DETAIL SHEETS.

SECOND STREET ABUTMENT 2 AND 5th ABUTMENT 1 PLAN

FOR REDUCED PLANS ORIGINAL SCALE IS IN INCHES 0 1 2 3 ALL DIMENSIONS SHOWN IN FEET UNLESS OTHERWISE NOTED

GD-1

PLAN SCALE: 1"=20'
PROFILE SCALE:
HORIZ:
VERT:

CONTRACT NO: 17-XX
DESIGNED: M. CARTER
DRAWN: K. DANG
CHECKED:
RECORD DRAWING: DATE:

DOKKEN ENGINEERING
110 BLUE RAVINE ROAD #200
FOLSOM, CA 95630
PHONE: (916) 858-0642
FAX: (916) 985-1845

CITY OF YUBA CITY

5TH STREET BRIDGE REPLACEMENT
CONTOUR GRADING DETAILS

SHEET NO.
OF
215

8/15/2016

...\511\1858h0001.dgn

REVISION #	DATE	DESCRIPTION AND SHEET NO.	APPROVED BY	DATE

REGISTERED PROFESSIONAL ENGINEER
ROSA GRIGGS
No. 54169
Exp. 12-31-17
CIVIL
STATE OF CALIFORNIA

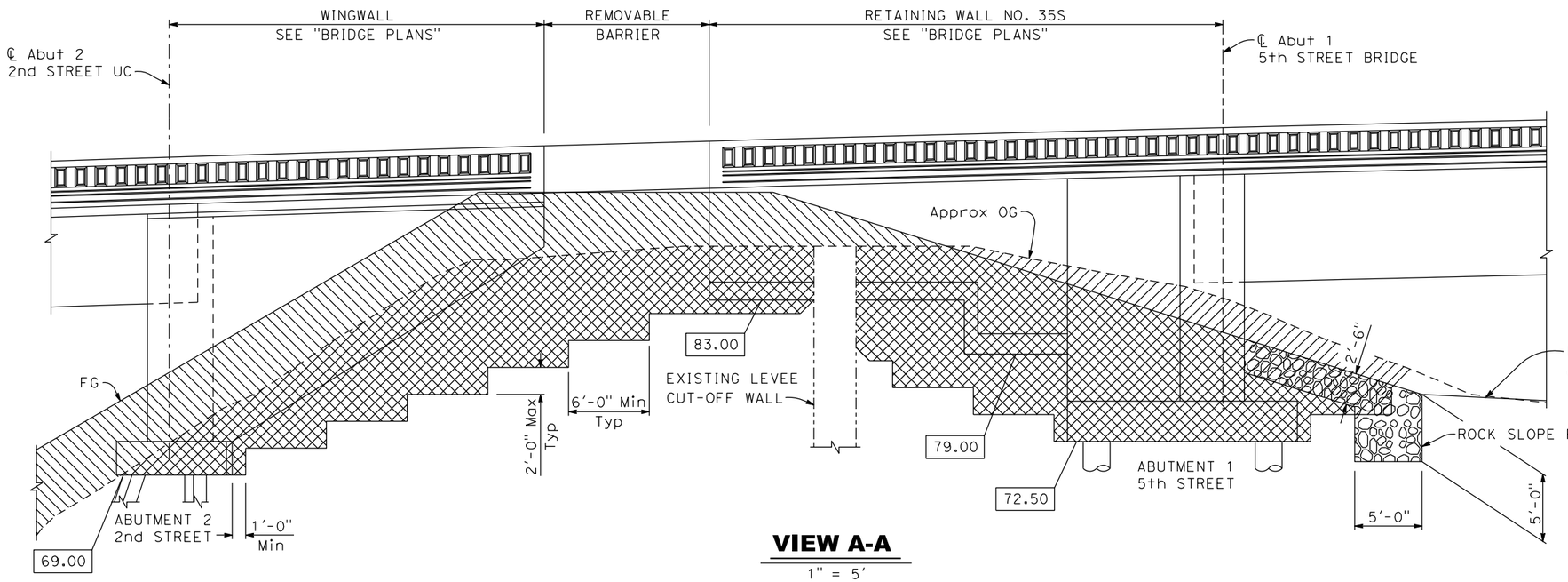

VIEW A-A

1" = 5'

LEGEND:

- LIMITS OF LEVEE EXCAVATION
- LIMITS OF LEVEE BACKFILL
- DENOTES ROCK SLOPE PROTECTION
- XX.XX DENOTES BOTTOM OF FOOTING ELEVATION

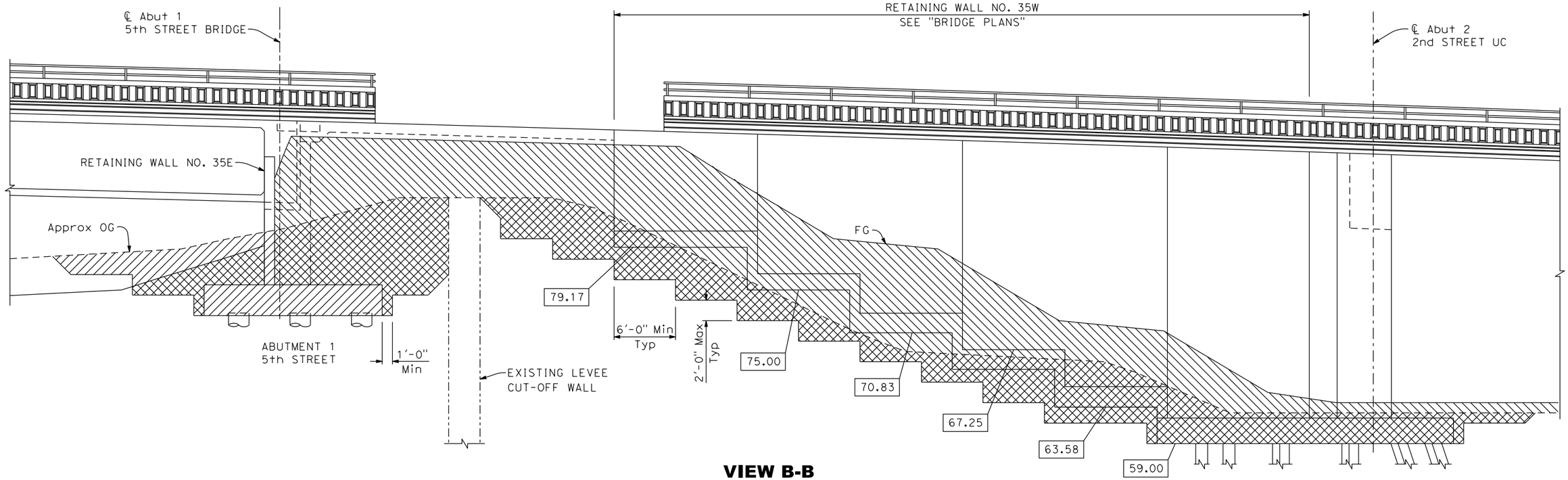

VIEW B-B

1" = 5'

FOR REDUCED PLANS
ORIGINAL SCALE IS IN INCHES

0 1 2 3

ALL DIMENSIONS SHOWN IN FEET
UNLESS OTHERWISE NOTED

GD-2

PLAN SCALE:
PROFILE SCALE:
HORIZ:
VERT:

CONTRACT NO: 17-XX
DESIGNED: R. GRIGGS
DRAWN: K. DANG
CHECKED:
RECORD DRAWING:
DATE:

DOKKEN ENGINEERING
110 BLUE RAVINE ROAD #200
FOLSOM, CA 95630
PHONE: (916) 858-0642
FAX: (916) 985-1845

CITY OF YUBA CITY

5TH STREET BRIDGE REPLACEMENT
CONTOUR GRADING DETAILS

SHEET NO.
OF
215

8/15/2016

...\5111\858hb002.dgn

LEGEND:

- LIMITS OF LEVEE EXCAVATION
- LIMITS OF LEVEE BACKFILL
- XX.XX DENOTES BOTTOM OF FOOTING ELEVATION
- DENOTES ROCK SLOPE PROTECTION

REVISION #	DATE:	DESCRIPTION AND SHEET NO.:	APPROVED BY:	DATE:

REGISTERED PROFESSIONAL ENGINEER
ROSA GRIGGS
No. 54169
Exp. 12-31-17
CIVIL
STATE OF CALIFORNIA

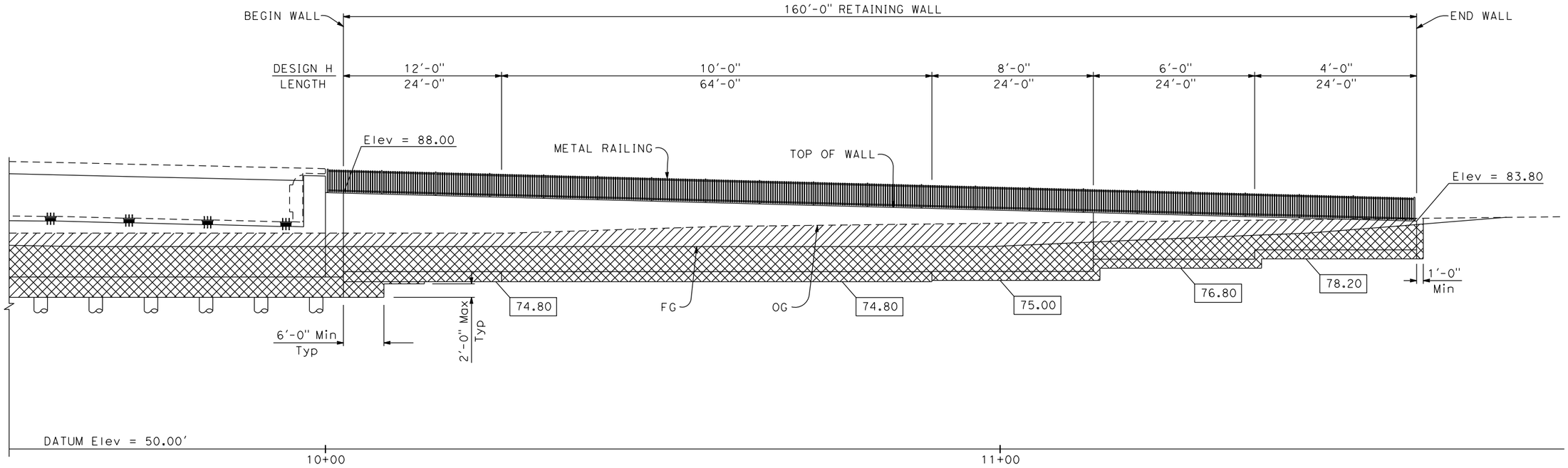

RW35E ELEVATION

1/8" = 1'-0"

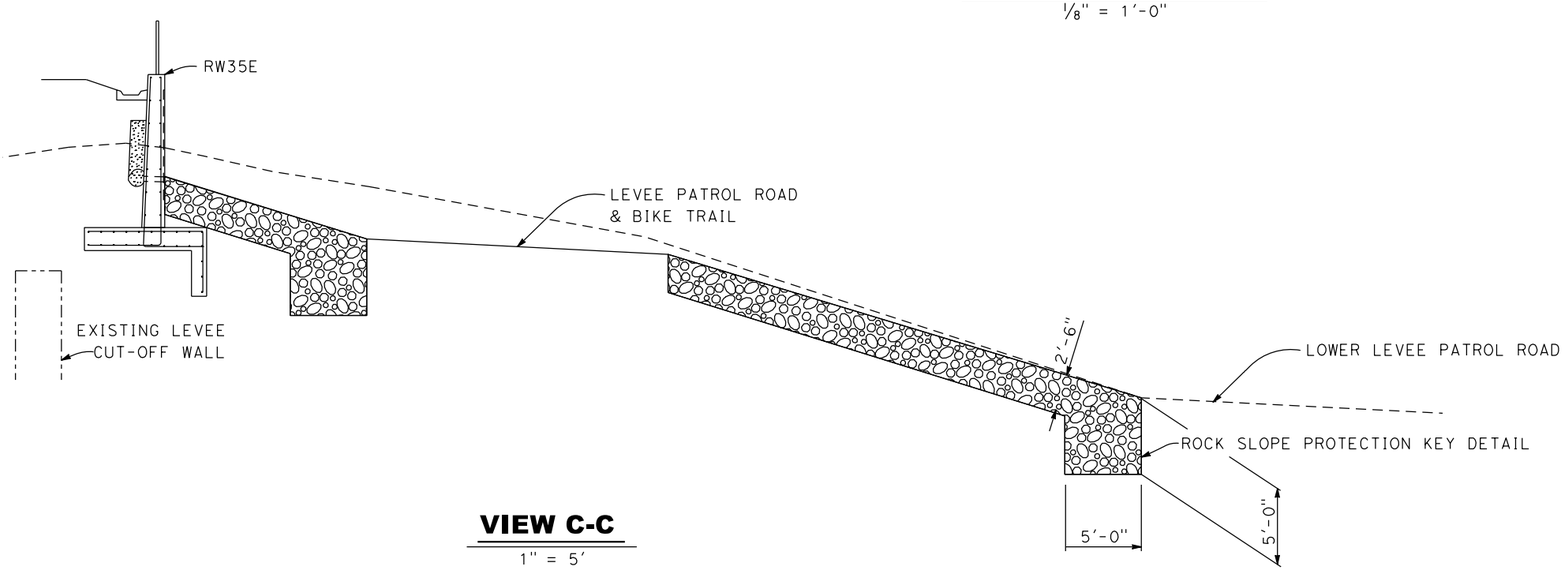

VIEW C-C

1" = 5'

FOR REDUCED PLANS
ORIGINAL SCALE IS IN INCHES
0 1 2 3

ALL DIMENSIONS SHOWN IN FEET
UNLESS OTHERWISE NOTED

GD-3

PLAN SCALE:
PROFILE SCALE:
HORIZ:
VERT:

CONTRACT NO: 17-XX
DESIGNED: R. GRIGGS
DRAWN: K. DANG
CHECKED:
RECORD DRAWING:
DATE:

DOKKEN ENGINEERING
110 BLUE RAVINE ROAD #200
FOLSOM, CA 95630
PHONE: (916) 858-0642
FAX: (916) 985-1845

CITY OF YUBA CITY

5TH STREET BRIDGE REPLACEMENT
CONTOUR GRADING DETAILS

SHEET NO.
OF
215

8/15/2016

...\51\1858hb003.dgn

REVISION #	DATE	DESCRIPTION AND SHEET NO.	APPROVED BY	DATE

REGISTERED PROFESSIONAL ENGINEER
ROSA GRIGGS
No. 54169
Exp. 12-31-17
CIVIL
STATE OF CALIFORNIA

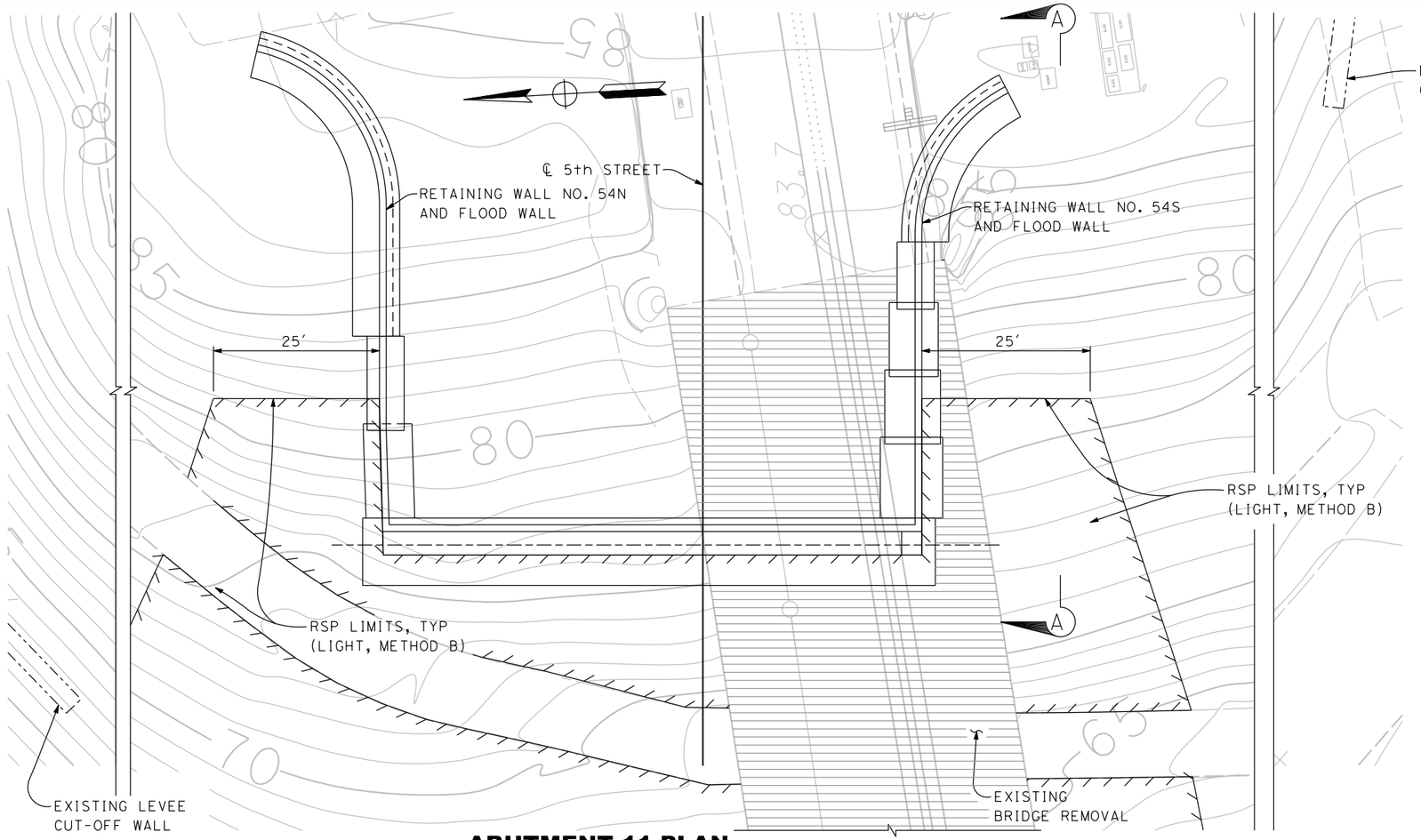

ABUTMENT 11 PLAN

1" = 10′

LEGEND:

- LIMITS OF LEVEE EXCAVATION, STAGE 1 CONSTRUCTION
- LIMITS OF LEVEE BACKFILL, STAGE 1 CONSTRUCTION
- LIMITS OF LEVEE EXCAVATION, STAGE 2 CONSTRUCTION
- LIMITS OF LEVEE BACKFILL, STAGE 2 CONSTRUCTION
- DENOTES ROCK SLOPE PROTECTION
- DENOTES EXISTING BRIDGE REMOVAL, STAGE 2 CONSTRUCTION
- XX.XX DENOTES BOTTOM OF FOOTING ELEVATION

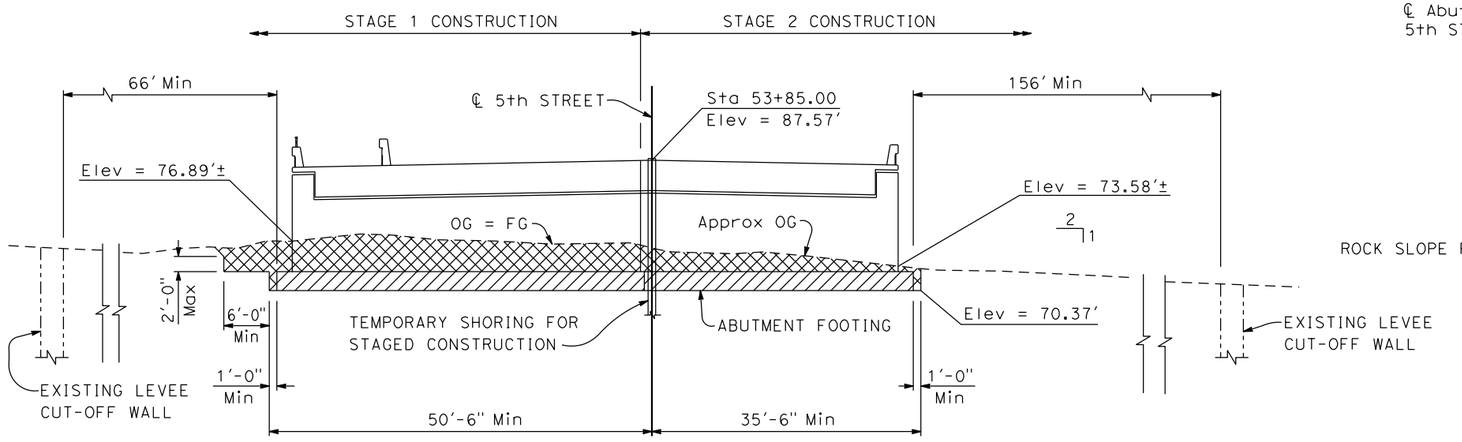

ABUTMENT 11 ELEVATION

1" = 10′

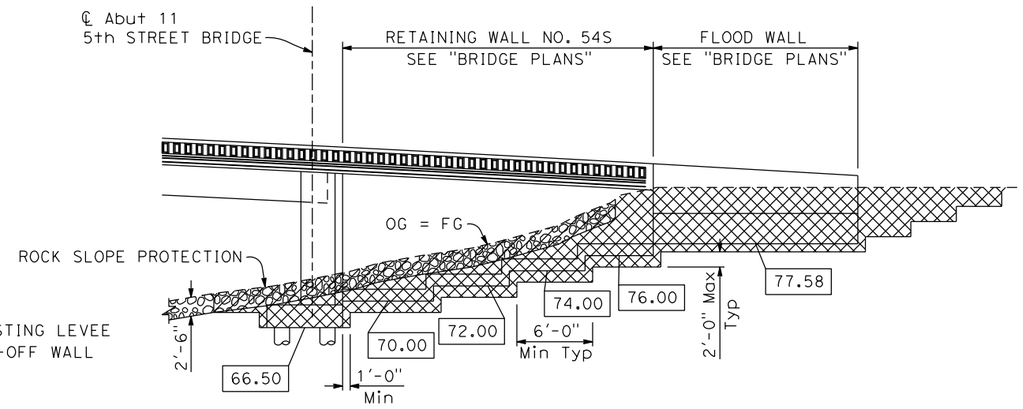

VIEW A-A (MARYSVILLE LEVEE)

1" = 10′

FOR REDUCED PLANS
ORIGINAL SCALE IS IN INCHES

0 1 2 3

ALL DIMENSIONS SHOWN IN FEET
UNLESS OTHERWISE NOTED

GD-4

PLAN SCALE:
PROFILE SCALE:
HORIZ:
VERT:

CONTRACT NO: **17-XX**
DESIGNED: R. GRIGGS
DRAWN: K. DANG
CHECKED:
RECORD DRAWING:
DATE:

DOKKEN ENGINEERING
110 BLUE RAVINE ROAD #200
FOLSOM, CA 95630
PHONE: (916) 858-0642
FAX: (916) 985-1845

CITY OF
YUBA CITY

5TH STREET BRIDGE REPLACEMENT
CONTOUR GRADING DETAILS

SHEET NO.
OF
215

8/15/2016
...\511\1858hb004.dgn

LEGEND:

- XX — DRAINAGE SYSTEM NUMBER
- # — DRAINAGE ELEMENT
- # — DITCH NUMBER
- MH — STORM DRAIN MANHOLE
- RSP - BACKING No. 2, METHOD B
- PIPE TO BE REMOVED
- UD — UNDER SIDEWALK DRAIN

NOTES:

1. EXISTING DRAINAGE FACILITIES ARE TO REMAIN AND BE PROTECTED IN PLACE UNLESS OTHERWISE NOTED.
2. DI DR5'S ARE TO BE STANDARD DROP INLET DRAINAGE GRATE ASSEMBLY, CITY OF YUBA CITY STD PLAN DRAWING No. DR5.
3. DI 304'S ARE TO BE STANDARD DROP INLET GRATE ASSEMBLY, CITY OF MARYSVILLE STD PLAN DRAWING No. 304.
4. DI GOL'S ARE TO BE STANDARD DRAINAGE INLET GOL-7, CALTRANS STD PLAN DRAWING No. D72A.
5. DI G1'S ARE TO BE STANDARD DRAINAGE INLET G1, CALTRANS STD PLAN DRAWING No. D73B.
6. DI GMP'S ARE TO BE STANDARD STEEL PIPE INLET-GMP, CALTRANS STD PLAN DRAWING No. D75A.
7. DI OMP'S ARE TO BE STANDARD STEEL PIPE INLET-OMP, CALTRANS STD PLAN DRAWING No. D75A.
8. DI GCP'S ARE TO BE STANDARD CONCRETE PIPE INLET-GCP, CALTRNAS STD PLAN DRAWING No. D75B.
9. MH'S ARE TO BE STANDARD STORM DRAIN MANHOLE, CITY OF YUBA CITY STD PLAN DRAWING No. DR1. STORM DRAIN MANHOLE FRAME AND COVER PER DR2.
10. SHALLOW MH'S ARE TO BE STANDARD SHALLOW MANHOLE, CITY OF YUBA CITY STD PLAN DRAWING No. DR1.
11. FOR INFORMATION NOT SHOWN REGARDING DRAINAGE FACILITIES, SEE DRAINAGE DETAILS.

REVISION #	DATE:	DESCRIPTION AND SHEET NO.:	APPROVED BY:	DATE:

REGISTERED PROFESSIONAL ENGINEER — AMANDA J. LEE — No. 84180 — Exp. 9-30-17 — CIVIL — STATE OF CALIFORNIA

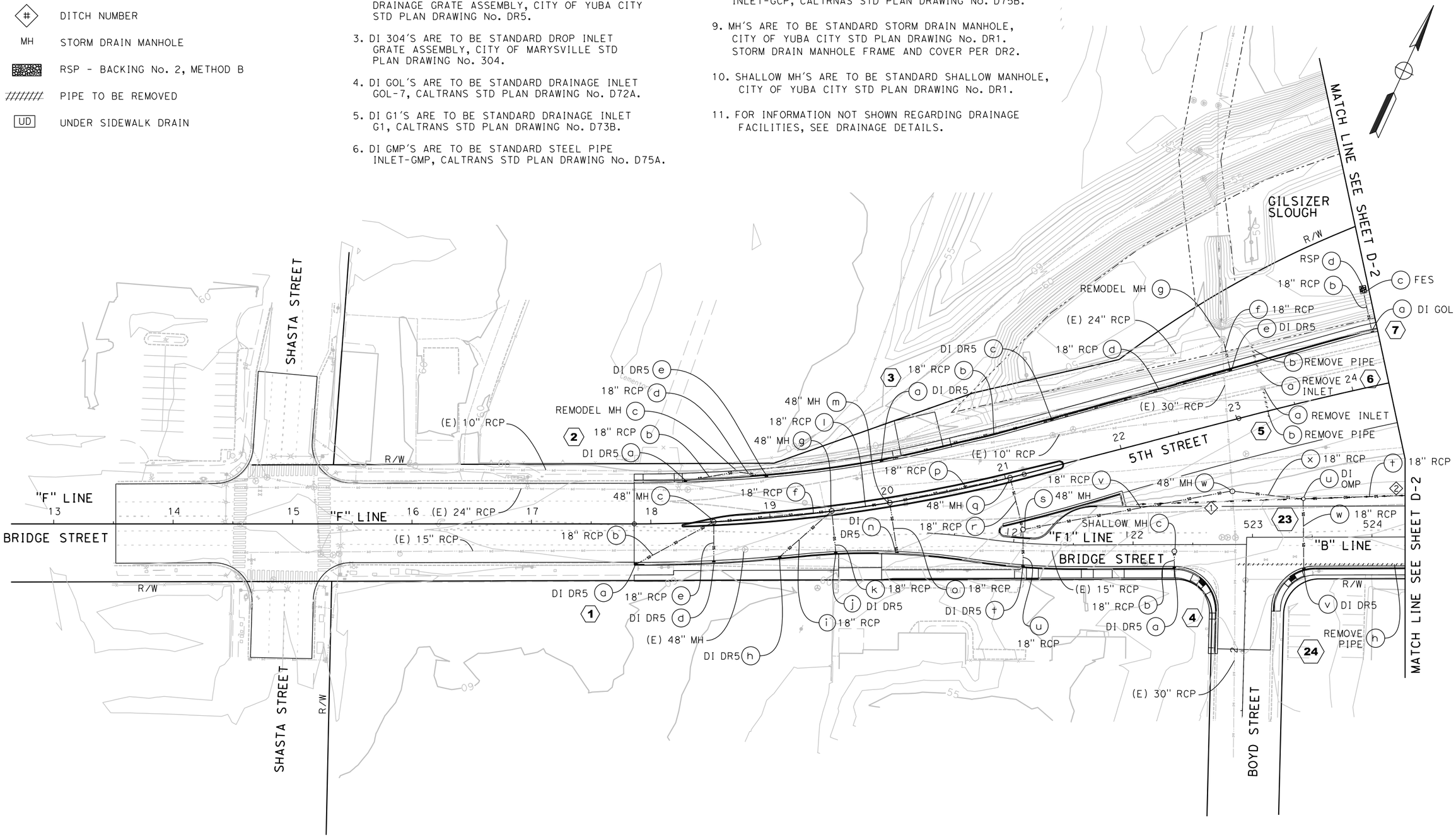

FOR REDUCED PLANS ORIGINAL SCALE IS IN INCHES — 0 1 2 3 — ALL DIMENSIONS SHOWN IN FEET UNLESS OTHERWISE NOTED

D-1

PLAN SCALE: 1"=40'
PROFILE SCALE:
HORIZ:
VERT:

CONTRACT NO: 17-XX
DESIGNED: A. LEE
DRAWN: A. LEE
CHECKED:
RECORD DRAWING:
DATE:

DOKKEN ENGINEERING
110 BLUE RAVINE ROAD #200
FOLSOM, CA 95630
PHONE: (916) 858-0642
FAX: (916) 858-0643

CITY OF YUBA CITY

5TH STREET BRIDGE REPLACEMENT

DRAINAGE PLAN

SHEET NO.
OF
215

8/15/2016

...\51\18581a001.dgn

REVISION #	DATE:	DESCRIPTION AND SHEET NO.:	APPROVED BY:	DATE:

REGISTERED PROFESSIONAL ENGINEER
AMANDA J. LEE
No. 84180
Exp. 9-30-17
CIVIL
STATE OF CALIFORNIA

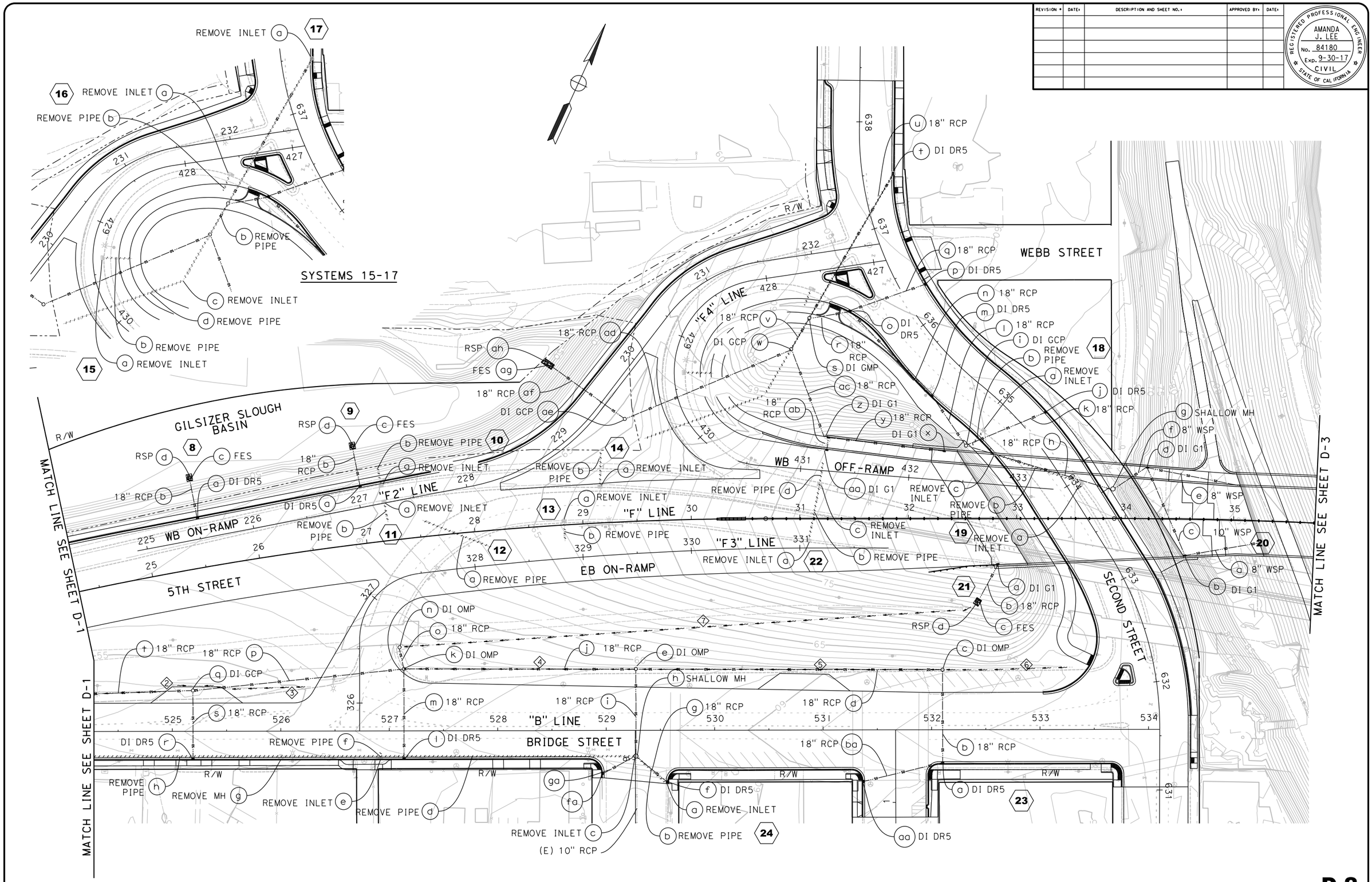

FOR REDUCED PLANS ORIGINAL SCALE IS IN INCHES 0 1 2 3

ALL DIMENSIONS SHOWN IN FEET UNLESS OTHERWISE NOTED

D-2

PLAN SCALE: 1"=40'
PROFILE SCALE:
HORIZ:
VERT:

CONTRACT NO: 17-XX
DESIGNED: A. LEE
DRAWN: A. LEE
CHECKED:
RECORD DRAWING:
DATE:

DOKKEN ENGINEERING
110 BLUE RAVINE ROAD #200
FOLSOM, CA 95630
PHONE: (916) 858-0642
FAX: (916) 858-0643

CITY OF YUBA CITY

5TH STREET BRIDGE REPLACEMENT
DRAINAGE PLAN

SHEET NO.
OF
215

8/15/2016

...\511\18581a002.dgn

REVISION #	DATE:	DESCRIPTION AND SHEET NO.:	APPROVED BY:	DATE:

REGISTERED PROFESSIONAL ENGINEER
AMANDA J. LEE
No. 84180
Exp. 9-30-17
CIVIL
STATE OF CALIFORNIA

PLAN SCALE: 1"=40'
PROFILE SCALE:
HORIZ:
VERT:

CONTRACT NO: 17-XX
DESIGNED: A. LEE
DRAWN: A. LEE
CHECKED:
RECORD DRAWING:
DATE:

DOKKEN ENGINEERING
110 BLUE RAVINE ROAD #200
FOLSOM, CA 95630
PHONE: (916) 858-0642
FAX: (916) 985-1845

CITY OF YUBA CITY

5TH STREET BRIDGE REPLACEMENT

DRAINAGE PLAN

SHEET NO. 3 OF 215

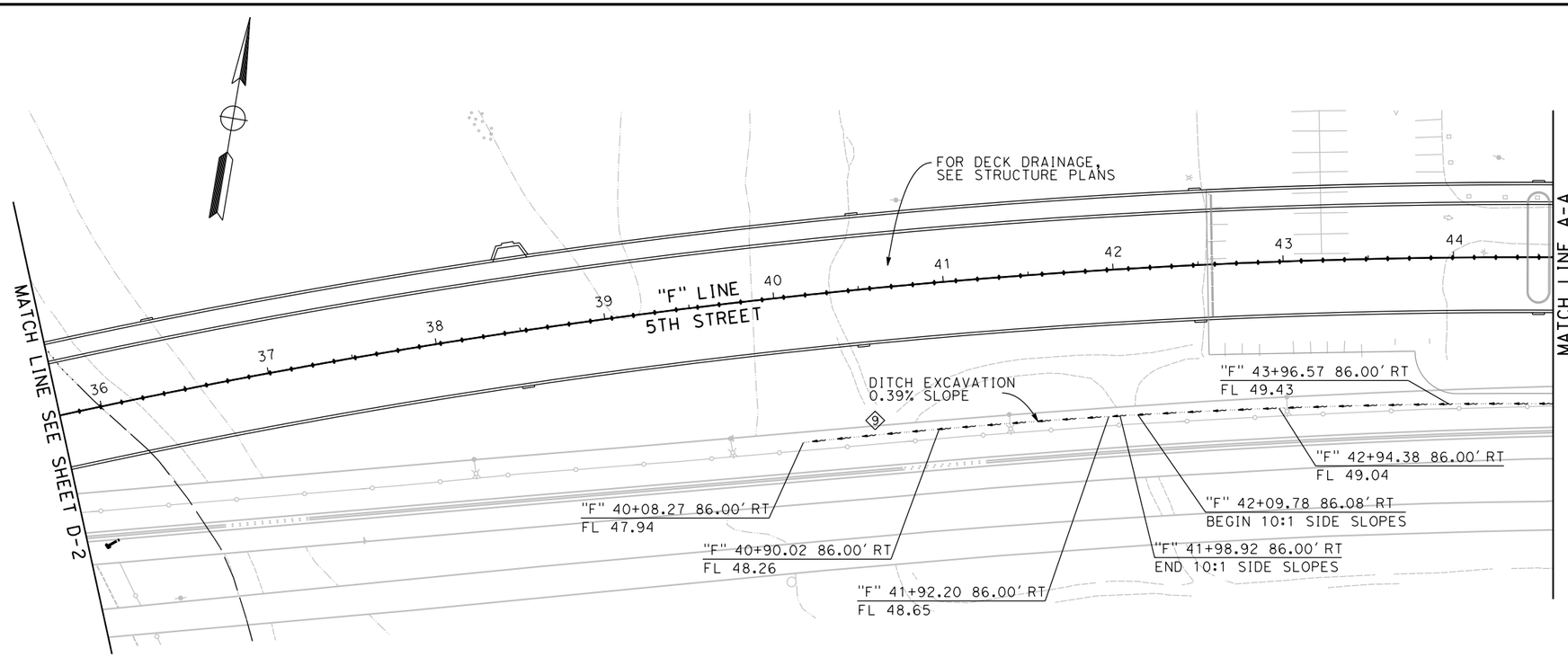

STA "F" 41+98.92 TO 42+09.78

STA "F" 42+30.17 TO 51+11.85
STA "F" 40+08.27 TO 41+78.49

SIDE SLOPE TRANSITIONS SHALL BE 20 FEET

9 V-DITCH DETAIL

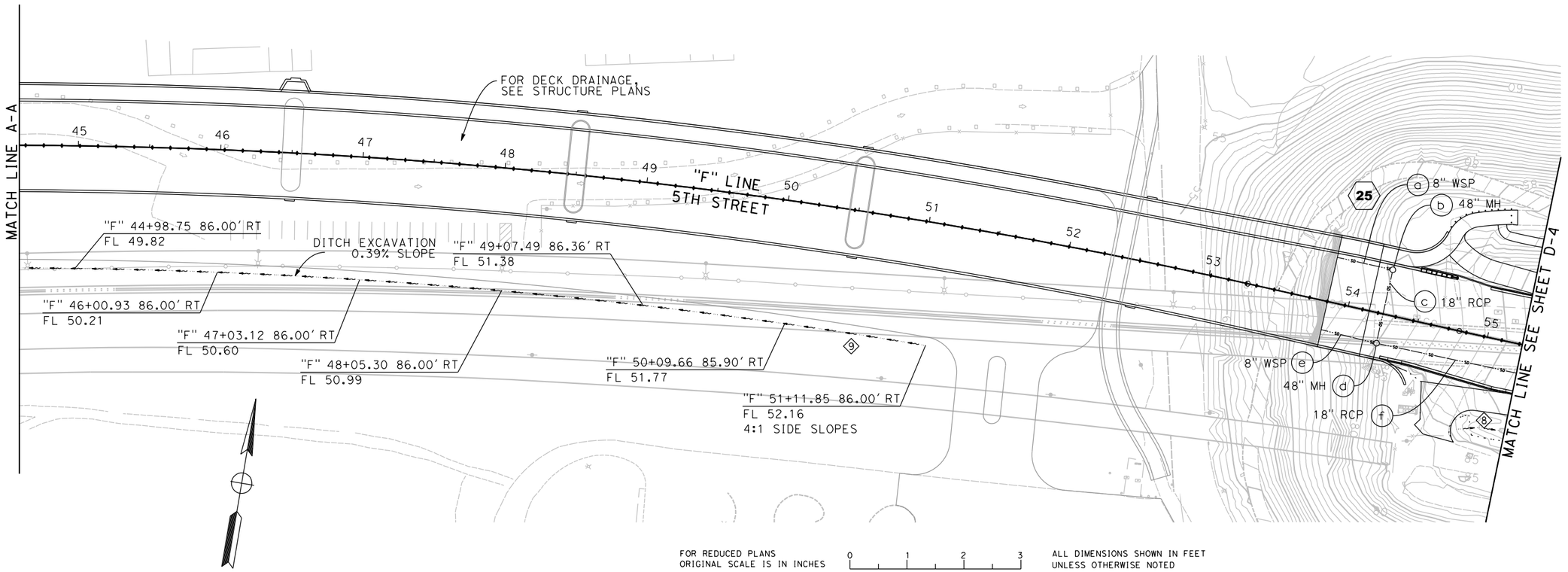

FOR REDUCED PLANS
ORIGINAL SCALE IS IN INCHES

0 1 2 3

ALL DIMENSIONS SHOWN IN FEET
UNLESS OTHERWISE NOTED

D-3

8/15/2016

...\51\18581a003.dgn

REVISION #	DATE:	DESCRIPTION AND SHEET NO.:	APPROVED BY:	DATE:

REGISTERED PROFESSIONAL ENGINEER
AMANDA J. LEE
No. 84180
Exp. 9-30-17
CIVIL
STATE OF CALIFORNIA

PLAN SCALE: 1"=40'
PROFILE SCALE:
HORIZ:
VERT:

CONTRACT NO: 17-XX
DESIGNED: A. LEE
DRAWN: A. LEE
CHECKED:
RECORD DRAWING: DATE:

DOKKEN ENGINEERING
110 BLUE RAVINE ROAD #200
FOLSOM, CA 95630
PHONE: (916) 858-0642
FAX: (916) 985-1865

CITY OF YUBA CITY

5TH STREET BRIDGE REPLACEMENT

DRAINAGE PLAN

SHEET NO.
OF
215

D-4

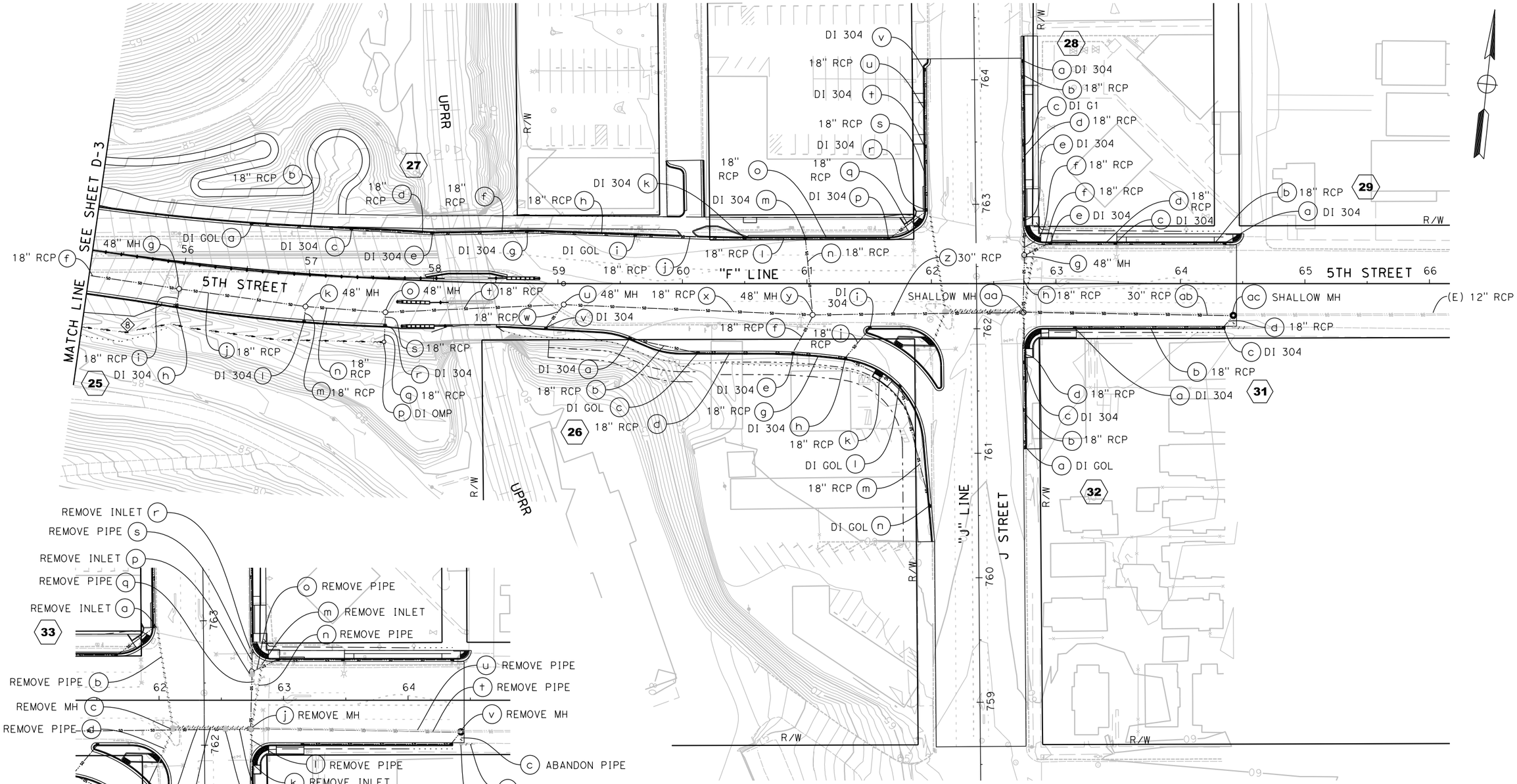

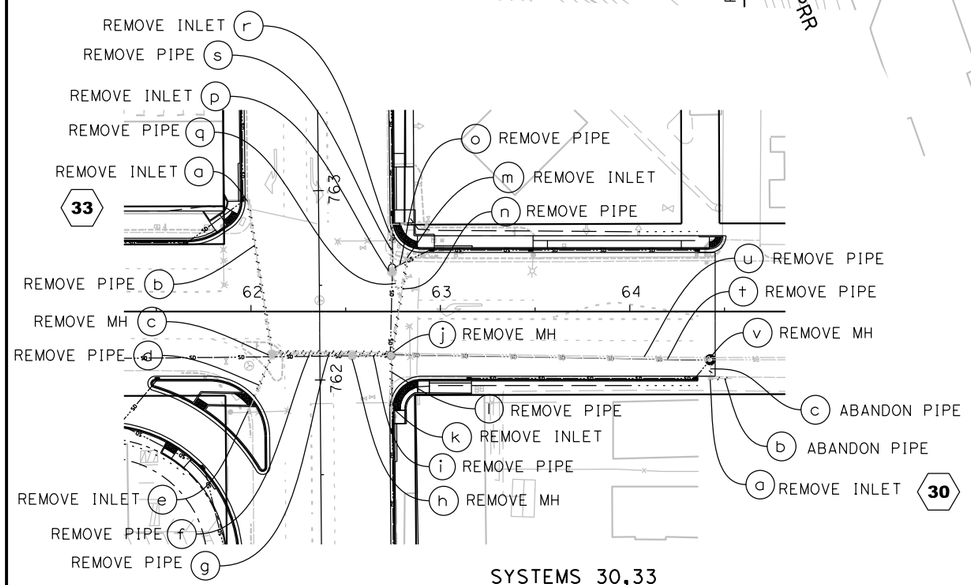

SYSTEMS 30,33

FOR REDUCED PLANS
ORIGINAL SCALE IS IN INCHES

0 1 2 3

ALL DIMENSIONS SHOWN IN FEET
UNLESS OTHERWISE NOTED

8/15/2016

...\511\18581a004.dgn

REVISION #	DATE:	DESCRIPTION AND SHEET NO.:	APPROVED BY:	DATE:

REGISTERED PROFESSIONAL ENGINEER
AMANDA J. LEE
No. 84180
Exp. 9-30-17
CIVIL
STATE OF CALIFORNIA

LEGEND:

MINOR CONCRETE (BACKFILL)

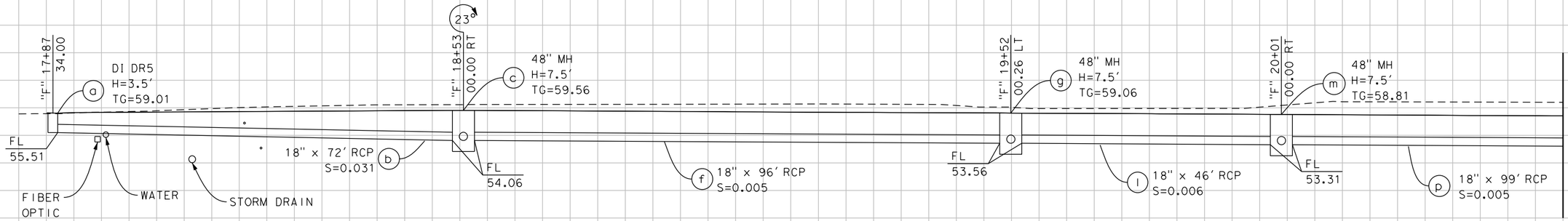

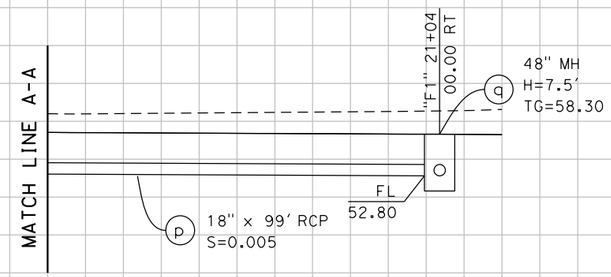

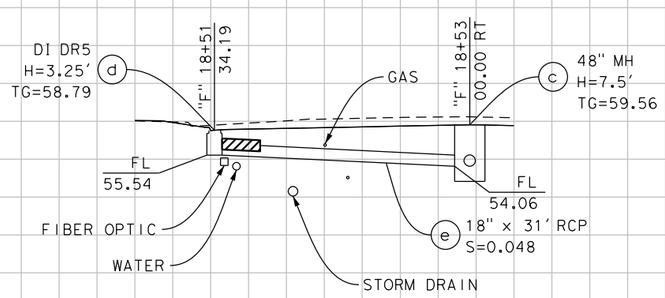

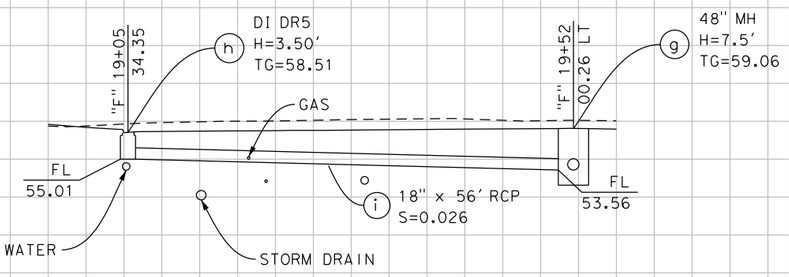

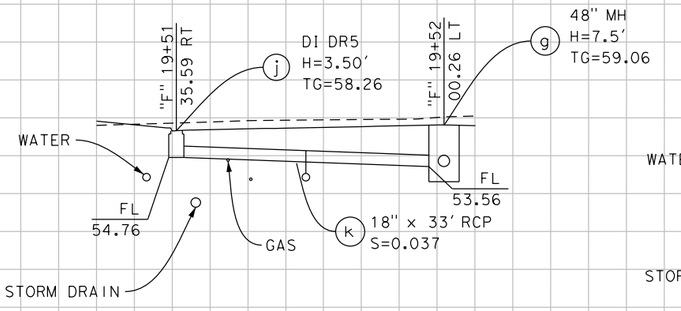

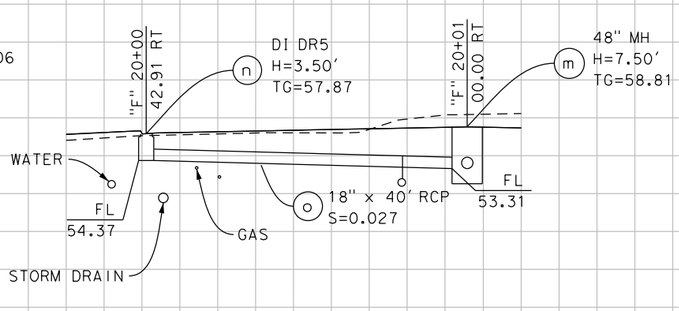

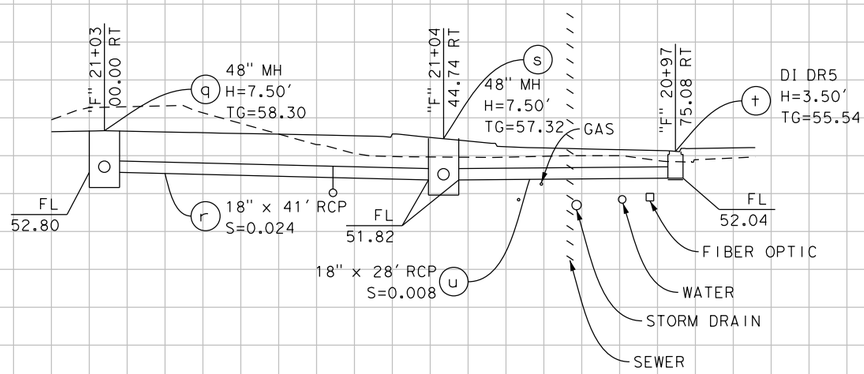

DRAINAGE SYSTEM No. 1

FOR REDUCED PLANS
ORIGINAL SCALE IS IN INCHES
0 1 2 3
ALL DIMENSIONS SHOWN IN FEET
UNLESS OTHERWISE NOTED

DRAINAGE SYSTEM No. 1 **DP-1**

PLAN SCALE: N/A
PROFILE SCALE: 1"=10'
HORIZ: 1"=10'
VERT: 1"=10'

CONTRACT NO: 17-XX
DESIGNED: A. LEE
DRAWN: A. LEE
CHECKED:
RECORD DRAWING: DATE:

DOKKEN ENGINEERING
110 BLUE RAVINE ROAD #200
FOLSOM, CA 95630
PHONE: (916) 858-0642
FAX: (916) 985-1845

CITY OF YUBA CITY

5TH STREET BRIDGE REPLACEMENT
DRAINAGE PROFILE

SHEET NO.
OF
215

8/15/2016

...\511\18581b001.dgn

REVISION #	DATE:	DESCRIPTION AND SHEET NO.:	APPROVED BY:	DATE:

REGISTERED PROFESSIONAL ENGINEER
AMANDA J. LEE
No. 84180
Exp. 9-30-17
CIVIL
STATE OF CALIFORNIA

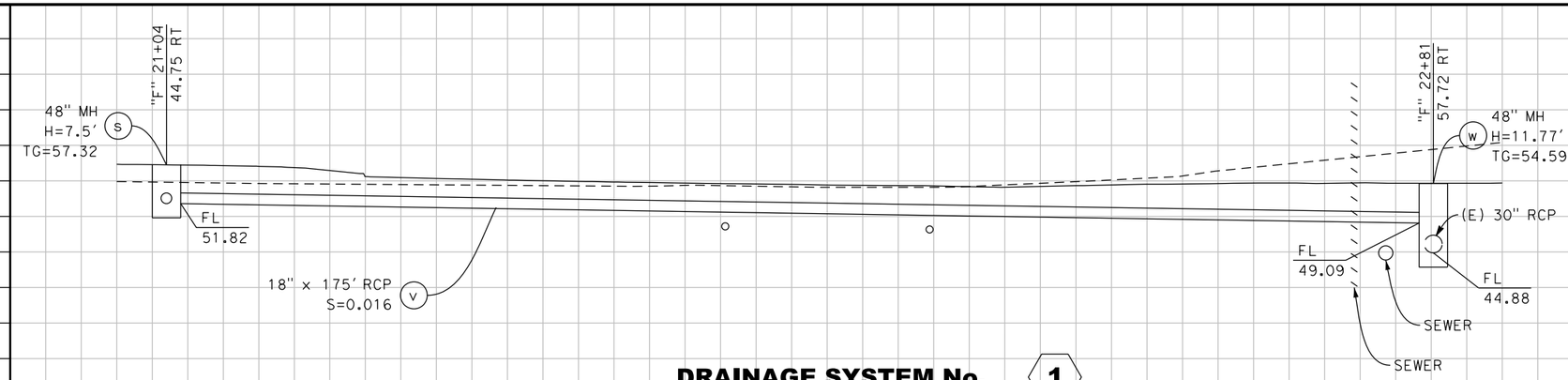

DRAINAGE SYSTEM No. 1

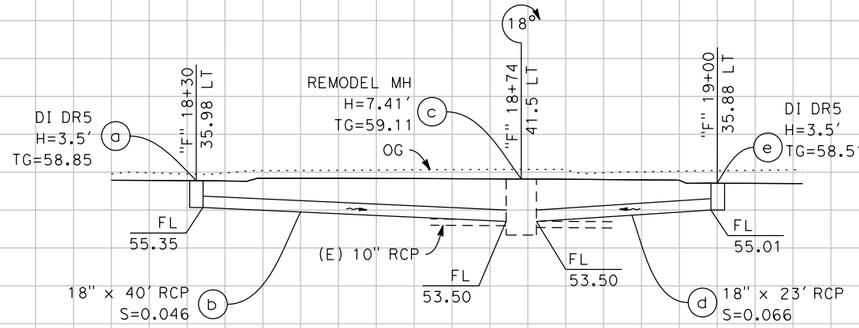

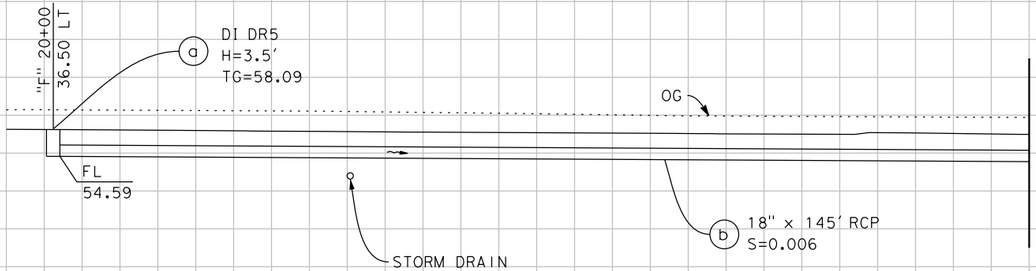

DRAINAGE SYSTEM No. 2

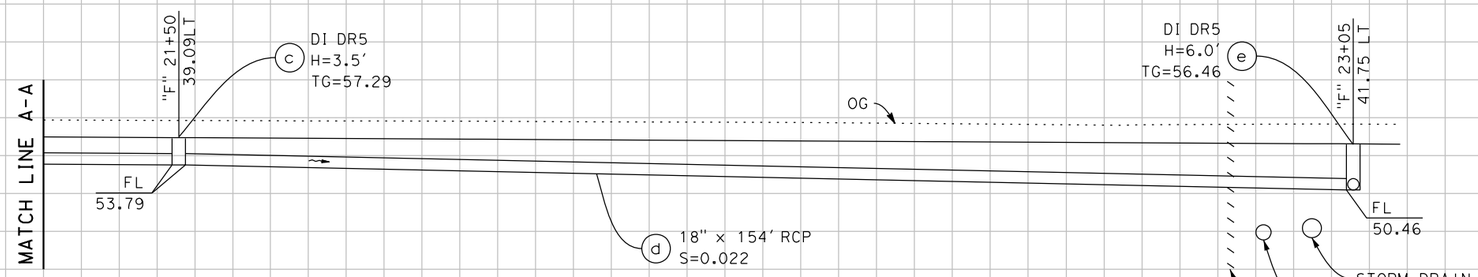

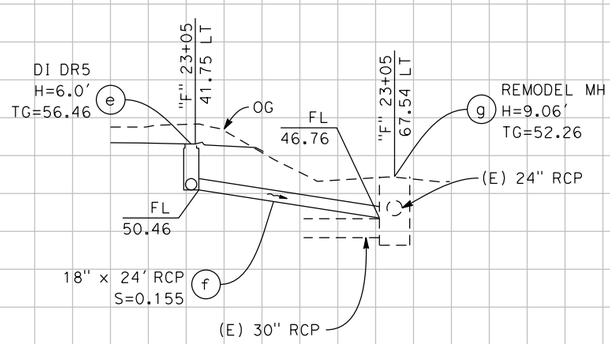

DRAINAGE SYSTEM No. 3

FOR REDUCED PLANS
ORIGINAL SCALE IS IN INCHES
0 1 2 3
ALL DIMENSIONS SHOWN IN FEET
UNLESS OTHERWISE NOTED

1 2 3

DP-2

PLAN SCALE: N/A
PROFILE SCALE: 1"=10'
HORIZ: 1"=10'
VERT: 1"=10'

CONTRACT NO: 17-XX
DESIGNED: A. LEE
DRAWN: A. LEE
CHECKED:
RECORD DRAWING: DATE:

DOKKEN ENGINEERING
110 BLUE RAVINE ROAD #200
FOLSOM, CA 95630
PHONE: (916) 858-0642
FAX: (916) 858-0643

CITY OF YUBA CITY

5TH STREET BRIDGE REPLACEMENT

DRAINAGE PROFILE

SHEET NO.
OF
215

8/15/2016

...\511\18581b002.dgn

REVISION #	DATE:	DESCRIPTION AND SHEET NO.:	APPROVED BY:	DATE:

REGISTERED PROFESSIONAL ENGINEER
AMANDA J. LEE
No. 84180
Exp. 9-30-17
CIVIL
STATE OF CALIFORNIA

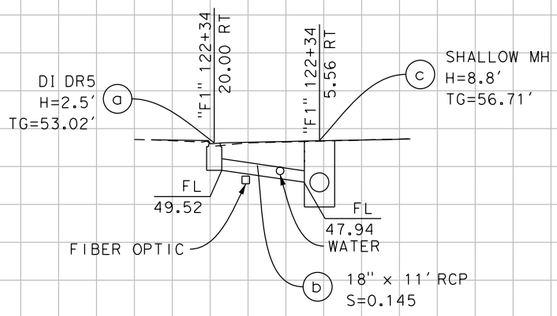

DRAINAGE SYSTEM No. 4

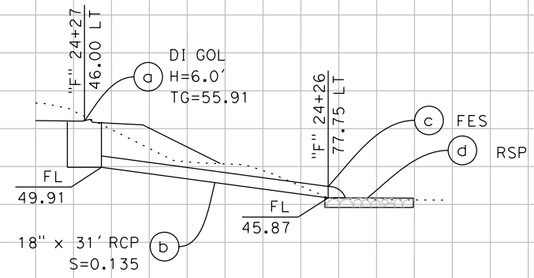

DRAINAGE SYSTEM No. 7

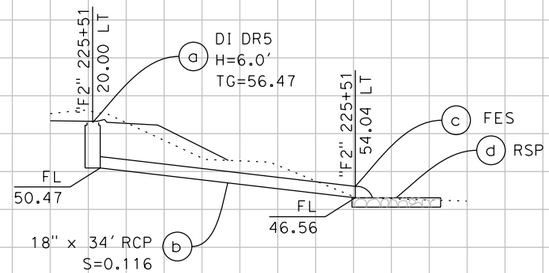

DRAINAGE SYSTEM No. 8

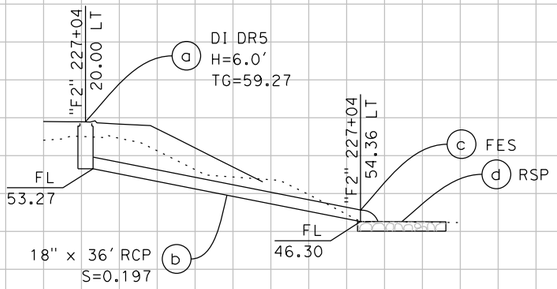

DRAINAGE SYSTEM No. 9

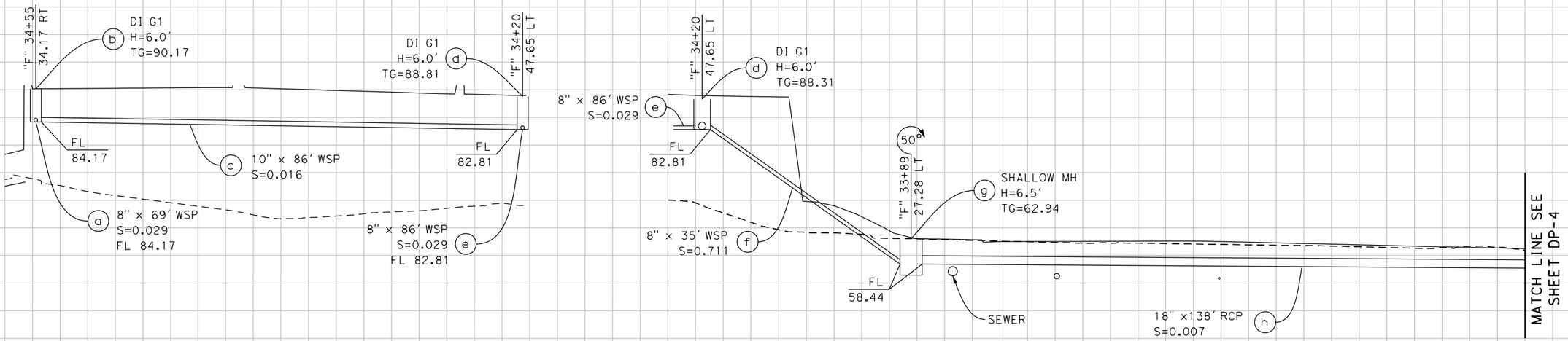

DRAINAGE SYSTEM No. 20

FOR REDUCED PLANS
ORIGINAL SCALE IS IN INCHES
0 1 2 3
ALL DIMENSIONS SHOWN IN FEET
UNLESS OTHERWISE NOTED

4 7 8 9 20

DP-3

PLAN SCALE: N/A
PROFILE SCALE: 1"=10'
HORIZ: 1"=10'
VERT: 1"=10'

CONTRACT NO: 17-XX
DESIGNED: A. LEE
DRAWN: A. LEE
CHECKED:
RECORD DRAWING:
DATE:

DOKKEN ENGINEERING
110 BLUE RAVINE ROAD #200
FOLSOM, CA 95630
PHONE: (916) 858-0642
FAX: (916) 985-1845

CITY OF YUBA CITY

5TH STREET BRIDGE REPLACEMENT

DRAINAGE PROFILE

SHEET NO.
OF
215

8/15/2016

...\51\1858b003.dgn

REVISION #	DATE:	DESCRIPTION AND SHEET NO.:	APPROVED BY:	DATE:

REGISTERED PROFESSIONAL ENGINEER
AMANDA J. LEE
No. 84180
Exp. 9-30-17
CIVIL
STATE OF CALIFORNIA

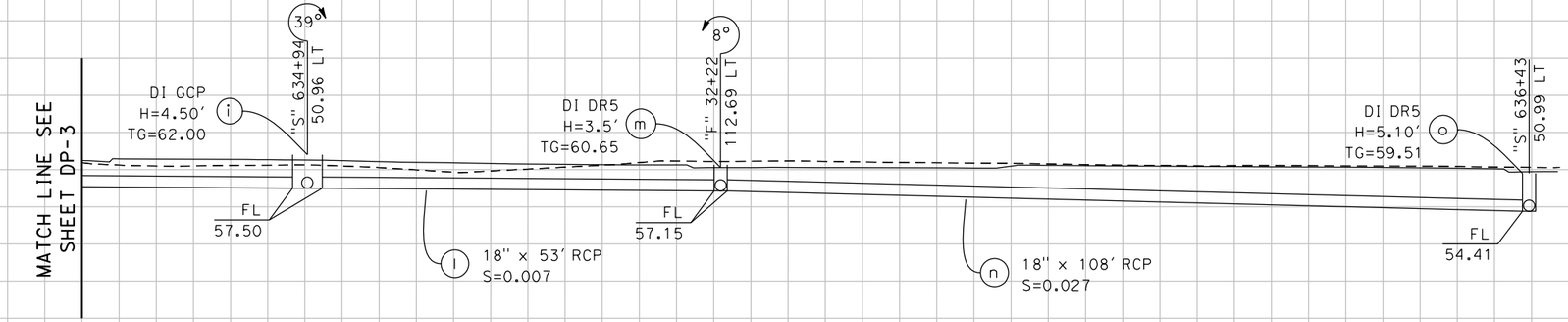

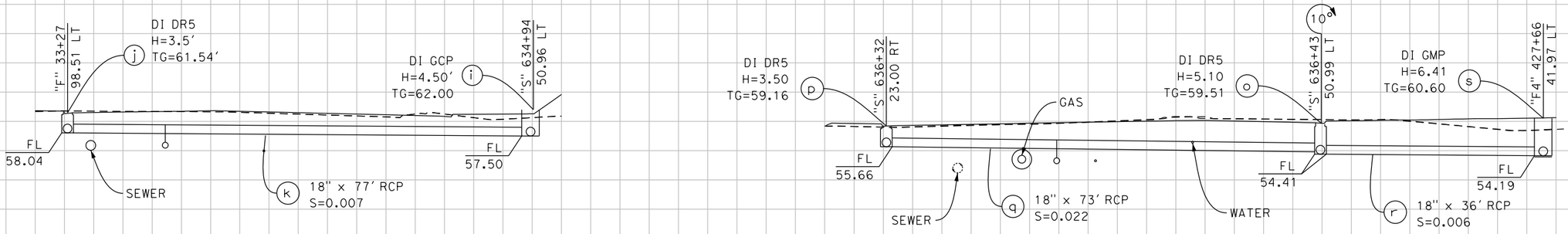

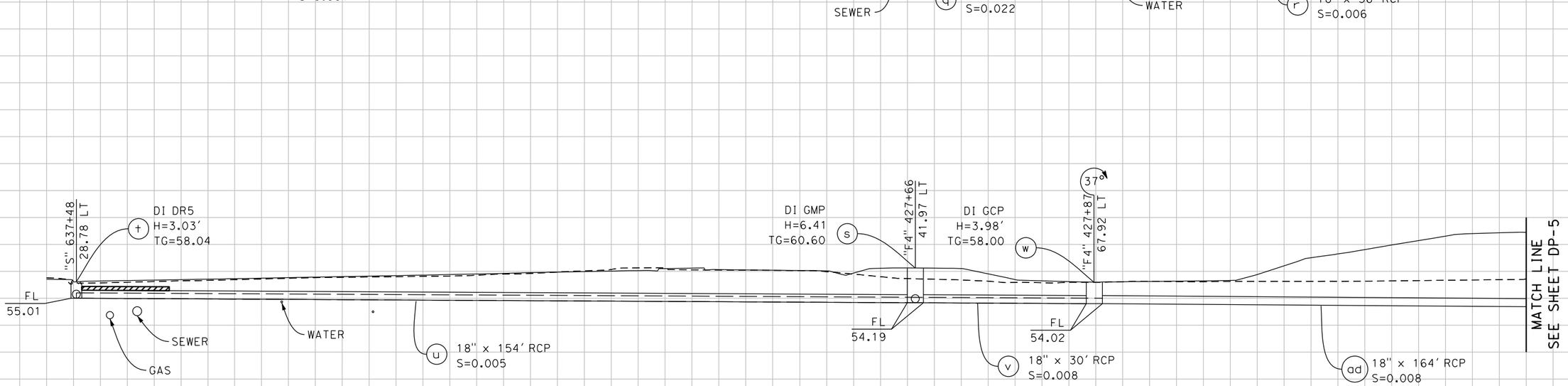

DRAINAGE SYSTEM No. 20

FOR REDUCED PLANS
ORIGINAL SCALE IS IN INCHES
0 1 2 3
ALL DIMENSIONS SHOWN IN FEET
UNLESS OTHERWISE NOTED

20 **DP-4**

PLAN SCALE: N/A
PROFILE SCALE: 1"=10'
HORIZ: 1"=10'
VERT: 1"=10'

CONTRACT NO: **17-XX**
DESIGNED: A. LEE
DRAWN: A. LEE
CHECKED:
RECORD DRAWING: DATE:

DOKKEN ENGINEERING
110 BLUE RAVINE ROAD #200
FOLSOM, CA 95630
PHONE: (916) 858-0642
FAX: (916) 858-0643

CITY OF **YUBA CITY**

5TH STREET BRIDGE REPLACEMENT
DRAINAGE PROFILE

SHEET NO.
OF
215

8/15/2016
...\511\1858tb004.dgn

REVISION #	DATE:	DESCRIPTION AND SHEET NO.:	APPROVED BY:	DATE:

REGISTERED PROFESSIONAL ENGINEER
AMANDA J. LEE
No. 84180
Exp. 9-30-17
CIVIL
STATE OF CALIFORNIA

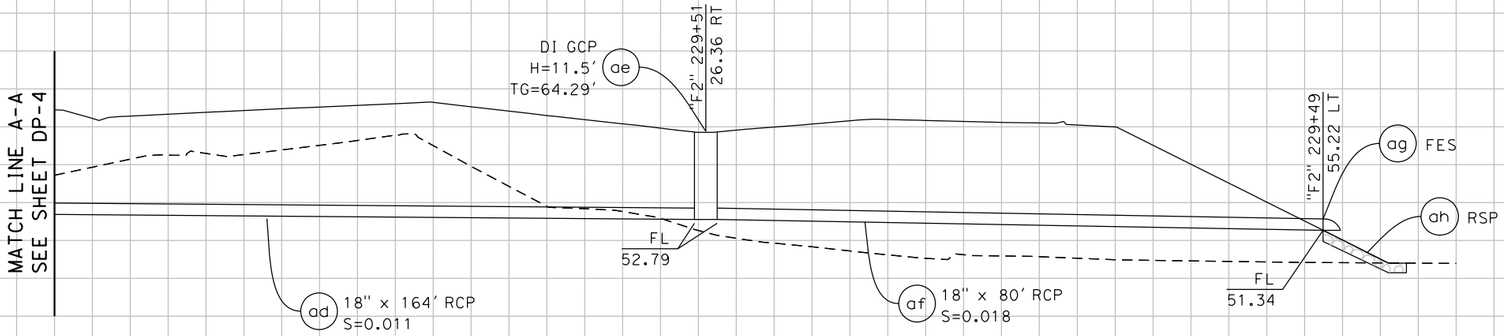

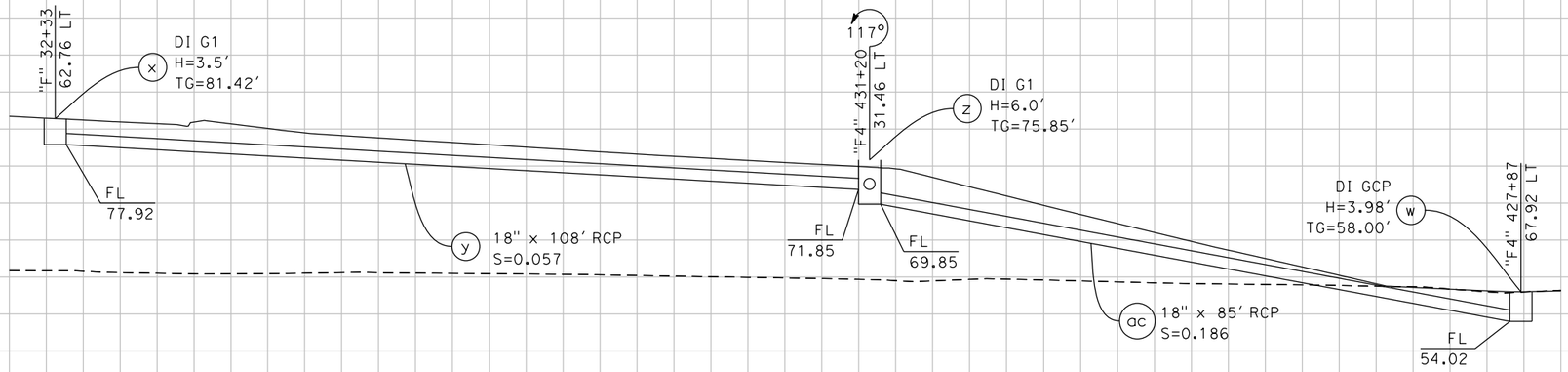

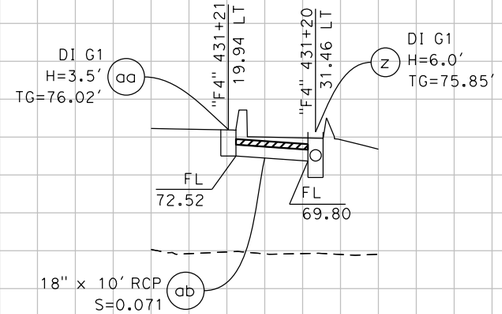

DRAINAGE SYSTEM No. 20

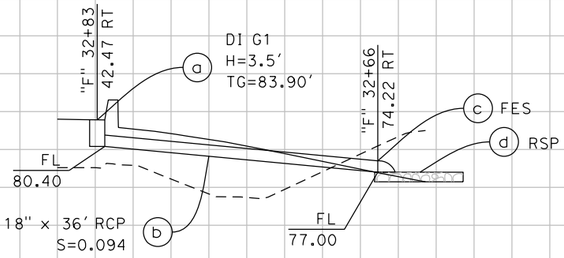

DRAINAGE SYSTEM No. 21

PLAN SCALE: N/A
PROFILE SCALE: 1"=10'
HORIZ: 1"=10'
VERT: 1"=10'

CONTRACT NO: 17-XX
DESIGNED: A. LEE
DRAWN: A. LEE
CHECKED:
RECORD DRAWING: DATE:

DOKKEN ENGINEERING
110 BLUE RAVINE ROAD #200
FOLSOM, CA 95630
PHONE: (916) 858-0642
FAX: (916) 858-0643

CITY OF YUBA CITY

5TH STREET BRIDGE REPLACEMENT
DRAINAGE PROFILE

SHEET NO.
OF 215

FOR REDUCED PLANS
ORIGINAL SCALE IS IN INCHES
0 1 2 3
ALL DIMENSIONS SHOWN IN FEET
UNLESS OTHERWISE NOTED

20 21 DP-5

8/15/2016
...\511\18581b005.dgn

REVISION #	DATE:	DESCRIPTION AND SHEET NO.:	APPROVED BY:	DATE:

REGISTERED PROFESSIONAL ENGINEER
AMANDA J. LEE
No. 84180
Exp. 9-30-17
CIVIL
STATE OF CALIFORNIA

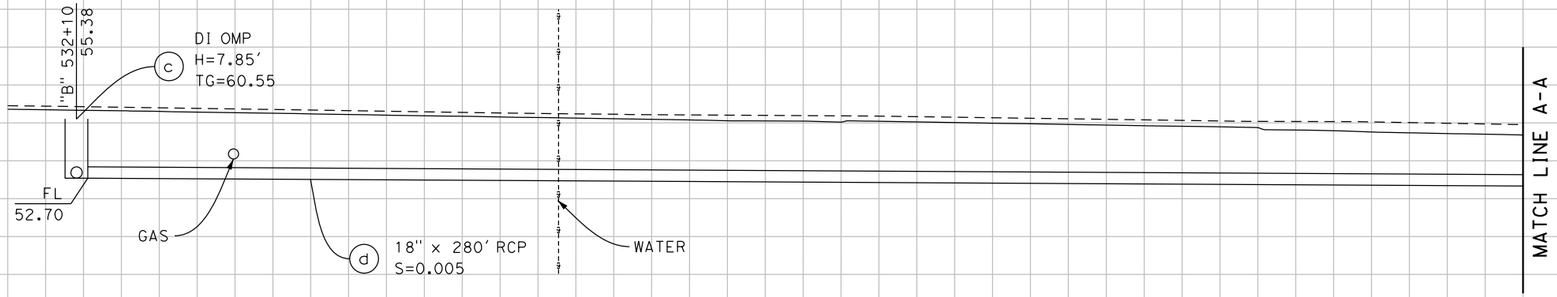

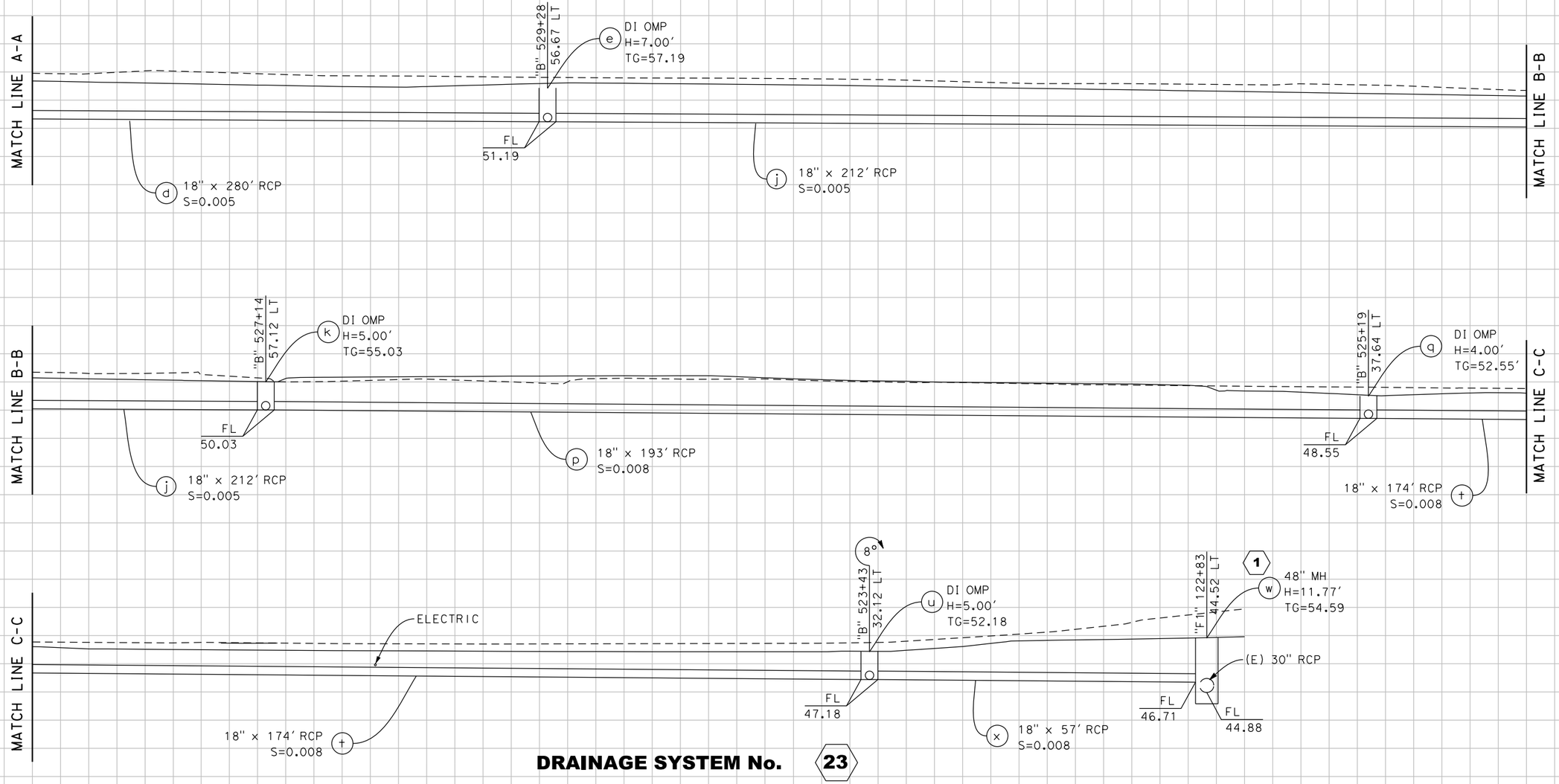

DRAINAGE SYSTEM No. 23

FOR REDUCED PLANS
ORIGINAL SCALE IS IN INCHES
0 1 2 3
ALL DIMENSIONS SHOWN IN FEET
UNLESS OTHERWISE NOTED

23 DP-6

PLAN SCALE: N/A
PROFILE SCALE: 1"=10'
HORIZ: 1"=10'
VERT: 1"=10'

CONTRACT NO: 17-XX
DESIGNED: A. LEE
DRAWN: A. LEE
CHECKED:
RECORD DRAWING: DATE:

DOKKEN ENGINEERING
110 BLUE RAVINE ROAD #200
FOLSOM, CA 95630
PHONE: (916) 858-0642
FAX: (916) 985-1845

CITY OF YUBA CITY

5TH STREET BRIDGE REPLACEMENT
DRAINAGE PROFILE

SHEET NO.
OF
215

8/15/2016
...\5111\8581b006.dgn

REVISION #	DATE:	DESCRIPTION AND SHEET NO.:	APPROVED BY:	DATE:

REGISTERED PROFESSIONAL ENGINEER
AMANDA J. LEE
No. 84180
Exp. 9-30-17
CIVIL
STATE OF CALIFORNIA

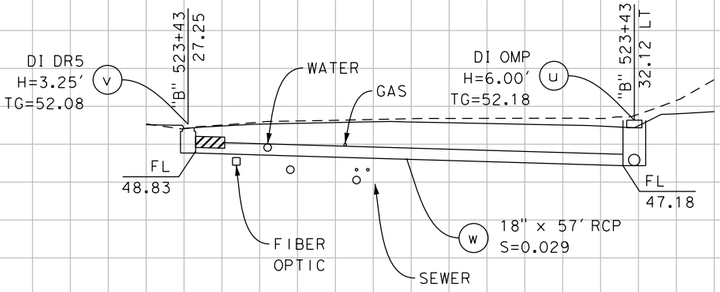

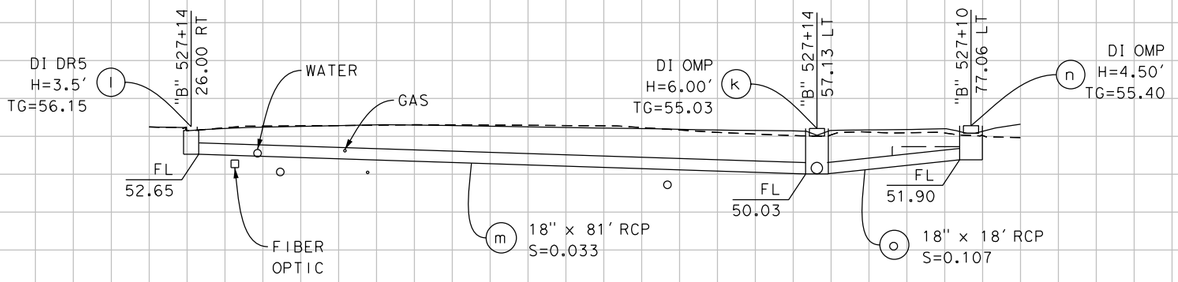

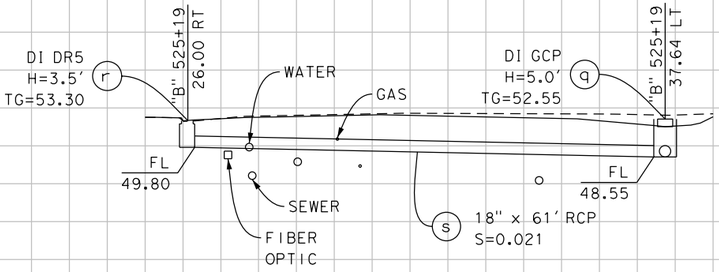

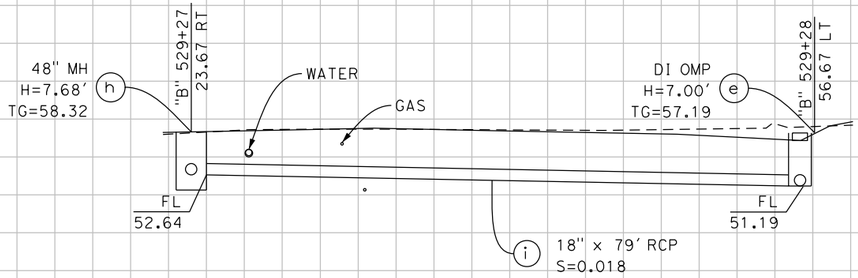

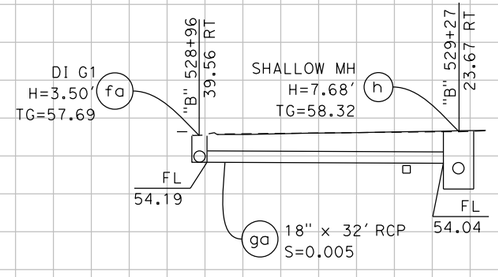

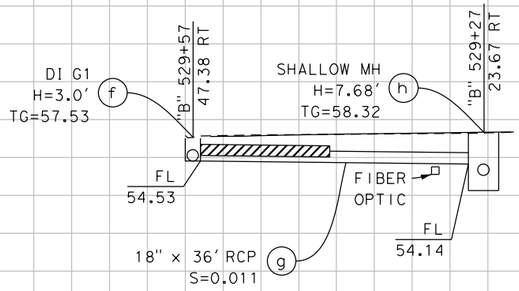

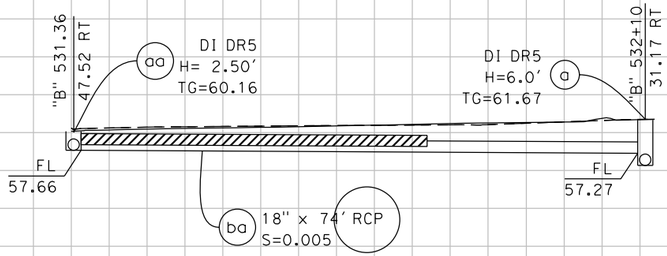

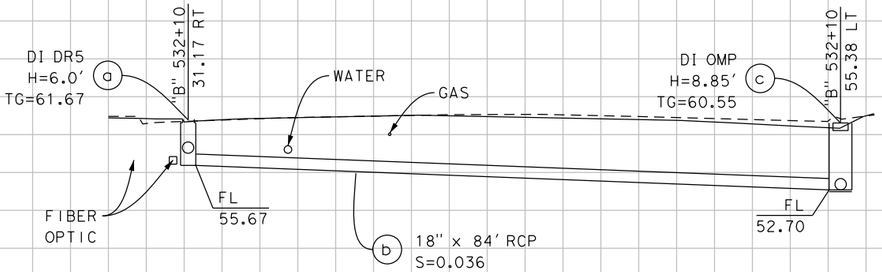

DRAINAGE SYSTEM No. 23

FOR REDUCED PLANS
ORIGINAL SCALE IS IN INCHES
0 1 2 3
ALL DIMENSIONS SHOWN IN FEET
UNLESS OTHERWISE NOTED

23 DP-7

PLAN SCALE: N/A
PROFILE SCALE: 1"=10'
HORIZ: 1"=10'
VERT: 1"=10'

CONTRACT NO: 17-XX
DESIGNED: A. LEE
DRAWN: A. LEE
CHECKED:
RECORD DRAWING: DATE:

DOKKEN ENGINEERING
110 BLUE RAVINE ROAD #200
FOLSOM, CA 95630
PHONE: (916) 858-0642
FAX: (916) 858-0643

CITY OF YUBA CITY

5TH STREET BRIDGE REPLACEMENT
DRAINAGE PROFILE

SHEET NO.
OF
215

8/15/2016
...\511\18581D007.dgn

REVISION #	DATE:	DESCRIPTION AND SHEET NO.:	APPROVED BY:	DATE:

REGISTERED PROFESSIONAL ENGINEER
AMANDA J. LEE
No. 84180
Exp. 9-30-17
CIVIL
STATE OF CALIFORNIA

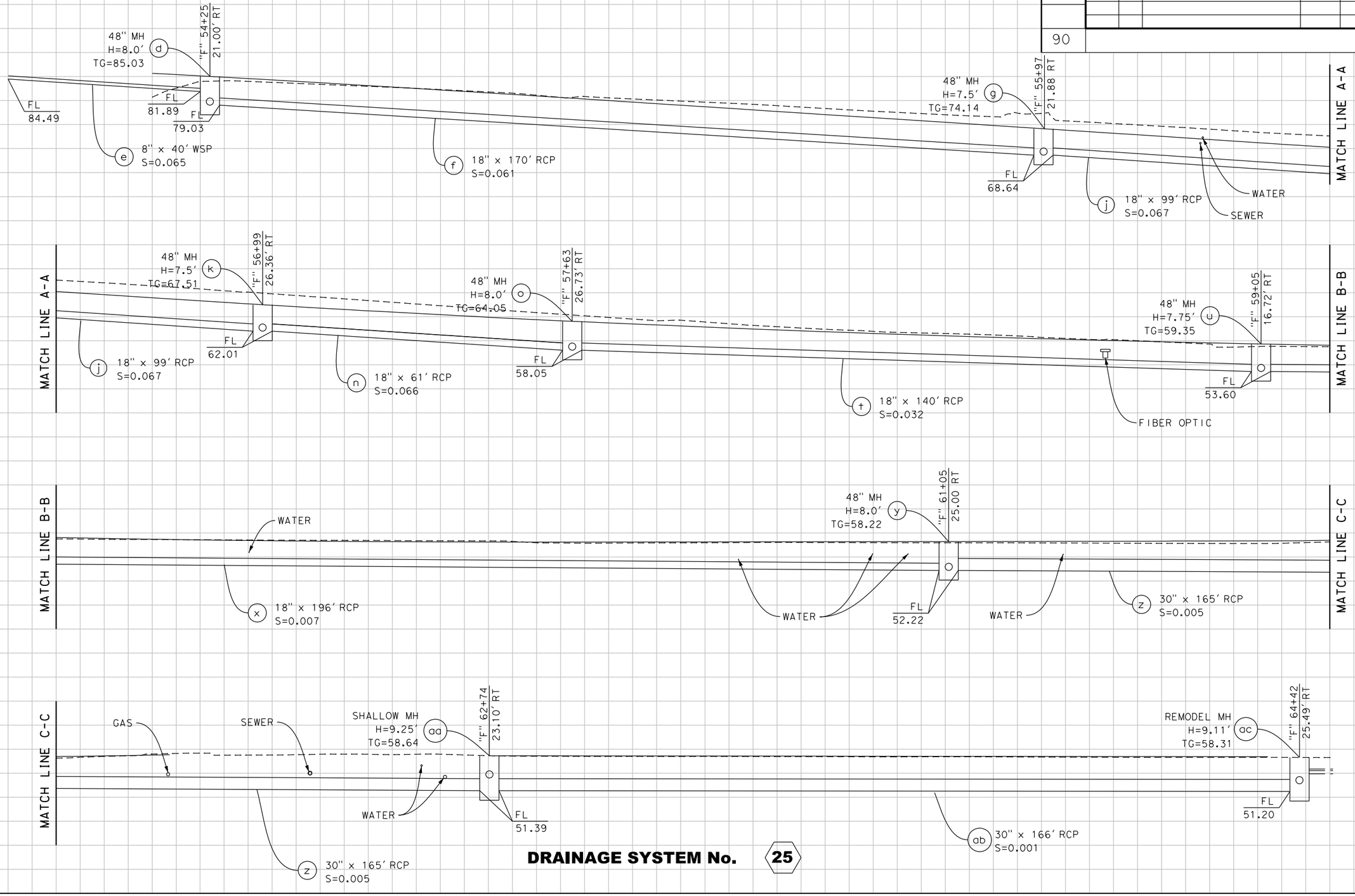

DRAINAGE SYSTEM No. 25

FOR REDUCED PLANS
ORIGINAL SCALE IS IN INCHES
0 1 2 3
ALL DIMENSIONS SHOWN IN FEET
UNLESS OTHERWISE NOTED

25 **DP-8**

PLAN SCALE: N/A
PROFILE SCALE: 1"=10'
HORIZ: 1"=10'
VERT: 1"=10'

CONTRACT NO: **17-XX**
DESIGNED: A. LEE
DRAWN: A. LEE
CHECKED:
RECORD DRAWING: DATE:

DOKKEN ENGINEERING
110 BLUE RAVINE ROAD #200
FOLSOM, CA 95630
PHONE: (916) 858-0642
FAX: (916) 985-1845

CITY OF **YUBA CITY**

5TH STREET BRIDGE REPLACEMENT
DRAINAGE PROFILE

SHEET NO.
OF **215**

8/15/2016
...\511\18581b008.dgn

REVISION #	DATE:	DESCRIPTION AND SHEET NO.:	APPROVED BY:	DATE:

REGISTERED PROFESSIONAL ENGINEER
AMANDA J. LEE
No. 84180
Exp. 9-30-17
CIVIL
STATE OF CALIFORNIA

PLAN SCALE: N/A
PROFILE SCALE: 1"=10'
HORIZ: 1"=10'
VERT: 1"=10'

CONTRACT NO: 17-XX
DESIGNED: A. LEE
DRAWN: A. LEE
CHECKED:
RECORD DRAWING: DATE:

DOKKEN ENGINEERING
110 BLUE RAVINE ROAD #200
FOLSOM, CA 95630
PHONE: (916) 858-0642
FAX: (916) 985-1845

CITY OF YUBA CITY

5TH STREET BRIDGE REPLACEMENT
DRAINAGE PROFILE

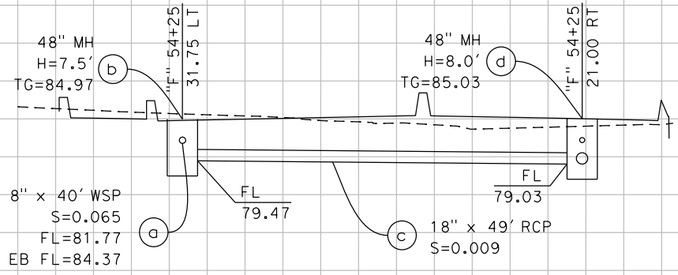

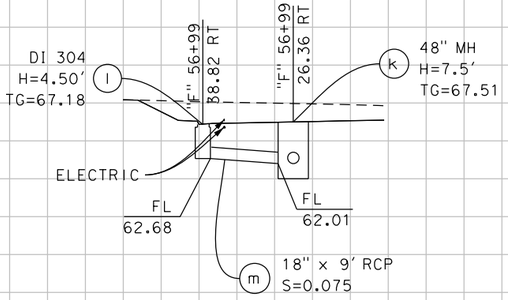

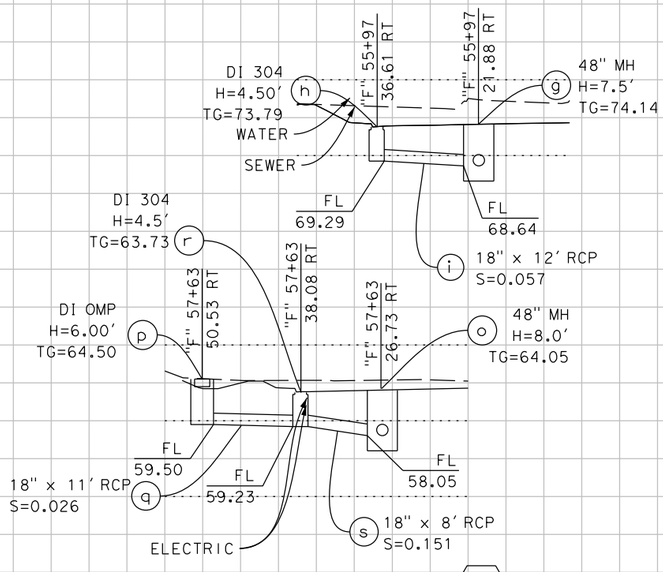

DRAINAGE SYSTEM No. 25

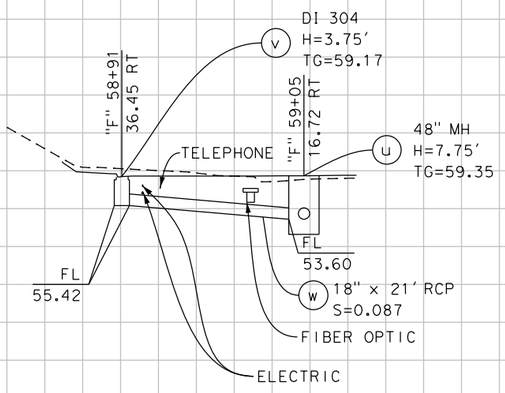

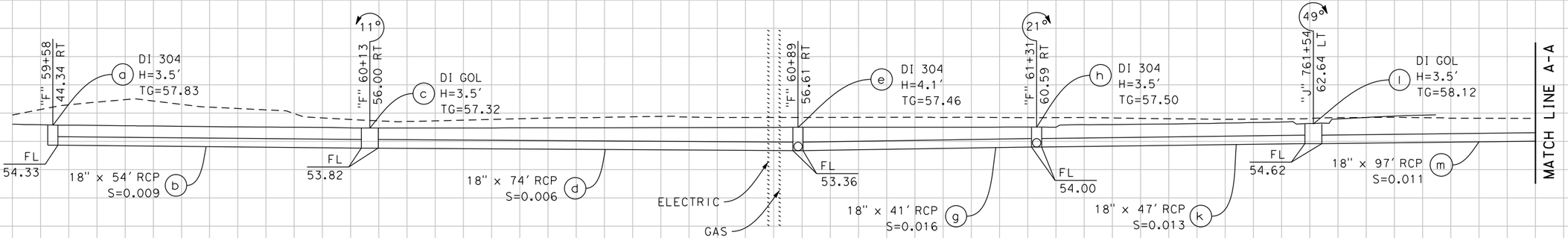

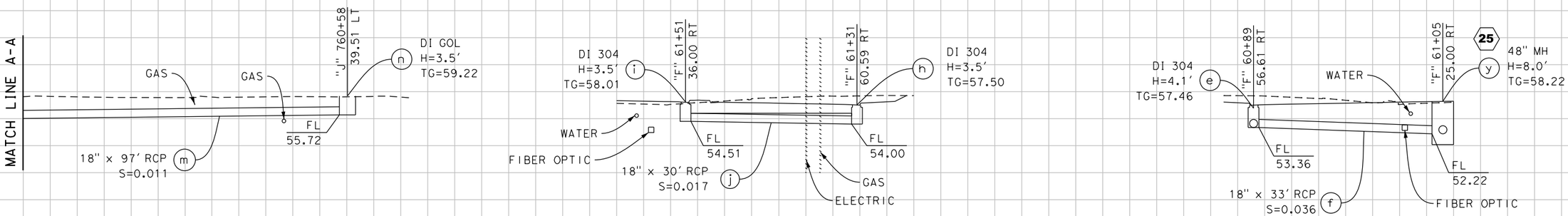

DRAINAGE SYSTEM No. 26

FOR REDUCED PLANS
ORIGINAL SCALE IS IN INCHES
0 1 2 3
ALL DIMENSIONS SHOWN IN FEET
UNLESS OTHERWISE NOTED

25 26 **DP-9**

SHEET NO.
OF
215

8/15/2016
...\511\18581b009.dgn

REVISION #	DATE:	DESCRIPTION AND SHEET NO.:	APPROVED BY:	DATE:

REGISTERED PROFESSIONAL ENGINEER
AMANDA J. LEE
No. 84180
Exp. 9-30-17
CIVIL
STATE OF CALIFORNIA

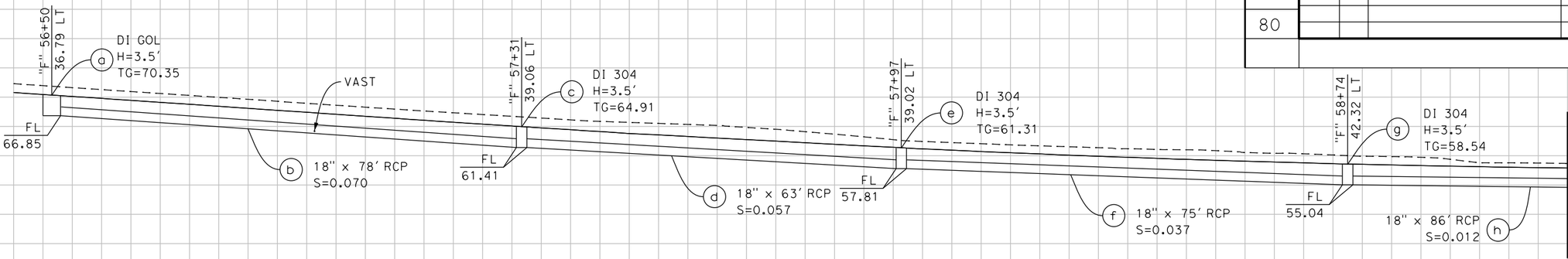

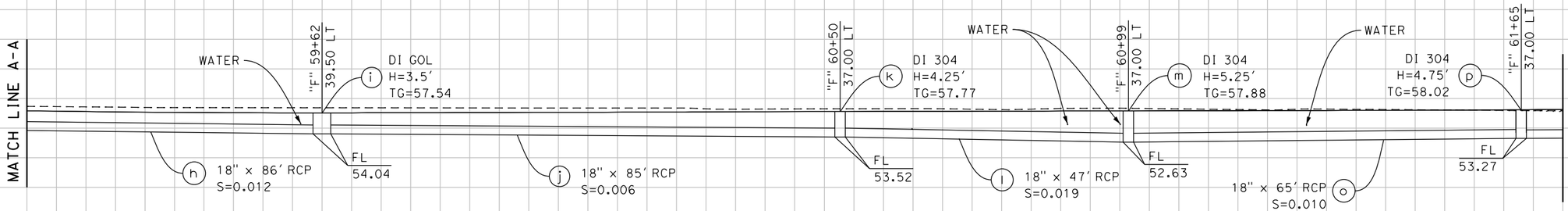

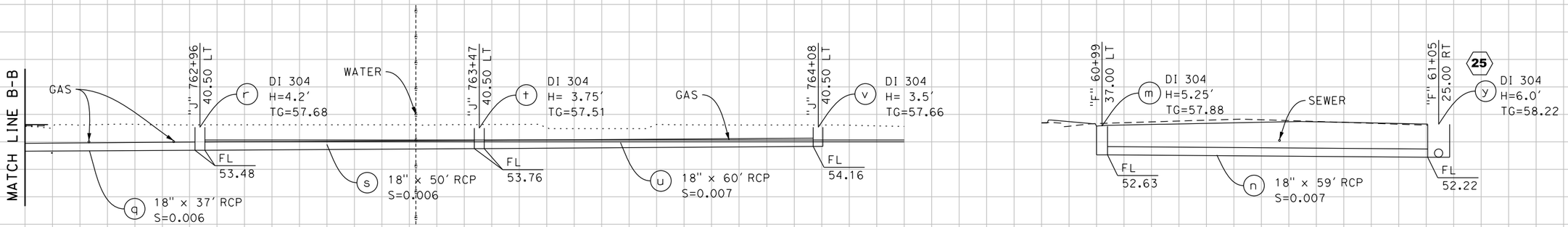

DRAINAGE SYSTEM No. 27

FOR REDUCED PLANS
ORIGINAL SCALE IS IN INCHES
0 1 2 3
ALL DIMENSIONS SHOWN IN FEET
UNLESS OTHERWISE NOTED

27 DP-10

PLAN SCALE: N/A
PROFILE SCALE: 1"=10'
HORIZ: 1"=10'
VERT: 1"=10'

CONTRACT NO: 17-XX
DESIGNED: A. LEE
DRAWN: A. LEE
CHECKED:
RECORD DRAWING:
DATE:

DOKKEN ENGINEERING
110 BLUE RAVINE ROAD #200
FOLSOM, CA 95630
PHONE: (916) 858-0642
FAX: (916) 858-0643

CITY OF YUBA CITY

5TH STREET BRIDGE REPLACEMENT
DRAINAGE PROFILE

SHEET NO.
OF
215

8/15/2016
...\511\18581D010.dgn

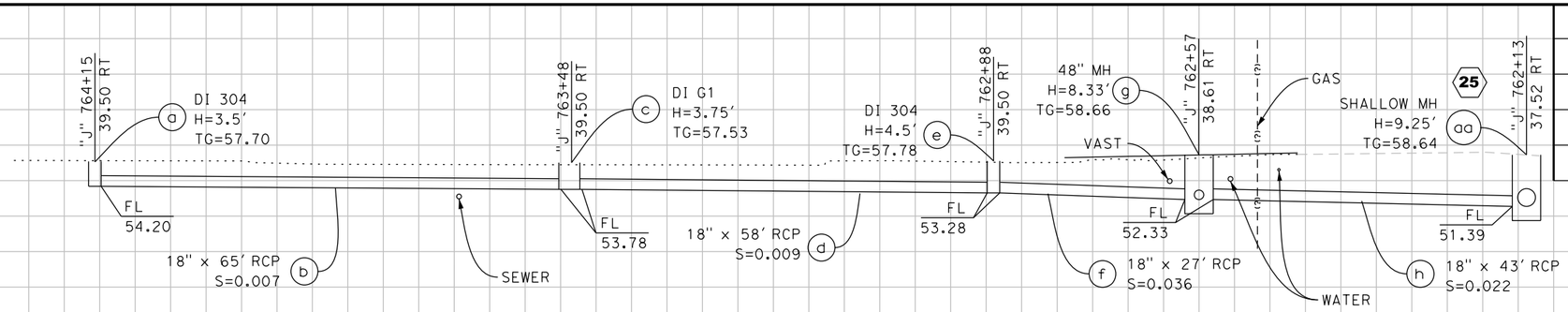

DRAINAGE SYSTEM No. 28

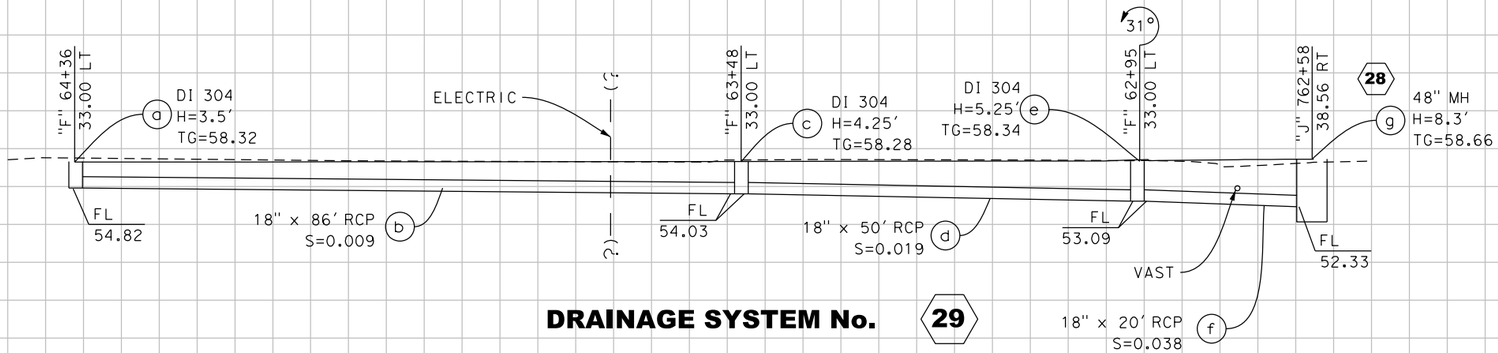

DRAINAGE SYSTEM No. 29

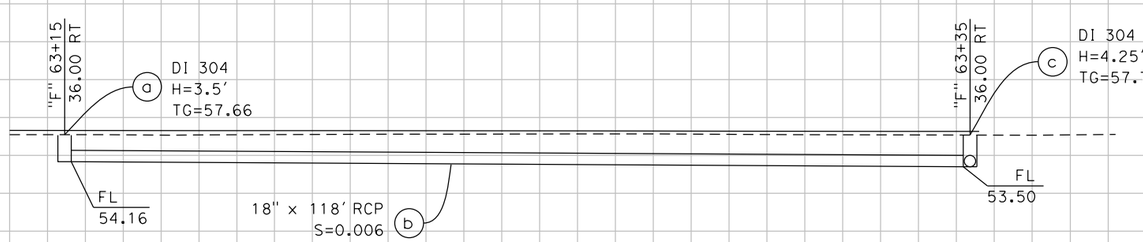

DRAINAGE SYSTEM No. 31

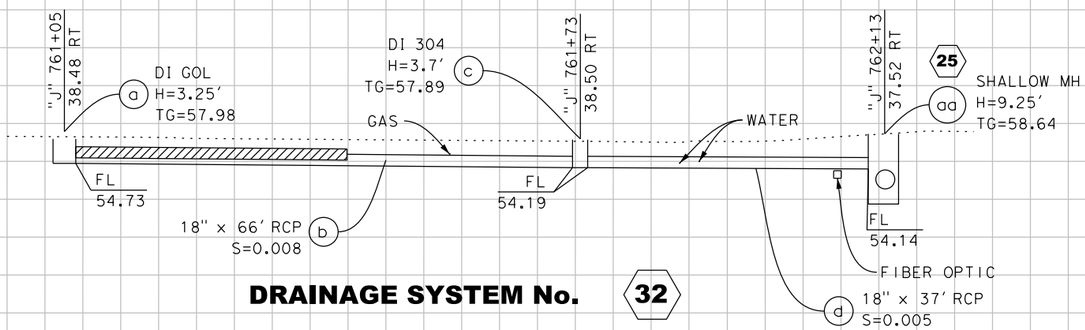

DRAINAGE SYSTEM No. 32

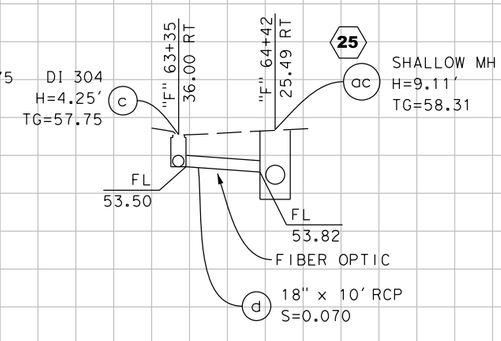

REVISION #	DATE:	DESCRIPTION AND SHEET NO.:	APPROVED BY:	DATE:

REGISTERED PROFESSIONAL ENGINEER
AMANDA J. LEE
No. 84180
Exp. 9-30-17
CIVIL
STATE OF CALIFORNIA

PLAN SCALE: N/A
PROFILE SCALE: 1"=10'
HORIZ: 1"=10'
VERT: 1"=10'

CONTRACT NO: 17-XX
DESIGNED: A. LEE
DRAWN: A. LEE
CHECKED:
RECORD DRAWING:
DATE:

DOKKEN ENGINEERING
110 BLUE RAVINE ROAD #200
FOLSOM, CA 95630
PHONE: (916) 858-0642
FAX: (916) 858-0643

CITY OF YUBA CITY

5TH STREET BRIDGE REPLACEMENT

DRAINAGE PROFILE

SHEET NO.
OF
215

FOR REDUCED PLANS
ORIGINAL SCALE IS IN INCHES
0 1 2 3
ALL DIMENSIONS SHOWN IN FEET
UNLESS OTHERWISE NOTED

28 29 31 32

DP-11

8/15/2016

...\5111\8581b011.dgn

REVISION #	DATE:	DESCRIPTION AND SHEET NO.:	APPROVED BY:	DATE:

REGISTERED PROFESSIONAL ENGINEER
AMANDA J. LEE
No. 84180
Exp. 9-30-17
CIVIL
STATE OF CALIFORNIA

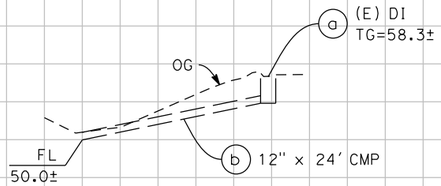

DRAINAGE SYSTEM No. 5

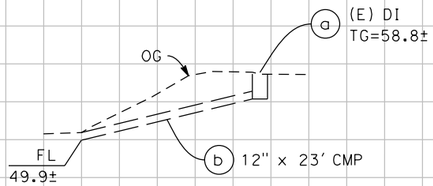

DRAINAGE SYSTEM No. 6

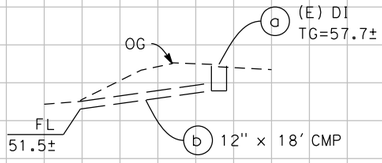

DRAINAGE SYSTEM No. 10

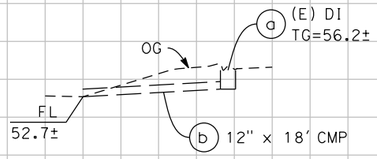

DRAINAGE SYSTEM No. 11

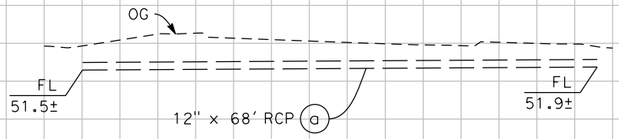

DRAINAGE SYSTEM No. 12

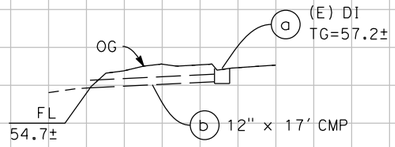

DRAINAGE SYSTEM No. 13

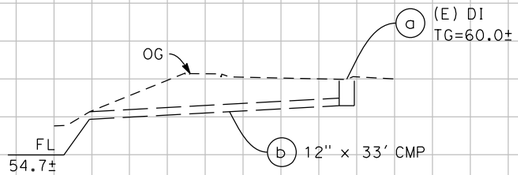

DRAINAGE SYSTEM No. 14

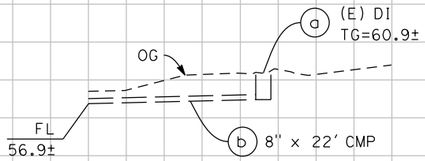

DRAINAGE SYSTEM No. 15

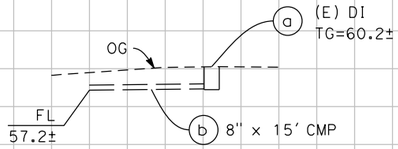

DRAINAGE SYSTEM No. 16

FOR REDUCED PLANS
ORIGINAL SCALE IS IN INCHES
0 1 2 3
ALL DIMENSIONS SHOWN IN FEET
UNLESS OTHERWISE NOTED

REMOVALS

DP-12

PLAN SCALE: N/A
PROFILE SCALE: 1"=10'
HORIZ. 1"=10'
VERT: 1"=10'

CONTRACT NO: 17-XX
DESIGNED: A. LEE
DRAWN: A. LEE
CHECKED:
RECORD DRAWING: DATE:

DOKKEN ENGINEERING
110 BLUE RAVINE ROAD #200
FOLSOM, CA 95630
PHONE: (916) 858-0642
FAX: (916) 985-1845

CITY OF YUBA CITY

5TH STREET BRIDGE REPLACEMENT
DRAINAGE PROFILE

SHEET NO.
OF
215

8/15/2016
...\5111858tb012.dgn

REVISION #	DATE:	DESCRIPTION AND SHEET NO.:	APPROVED BY:	DATE:

REGISTERED PROFESSIONAL ENGINEER
AMANDA J. LEE
No. 84180
Exp. 9-30-17
CIVIL
STATE OF CALIFORNIA

PLAN SCALE: N/A
PROFILE SCALE: 1"=10'
HORIZ: 1"=10'
VERT: 1"=10'

CONTRACT NO: 17-XX
DESIGNED: A. LEE
DRAWN: A. LEE
CHECKED:
RECORD DRAWING: DATE:

DOKKEN ENGINEERING
110 BLUE RAVINE ROAD #200
FOLSOM, CA 95630
PHONE: (916) 858-0642
FAX: (916) 858-0643

CITY OF YUBA CITY

5TH STREET BRIDGE REPLACEMENT
DRAINAGE PROFILE

SHEET NO.
OF
215

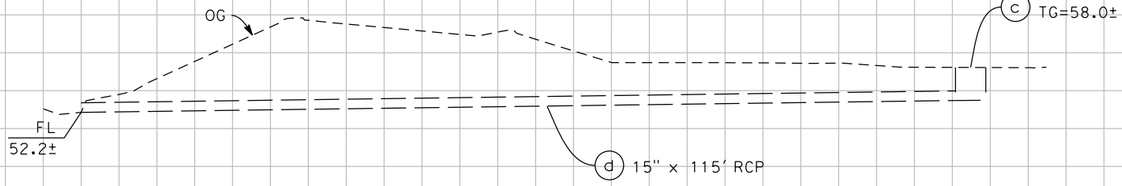

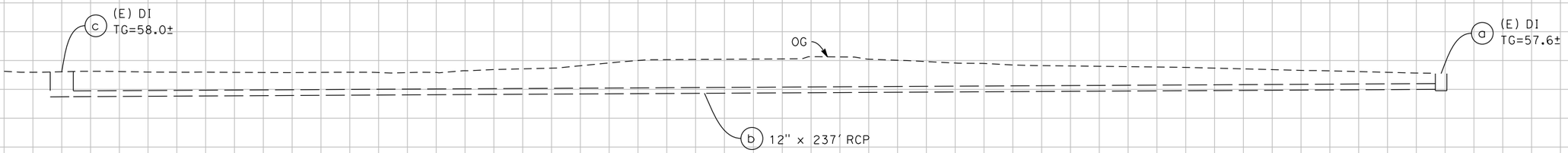

DRAINAGE SYSTEM No. 17

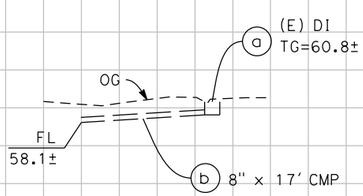

DRAINAGE SYSTEM No. 18

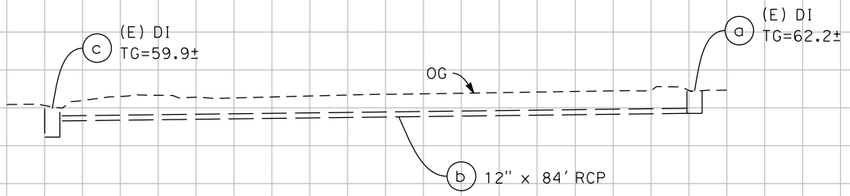

DRAINAGE SYSTEM No. 19

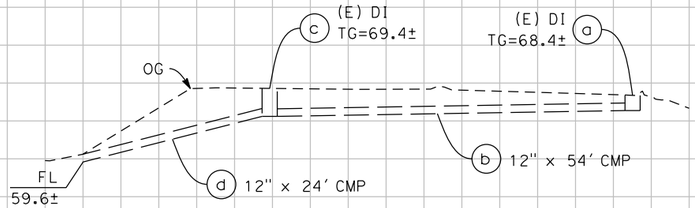

DRAINAGE SYSTEM No. 22

FOR REDUCED PLANS ORIGINAL SCALE IS IN INCHES 0 1 2 3

ALL DIMENSIONS SHOWN IN FEET UNLESS OTHERWISE NOTED

REMOVALS

DP-13

8/15/2016

...\5111\8581b013.dgn

REVISION #	DATE:	DESCRIPTION AND SHEET NO.:	APPROVED BY:	DATE:

REGISTERED PROFESSIONAL ENGINEER
AMANDA J. LEE
No. 84180
Exp. 9-30-17
CIVIL
STATE OF CALIFORNIA

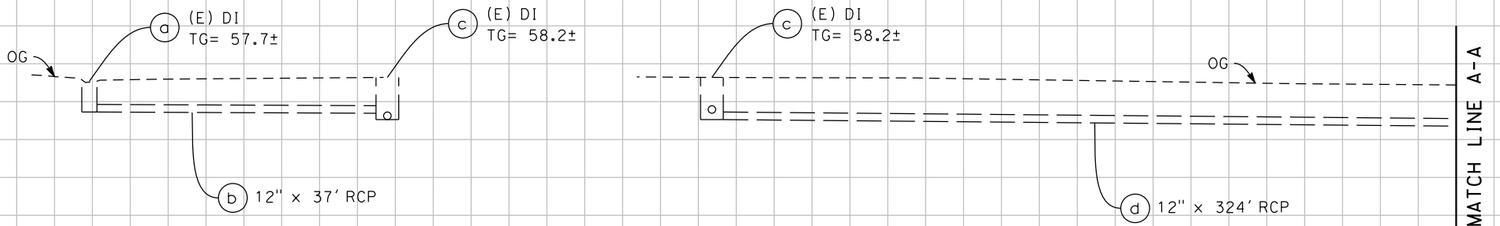

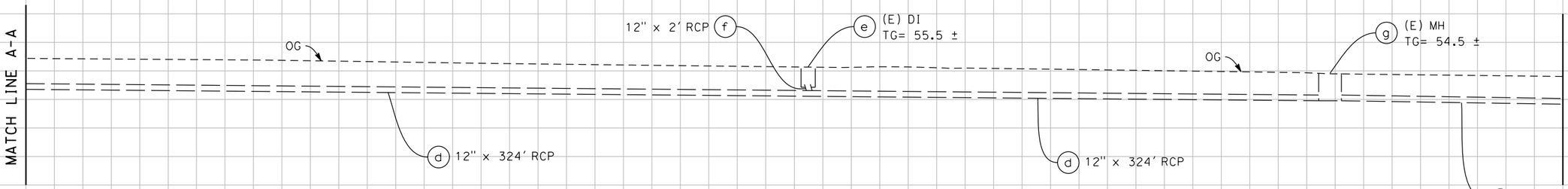

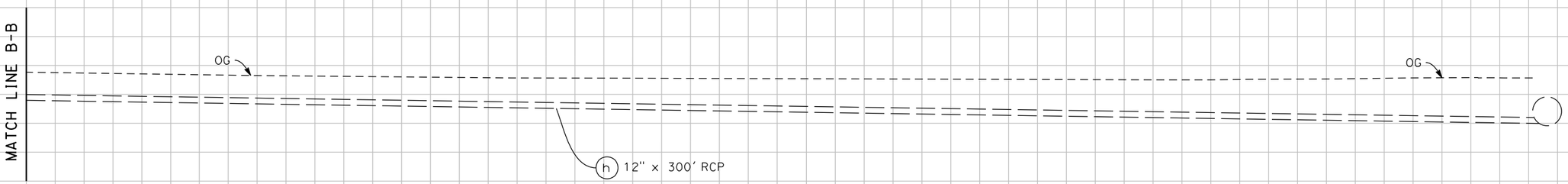

DRAINAGE SYSTEM No. 24

FOR REDUCED PLANS
ORIGINAL SCALE IS IN INCHES
0 1 2 3
ALL DIMENSIONS SHOWN IN FEET
UNLESS OTHERWISE NOTED

REMOVALS

DP-14

PLAN SCALE: N/A
PROFILE SCALE: 1"=10'
HORIZ: 1"=10'
VERT: 1"=10'

CONTRACT NO: 17-XX
DESIGNED: A. LEE
DRAWN: A. LEE
CHECKED:
RECORD DRAWING: DATE:

DOKKEN ENGINEERING
110 BLUE RAVINE ROAD #200
FOLSOM, CA 95630
PHONE: (916) 858-0642
FAX: (916) 985-1845

CITY OF YUBA CITY

5TH STREET BRIDGE REPLACEMENT
DRAINAGE PROFILE

SHEET NO.
OF
215

8/15/2016
...\5111858tb014.dgn

REVISION #	DATE:	DESCRIPTION AND SHEET NO.:	APPROVED BY:	DATE:

REGISTERED PROFESSIONAL ENGINEER
AMANDA J. LEE
No. 84180
Exp. 9-30-17
CIVIL
STATE OF CALIFORNIA

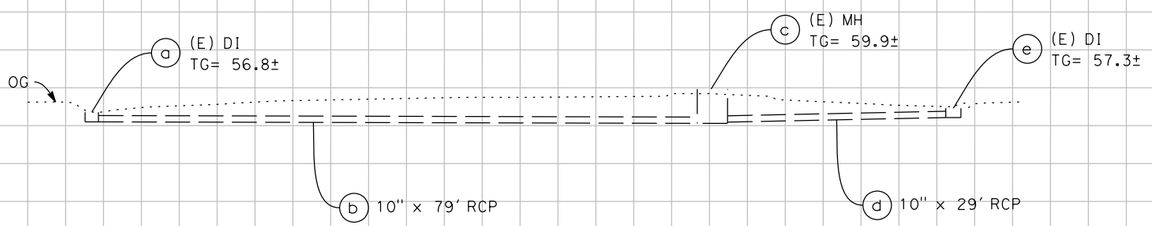

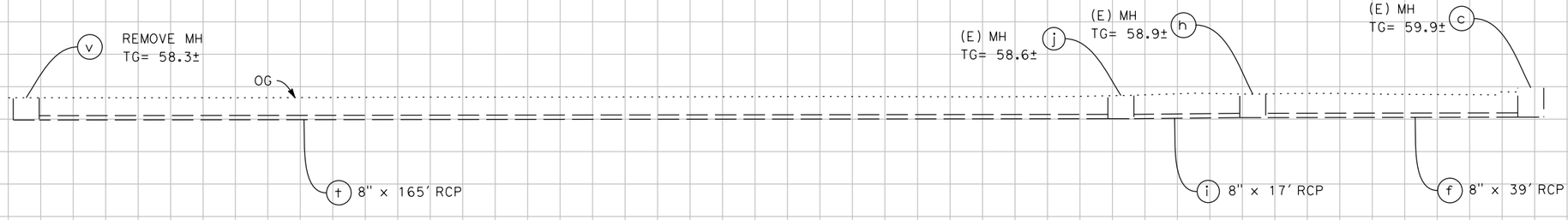

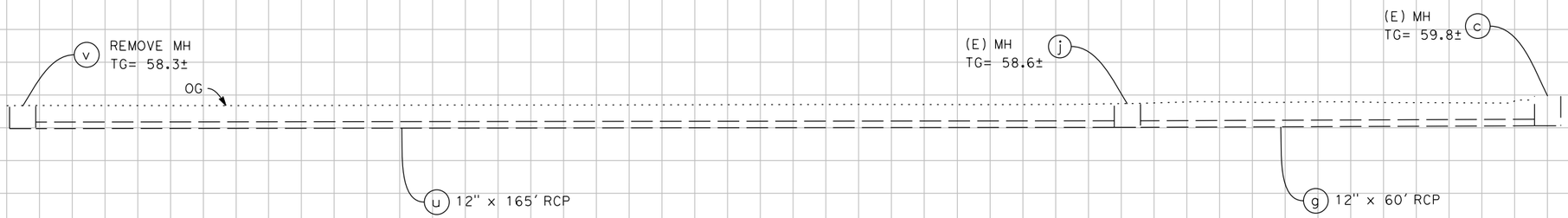

DRAINAGE SYSTEM No. 33

FOR REDUCED PLANS
ORIGINAL SCALE IS IN INCHES
0 1 2 3
ALL DIMENSIONS SHOWN IN FEET
UNLESS OTHERWISE NOTED

REMOVALS

DP-15

PLAN SCALE: N/A
PROFILE SCALE: 1"=10'
HORIZ. 1"=10'
VERT: 1"=10'

CONTRACT NO: 17-XX
DESIGNED: A. LEE
DRAWN: A. LEE
CHECKED:
RECORD DRAWING: DATE:

DOKKEN ENGINEERING
110 BLUE RAVINE ROAD #200
FOLSOM, CA 95630
PHONE: (916) 858-0642
FAX: (916) 985-1845

CITY OF YUBA CITY

5TH STREET BRIDGE REPLACEMENT
DRAINAGE PROFILE

SHEET NO.
OF
215

8/15/2016
...\511\18581D015.dgn

REVISION #	DATE:	DESCRIPTION AND SHEET NO.'s	APPROVED BY:	DATE:

REGISTERED PROFESSIONAL ENGINEER
AMANDA J. LEE
No. 84180
Exp. 9-30-17
CIVIL
STATE OF CALIFORNIA

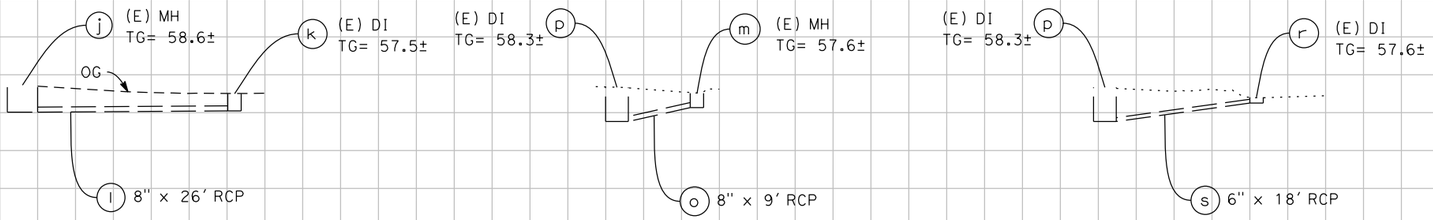

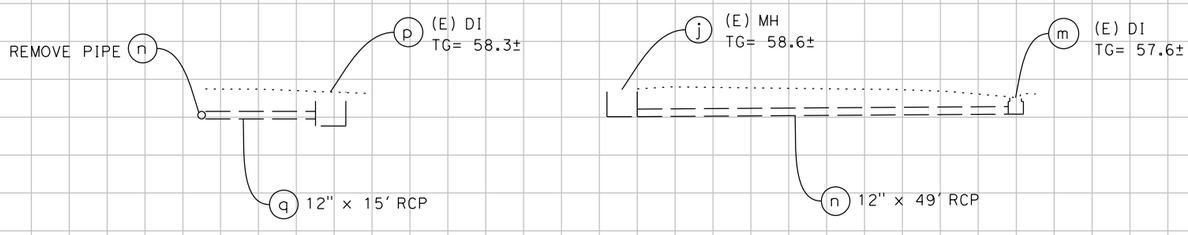

DRAINAGE SYSTEM No. 33

DRAINAGE SYSTEM No. 30

PLAN SCALE: N/A
PROFILE SCALE: 1"=10'
HORIZ: 1"=10'
VERT: 1"=10'

CONTRACT NO: 17-XX
DESIGNED: A. LEE
DRAWN: A. LEE
CHECKED:
RECORD DRAWING: DATE:

DOKKEN ENGINEERING
110 BLUE RAVINE ROAD #200
FOLSOM, CA 95630
PHONE: (916) 858-0642
FAX: (916) 985-1845

CITY OF YUBA CITY

5TH STREET BRIDGE REPLACEMENT

DRAINAGE PROFILE

SHEET NO.
OF
215

FOR REDUCED PLANS
ORIGINAL SCALE IS IN INCHES
0 1 2 3
ALL DIMENSIONS SHOWN IN FEET
UNLESS OTHERWISE NOTED

REMOVALS

DP-16

8/15/2016

...\511\18581D016.dgn

REVISION #	DATE	DESCRIPTION AND SHEET NO.	APPROVED BY	DATE

REGISTERED PROFESSIONAL ENGINEER
AMANDA J. LEE
No. 84180
Exp. 9-30-17
CIVIL
STATE OF CALIFORNIA

PLAN SCALE: 1"=10'
PROFILE SCALE: N/A
HORIZ:
VERT:

CONTRACT NO: 17-XX
DESIGNED: A. LEE
DRAWN: A. LEE
CHECKED:
RECORD DRAWING:
DATE:

DOKKEN ENGINEERING
110 BLUE RAVINE ROAD #200
FOLSOM, CA 95630
PHONE: (916) 858-0642
FAX: (916) 858-0643

CITY OF YUBA CITY

5TH STREET BRIDGE REPLACEMENT
DRAINAGE DETAILS

SHEET NO.
OF
215

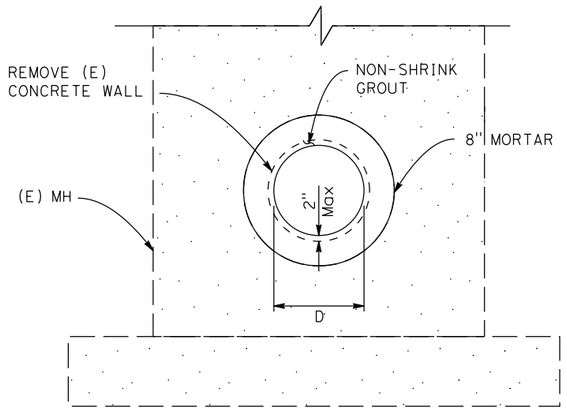

D= OUTSIDE PIPE DIAMETER

SECTION A-A
NO SCALE

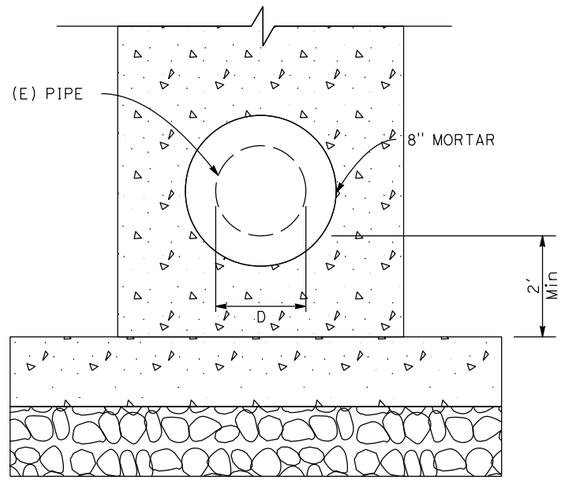

D= OUTSIDE PIPE DIAMETER

SECTION A-A
NO SCALE

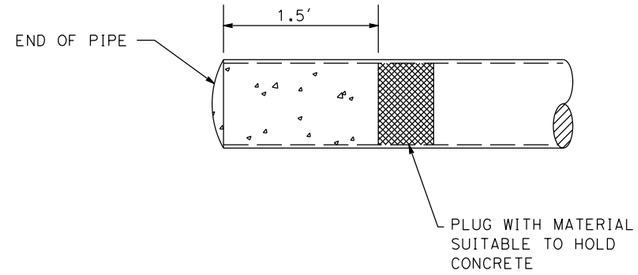

ABANDON STORM DRAIN PIPE

NO SCALE

24 h

FOR MH DETAILS NOT SHOWN, SEE CITY OF YUBA CITY STANDARD PLAN DRAWINGS

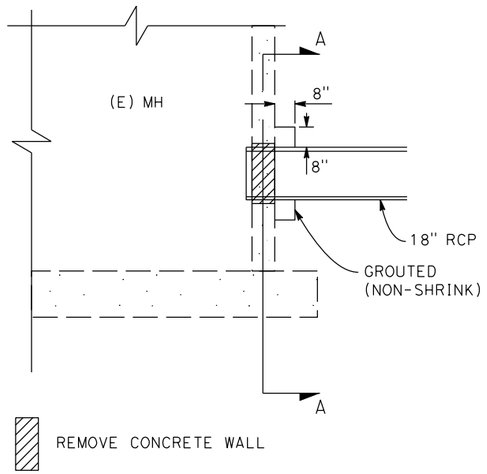

ELEVATION VIEW

REMODEL STORM DRAIN MANHOLE

NO SCALE

2 c 3 g

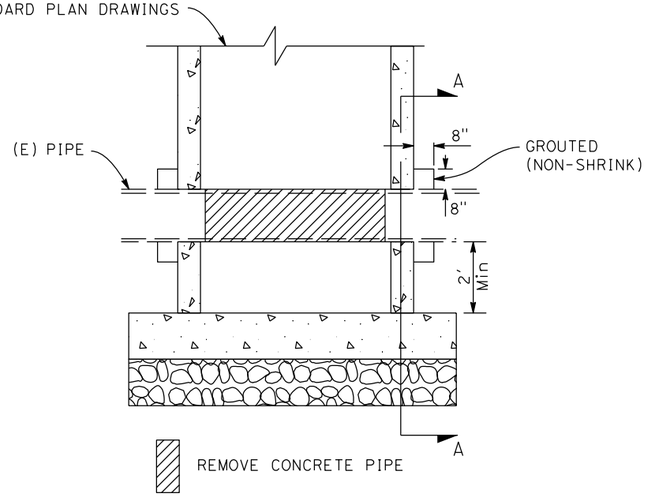

ELEVATION VIEW

STORM DRAIN MANHOLE AROUND (E) PIPE

NO SCALE

1 w 4 c

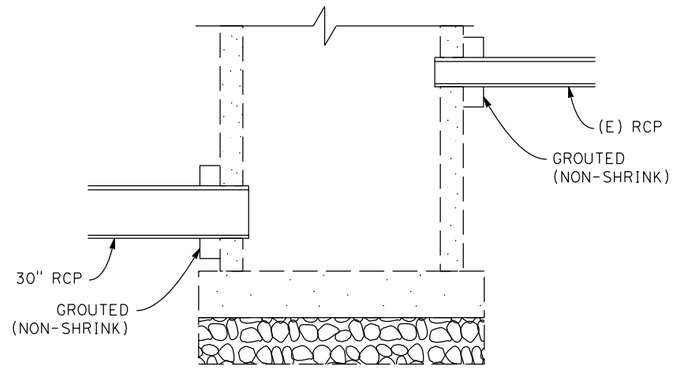

ELEVATION VIEW

PROPOSED MANHOLE - EXISTING PIPE CONNECTION

NO SCALE

25 ac

FOR REDUCED PLANS ORIGINAL SCALE IS IN INCHES
0 1 2 3
ALL DIMENSIONS SHOWN IN FEET UNLESS OTHERWISE NOTED

DD-1

8/15/2016
...\511\18581c001.dgn

REVISION #	DATE	DESCRIPTION AND SHEET NO.	APPROVED BY	DATE

REGISTERED PROFESSIONAL ENGINEER
AMANDA J. LEE
No. 84180
Exp. 9-30-17
CIVIL
STATE OF CALIFORNIA

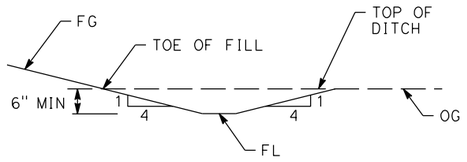

SECTION C-C

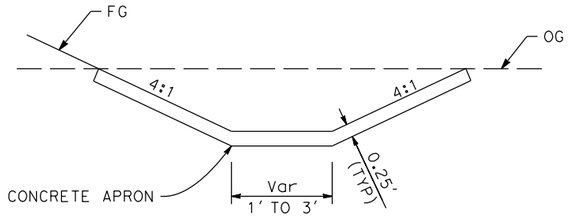

SECTION B-B

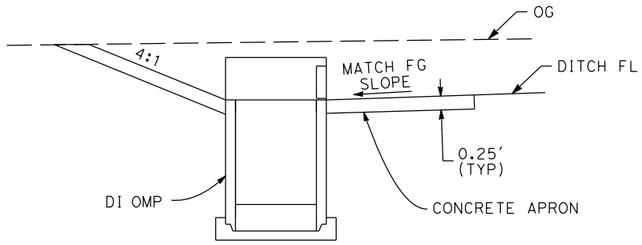

SECTION A-A

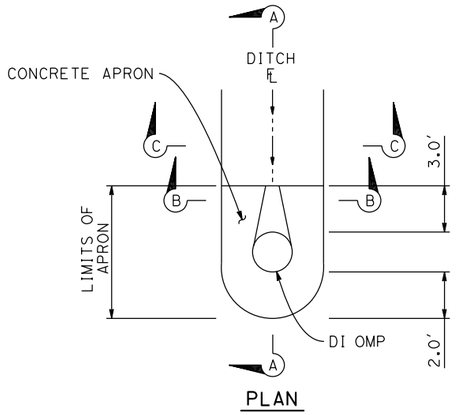

PLAN

DITCH AT DI OMP

NO SCALE

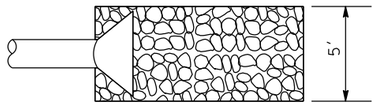

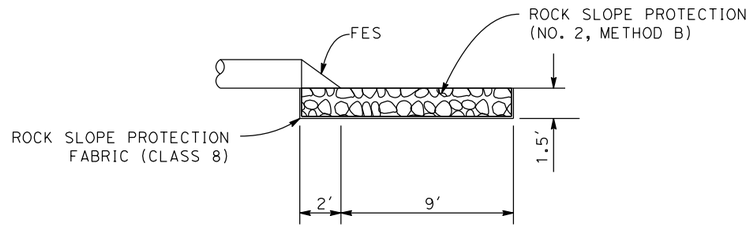

FLARED END SECTION WITH RSP DETAIL

NO SCALE

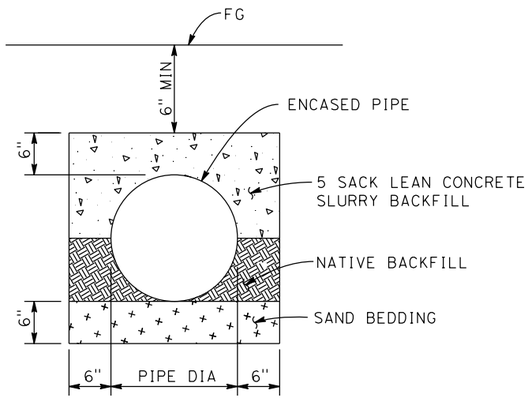

ENCASED RCP

NO SCALE

ALL RCP WITH LESS THAN 2 FT OF COVER MUST BE CONCRETE ENCASED

FOR REDUCED PLANS ORIGINAL SCALE IS IN INCHES 0 1 2 3

ALL DIMENSIONS SHOWN IN FEET UNLESS OTHERWISE NOTED

PLAN SCALE: 1"=10'
PROFILE SCALE: N/A
HORIZ:
VERT:

CONTRACT NO: 17-XX
DESIGNED: A. LEE
DRAWN: A. LEE
CHECKED:
RECORD DRAWING: DATE:

DOKKEN ENGINEERING
110 BLUE RAVINE ROAD #200
FOLSOM, CA 95630
PHONE: (916) 858-0642
FAX: (916) 858-0643

CITY OF YUBA CITY

5TH STREET BRIDGE REPLACEMENT

DRAINAGE DETAILS

SHEET NO.
OF
215

DD-1

8/15/2016

...\511\1858tc002.dgn

REVISION #	DATE:	DESCRIPTION AND SHEET NO.:	APPROVED BY:	DATE:

REGISTERED PROFESSIONAL ENGINEER
AMANDA J. LEE
No. 84180
Exp. 9-30-17
CIVIL
STATE OF CALIFORNIA

PLAN SCALE: N/A
PROFILE SCALE: N/A
HORIZ:
VERT:

CONTRACT NO: 17-XX
DESIGNED: A. LEE
DRAWN: A. LEE
CHECKED:
RECORD DRAWING:
DATE:

DOKKEN ENGINEERING
110 BLUE RAVINE ROAD 7200
FOLSOM, CA 95630
PHONE: (916) 858-0642
FAX: (916) 858-0643

CITY OF YUBA CITY

5TH STREET BRIDGE REPLACEMENT

DRAINAGE QUANTITIES

SHEET NO.
OF
215

DRAINAGE PLAN SHEET NO.	DRAINAGE SYSTEM NO.	DRAINAGE UNIT NO.	WELDED STEEL PIPE 8" LF	WELDED STEEL PIPE 10" LF	REINFORCED CONCRETE PIPE 18" LF	REINFORCED CONCRETE PIPE 30" LF	REINFORCED CONCRETE PIPE 24" RISER (DR5/304) LF	REINFORCED CONCRETE PIPE 36" RISER (OCP/GCP) LF	36" METAL PIPE RISER (OMP/GMP) LF	18" CONCRETE FLARED END SECTION EA	FRAME & COVER/LID DR5/304 GRATE (N) EA	FRAME & COVER/LID TYPE 24-12x GRATE (N) EA	FRAME & COVER/LID TYPE 36R GRATE (N) EA	FRAME & COVER/LID OMP LID (N) EA	FRAME & COVER/LID MANHOLE FRAME AND COVER (N) EA	INLET DR5/304 (N) EA	INLET DI GOL (N) EA	INLET DI G1 (N) EA	INLET DI GCP (N) EA	INLET DI OMP (N) EA	INLET DI GMP (N) EA	SHALLOW MANHOLE EA	48" MANHOLE EA	MINOR CONCRETE (MINOR STRUCTURE) CY	MINOR CONCRETE (BACKFILL) CY	MISC IRON & STEEL LBS	HEIGHT OF INLET/MANHOLE 'H' (N) FT	RSP NO. 2, METHOD B CY	RSP FABRIC (CLASS 8) SY	REMOVE INLET EA	REMOVE PIPE LF	REMODEL MANHOLE EA	REMOVE MANHOLE EA	ABANDON PIPE EA	DESCRIPTION	STATION	DRAINAGE UNIT NO.	DRAINAGE SYSTEM NO.
D-1	1	a					3.5				1					1											320	2.75							DI DR5	"F" 17+87 34.00 RT	a	1
		b			72																													18" X 72' RCP		b	
		c													1								1				270	7.5							48" MH	"F" 18+53 0.00 RT	c	
		d					3.25				1					1											320	3.25							DI DR5	"F" 18+51 34.19 RT	d	
		e			31																				0.5										18" X 31' RCP		e	
		f			96																														18" X 96' RCP		f	
		g													1								1				270	7.5							48" MH	"F" 19+52 0.26 LT	g	
		h					3.5				1					1											320	3.5							DI DR5	"F" 19+05 34.35 RT	h	
		i			56																														18" X 56' RCP		i	
		j					3.5				1					1											320	3.5							DI DR5	"F" 19+51 35.59 RT	j	
		k			33																														18" X 33' RCP		k	
		l			46																														18" X 46' RCP		l	
		m													1								1				270	7.5							48" MH	"F" 20+01 0.00 RT	m	
		n					3.5				1					1											320	3.5							DI DR5	"F" 20+00 42.19 RT	n	
		o			40																														18" X 40' RCP		o	
		p			99																														18" X 99' RCP		p	
		q													1								1				270	7.5							48" MH	"F" 21+03 0.00 RT	q	
		r			41																														18" X 41' RCP		r	
		s													1								1				270	7.5							48" MH	"F" 21+04 44.74 RT	s	
		t					3.5				1					1											320	3.5							DI DR5	"F" 20+97 75.08 RT	t	
		u			28																														18" X 28' RCP		u	
		v			175																														18" X 175' RCP		v	
		w													1								1				270	11.77							48" MH	"F" 22+81 57.72 RT	w	
D-1	2	a					3.5				1					1											320	3.5							DI DR5	"F" 18+30 35.98 LT	a	2
		b			40																														18" X 40' RCP		b	
		c																										7.41				1			REMODEL MANHOLE	"F" 18+74 41.50 LT	c	
		d			23																														18" X 23' RCP		d	
		e					3.5				1					1											320	3.5							DI DR5	"F" 19+00 35.88 LT	e	
D-1	3	a					3.5				1					1											320	3.5							DI DR5	"F" 20+00 36.50 LT	a	3
		b			145																														18" X 145' RCP		b	
		c					3.5				1					1											320	3.5							DI DR5	"F" 21+50 39.09 LT	c	
		d			153																														18" X 153' RCP		d	
		e					6.0				1					1											320	6.0							DI DR5	"F" 23+05 41.75 LT	e	
		f			24																														18" X 24' RCP		f	
		g																										9.06				1			REMODEL MANHOLE	"F" 23+05 67.54 LT	g	
D-1	4	a					2.5				1					1											320	2.5							DI DR5	'F1" 122+34 20.00RT	a	4
		b			11																														18" X 11' RCP		b	
		c													1							1					270	8.8							SHALLOW MANHOLE	'F1" 122+34 5.56 RT	c	
D-1	5	a																											1						DI	(REMOVE)	a	5
		b																												24					12" X 24' CMP	(REMOVE)	b	
D-1	6	a																											1						DI	(REMOVE)	a	6
		b																												23					12" X 23' CMP	(REMOVE)	b	
TOTAL SHEET DQ-1					1113		43.3				12				7	12						1	6		0.5	5730				2	47	2					

FOR REDUCED PLANS
ORIGINAL SCALE IS IN INCHES
0 1 2 3
ALL DIMENSIONS SHOWN IN FEET
UNLESS OTHERWISE NOTED

DQ-1

8/15/2016

...\511\1858\d001.dgn

REVISION #	DATE:	DESCRIPTION AND SHEET NO.:	APPROVED BY:	DATE:

REGISTERED PROFESSIONAL ENGINEER
AMANDA J. LEE
No. 84180
Exp. 9-30-17
CIVIL
STATE OF CALIFORNIA

PLAN SCALE: N/A
PROFILE SCALE: N/A
HORIZ:
VERT:

CONTRACT NO: **17-XX**
DESIGNED: A. LEE
DRAWN: A. LEE
CHECKED:
RECORD DRAWING: DATE:

DOKKEN ENGINEERING
110 BLUE RAVINE ROAD #200
FOLSOM, CA 95630
PHONE: (916) 858-0642
FAX: (916) 985-1865

CITY OF **YUBA CITY**

5TH STREET BRIDGE REPLACEMENT
DRAINAGE QUANTITIES

SHEET NO.
OF
215

DRAINAGE PLAN SHEET NO.	DRAINAGE SYSTEM NO.	DRAINAGE UNIT NO.	WELDED STEEL PIPE		REINFORCED CONCRETE PIPE				36" METAL PIPE RISER (OMP/GMP)	18" CONCRETE FLARED END SECTION	FRAME & COVER/LID					INLET						48" MANHOLE	SHALLOW MANHOLE	MINOR CONCRETE (MINOR STRUCTURE)	MINOR CONCRETE (BACKFILL)	MISC IRON & STEEL	HEIGHT OF INLET/MANHOLE 'H' (N)	RSP NO. 2, METHOD B	RSP FABRIC (CLASS 8)	REMOVE INLET	REMOVE PIPE	REMODEL MANHOLE	REMOVE MANHOLE	ABANDON PIPE	DESCRIPTION	STATION	DRAINAGE UNIT NO.	DRAINAGE SYSTEM NO.
			8"	10"	18"	30"	24" RISER (DR5/304)	36" RISER (OCP/GCP)			DR5/304 GRATE (N)	TYPE 24-12x GRATE (N)	TYPE 36R GRATE (N)	OMP LID (N)	MANHOLE FRAME AND COVER (N)	DR5/304 (N)	DI GOL (N)	DI G1 (N)	DI GCP (N)	DI OMP (N)	DI GMP (N)																		
			LF	LF	LF	LF	LF	LF	LF	EA	EA	EA	EA	EA	EA	EA	EA	EA	EA	EA	EA	EA	EA	CY	CY	LBS	FT	CY	SY	EA	LF	EA	EA	EA			
D-1	7	a										1					1							3.3		239	6								DI GOL-7	"F" 24+27 46.00 LT	a	7
		b			31																													18" X 31' RCP		b	
		c								1																								FES	"F" 24+26 77.75 LT	c	
		d																										4	2					RSP		d	
D-2	8	a					6				1					1									320	6								DI DR5	"F2" 225+51 20.00LT	a	8
		b			34																													18" X 34' RCP		b	
		c								1																								FES	"F2" 225+51 54.04LT	c	
		d																										4	2					RSP		d	
D-2	9	a									1					1									320									DI DR5	"F2" 227+04 20.00LT	a	9
		b			36																													18" X 36' RCP		b	
		c								1																								FES	"F2" 227+04 54.36LT	c	
		d																										4	2					RSP		d	
D-2	10	a																												1				DI	(REMOVAL)	a	10
		b																													18			12" X 18' CMP	(REMOVAL)	b	
D-2	11	a																												1				DI	(REMOVAL)	a	11
		b																													18			12" X 18' CMP	(REMOVAL)	b	
D-2	12	a																													68			12" X 68' RCP	(REMOVAL)	a	12
D-2	13	a																												1				DI	(REMOVAL)	a	13
		b																													17			12" X 17' CMP	(REMOVAL)	b	
D-2	14	a																												1				DI	(REMOVAL)	a	14
		b																													33			12" X 33' CMP	(REMOVAL)	b	
D-2	15	a																												1				DI	(REMOVAL)	a	15
		b																													22			8" X 22' CMP	(REMOVAL)	b	
D-2	16	a																												1				DI	(REMOVAL)	a	16
		b																													15			8" X 15' CMP	(REMOVAL)	b	
D-2	17	a																												1				DI	(REMOVAL)	a	17
		b																													237			12" X 237' RCP	(REMOVAL)	b	
		c																												1				DI	(REMOVAL)	c	
		d																													115			15" X 115' RCP	(REMOVAL)	d	
D-2	18	a																												1				DI	(REMOVAL)	a	18
		b																													17			8" X 17' CMP	(REMOVAL)	b	
D-2	19	a																												1				DI	(REMOVAL)	a	19
		b																													84			12" X 84' RCP	(REMOVAL)	b	
		c																												1				DI	(REMOVAL)	c	
TOTAL SHEET DQ-2					101		6			3	2	1				2	1							3.3		879		12	6	11	644						

FOR REDUCED PLANS
ORIGINAL SCALE IS IN INCHES
0 1 2 3
ALL DIMENSIONS SHOWN IN FEET
UNLESS OTHERWISE NOTED

DQ-2

8/15/2016

...\511\18581d002.dgn

REVISION #	DATE:	DESCRIPTION AND SHEET NO.:	APPROVED BY:	DATE:

REGISTERED PROFESSIONAL ENGINEER
AMANDA J. LEE
No. 84180
Exp. 9-30-17
CIVIL
STATE OF CALIFORNIA

DRAINAGE PLAN SHEET NO.	DRAINAGE SYSTEM NO.	DRAINAGE UNIT NO.	WELDED STEEL PIPE		REINFORCED CONCRETE PIPE				36" METAL PIPE RISER (OMP/GMP)	18" CONCRETE FLARED END SECTION	FRAME & COVER/LID					INLET						SHALLOW MANHOLE	48" MANHOLE	MINOR CONCRETE (MINOR STRUCTURE)	MINOR CONCRETE (BACKFILL)	MISC IRON & STEEL	HEIGHT OF INLET/MANHOLE 'H' (N)	RSP NO. 2, METHOD B	RSP FABRIC (CLASS 8)	REMOVE INLET	REMOVE PIPE	REMODEL MANHOLE	REMOVE MANHOLE	ABANDON PIPE	DESCRIPTION	STATION	DRAINAGE UNIT NO.	DRAINAGE SYSTEM NO.
			8"	10"	18"	30"	24" RISER (DR5/304)	36" RISER (OCP/GCP)			DR5/304 GRATE (N)	TYPE 24-12x GRATE (N)	TYPE 36R GRATE (N)	OMP LID (N)	MANHOLE FRAME AND COVER (N)	DR5/304 (N)	DI GOL (N)	DI G1 (N)	DI GCP (N)	DI OMP (N)	DI GMP (N)																		
			LF	LF	LF	LF	LF	LF	LF	EA	EA	EA	EA	EA	EA	EA	EA	EA	EA	EA	EA	EA	CY	CY	LBS	FT	CY	SY	EA	LF	EA	EA	EA				
D-4	20	a	69																														8" X 69' WSP		a	20
		b										1						1					1.6		239	6.0								DI G1	"F" 34+55 34.17RT	b	
		c		86																													10" X 86' WSP		c	
		d										1						1					1.5		239	5.5								DI G1	"F" 34+20 47.65LT	d	
		e	86																														8" X 86" WSP		e	
		f	35																														8" X 35' WSP		f	
		g													1							1			270	6.5								SHALLOW MH	"F" 33+89 27.28LT	g	
		h			138																												18" X 138' RCP		h	
		i						4.5						1						1						236	4.5								DI GCP	"S" 634+94 50.96LT	i	
		j					3.5				1					1									320	3.5								DI DR5	"F" 33+27 98.51 LT	j	
		k			77																												18" X 77' RCP		k	
		l			53																												18" X 53' RCP		l	
		m									1					1									320	3.5								DI DR5	"F" 32+22 112.69LT	m	
		n			108																												18" X 108' RCP		n	
		o					5.1				1					1									320	5.1								DI DR5	"S" 636+43 50.99	o	
		p					3.50				1					1									320	3.50								DI DR5	"S" 636+32 23.00RT	p	
		q			73																												18" X 73' RCP		q	
		r			36																												18" X 36' RCP		r	
		s							1				1								1				236	6.41								DI GMP	"F4" 427+66 41.97	s	
		t					3.03				1					1									320	3.03								DI DR5	"S" 637+48 28.78LT	t	
		u			154																		1.7										18" X 153' RCP		u	
		v			31																												18" X 31' RCP		v	
		w						3.98					1							1					236	3.98								DI GCP	"F4" 427+87 67.92LT	w	
		x										1						1					1.1		239	3.5								DI G1	"F" 32+33 62.76LT	x	
		y			108																												18" X 108' RCP		y	
		z										1						1					1.6		239	6.0								DI G1	"F4" 431+20 31.46LT	z	
		aa										1						1					1.1		239	3.5								DI G1	"F4" 431+21 19.94LT	aa	
		ab			10																			1.0										18" X 10' RCP		ab	
		ac			86																												18" X 86' RCP		ac	
		ad			164																												18" X 164' RCP		ad	
		ae						11.5					1						1						236	11.5								DI GCP	"F2" 229+51 26.36RT	ae	
		af			80																												18" X 84' RCP		af	
		ag								1																							FES	"F2" 229+49 29.06LT	ag	
		ah																										4	2						RSP		ah	
D-4	21	a										1						1					1.1		239	3.5								DI G1	"F" 32+83 42.47RT	a	21
		b			36																												18" X 36' RCP		b	
		c								1																							FES	"F" 32+66 74.22RT	c	
		d																										4	2						RSP		d	
D-4	22	a																												1					DI	REMOVE	a	22
		b																													54			12" X 54' CMP	REMOVE	b	
		c																												1					DI	REMOVE	c	
		d																												24			12" X 24' CMP	REMOVE	d	
TOTAL SHEET DQ-3			190	86	1154		14.9	15.5	1	2	5	6	4		1	5		6	3		1	1		8.0	2.7	4248		8	4	2	78							

FOR REDUCED PLANS
ORIGINAL SCALE IS IN INCHES 0 1 2 3

ALL DIMENSIONS SHOWN IN FEET
UNLESS OTHERWISE NOTED

DQ-3

PLAN SCALE: N/A
PROFILE SCALE: N/A
HORIZ:
VERT:

CONTRACT NO: 17-XX
DESIGNED: A. LEE
DRAWN: A. LEE
CHECKED:
RECORD DRAWING: DATE:

DOKKEN ENGINEERING
110 BLUE RAVINE ROAD #200
FOLSOM, CA 95630
PHONE: (916) 858-0642
FAX: (916) 985-1845

CITY OF YUBA CITY

5TH STREET BRIDGE REPLACEMENT
DRAINAGE QUANTITIES

SHEET NO.
OF
215

8/15/2016

...\5111\8581d003.dgn

REVISION #	DATE:	DESCRIPTION AND SHEET NO.:	APPROVED BY:	DATE:

REGISTERED PROFESSIONAL ENGINEER
AMANDA J. LEE
No. 84180
Exp. 9-30-17
CIVIL
STATE OF CALIFORNIA

PLAN SCALE: N/A
PROFILE SCALE: N/A
HORIZ:
VERT:

CONTRACT NO: 17-XX
DESIGNED: A. LEE
DRAWN: A. LEE
CHECKED:
RECORD DRAWING:
DATE:

DOKKEN ENGINEERING
110 BLUE RAVINE ROAD #200
FOLSOM, CA 95630
PHONE: (916) 858-0642
FAX: (916) 985-1865

CITY OF YUBA CITY

5TH STREET BRIDGE REPLACEMENT

DRAINAGE QUANTITIES

DRAINAGE PLAN SHEET NO.	DRAINAGE SYSTEM NO.	DRAINAGE UNIT NO.	WELDED STEEL PIPE 8" LF	WELDED STEEL PIPE 10" LF	REINFORCED CONCRETE PIPE 18" LF	REINFORCED CONCRETE PIPE 30" LF	REINFORCED CONCRETE PIPE 24" RISER (DR5/304) LF	REINFORCED CONCRETE PIPE 36" RISER (OCP/GCP) LF	36" METAL PIPE RISER (OMP/GMP) LF	18" CONCRETE FLARED END SECTION LF	FRAME & COVER/LID DR5/304 (N) EA	FRAME & COVER/LID TYPE 24-12x GRATE (N) EA	FRAME & COVER/LID TYPE 36R GRATE (N) EA	FRAME & COVER/LID OMP LID (N) EA	FRAME & COVER/LID MANHOLE FRAME AND COVER (N) EA	INLET DR5/304 (N) EA	INLET DI GOL (N) EA	INLET DI G1 (N) EA	INLET DI GCP (N) EA	INLET DI OMP (N) EA	INLET DI GMP (N) EA	SHALLOW MANHOLE EA	48" MANHOLE EA	MINOR CONCRETE (MINOR STRUCTURE) CY	MINOR CONCRETE (BACKFILL) CY	MISC IRON & STEEL LBS	HEIGHT OF INLET/MANHOLE 'H' (N) FT	RSP NO. 2, METHOD B CY	RSP FABRIC (CLASS 8) SY	REMOVE INLET EA	REMOVE PIPE LF	REMODEL MANHOLE EA	REMOVE MANHOLE EA	ABANDON PIPE EA	DESCRIPTION	STATION	DRAINAGE UNIT NO.	DRAINAGE SYSTEM NO.
D-2	23	a					6.0				1					1											320	6.0								DI DR5	"B" 532+10 31.17RT	a	23
		b			84																														18" X 84' RCP		b	
		c							7.85					1							1						177	7.85								DI OMP	"B" 532+10 55.38LT	c	
		d			280																														18" X 280' RCP		d	
		e							7.0					1							1						177	7.0								DI OMP	"B" 529+28 56.67LT	e	
D-1		f										1						1						1.0		239	3.0								DI G1	"B" 529+57 47.38 RT	f	
		g			36																				1.8										18" X 41' RCP		g	
		h													1								1				7.68								SHALLOW MH	"B" 529+27 23.67RT	h	
		i			77																														18" X 79' RCP		i	
		j			212																														18" X 212' RCP		j	
		k							6.0					1							1						177	6.0								DI OMP	"B" 527+14 57.13LT	k	
		l					3.5				1					1											320	3.5								DI DR5	"B" 527+14 26.00RT	l	
		m			81																														18" X 81' RCP		m	
		n							3.5					1							1						177	3.5								DI OMP	"B" 527+10 77.06LT	n	
		o			18																														18" X 18' RCP		o	
		p			193																														18" X 193' RCP		p	
		q						5.0					1								1						236	6.0								DI GCP	"B" 525+19 37.64LT	q	
		r					3.5				1					1											320	3.5								DI DR5	"B" 525+19 26.00RT	r	
		s			61																														18" X 61' RCP		s	
		t			174																														18" X 174' RCP		t	
		u							6.0					1							1						177	6.0								DI OMP	"B" 523+43 32.12LT	u	
		v					3.25				1					1											320	3.25								DI DR5	"B" 523+43 27.25RT	v	
		w			57																				0.4										18" X 57' RCP		w	
		x			57																														18" X 57' RCP		x	
		aa					2.50				1					1											320	2.50								DI DR5	"B" 531+36 47.52RT	aa	
		ba			74																				4.8										18" X 74' RCP		ba	
		fa					3.50					1						1						1.2		239	3.50								DI G1	"B" 528+96 39.56RT	fa	
		ga			32																														18" X 32' RCP		ga	
D-2	24	a																												1					DI	(REMOVE)	a	24
		b																													37				12" X 37' RCP	(REMOVE)	b	
		c																												1					DI	(REMOVE)	c	
D-1		d																													324				12" X 324' RCP	(REMOVE)	d	
		e																												1					DI	(REMOVE)	e	
		f																													2				12" X 2' RCP	(REMOVE)	f	
		g																															1		DI	(REMOVE)	g	
		h																													300				12" X 300' RCP	(REMOVE)	h	
TOTAL SHEET DQ-4					1436		22.3	5.0	30.4		5	2	1	5	1	5		2	1	5			1	2.2	7.0	3469				3	663		1					

FOR REDUCED PLANS
ORIGINAL SCALE IS IN INCHES

0 1 2 3

ALL DIMENSIONS SHOWN IN FEET
UNLESS OTHERWISE NOTED

SHEET NO.
DQ-4
OF
215

8/15/2016

...\511\18581d004.dgn

REVISION #	DATE:	DESCRIPTION AND SHEET NO.:	APPROVED BY:	DATE:

REGISTERED PROFESSIONAL ENGINEER
AMANDA J. LEE
No. 84180
Exp. 9-30-17
CIVIL
STATE OF CALIFORNIA

PLAN SCALE: N/A
PROFILE SCALE: N/A
HORIZ:
VERT:

CONTRACT NO: 17-XX
DESIGNED: A. LEE
DRAWN: A. LEE
CHECKED:
RECORD DRAWING:
DATE:

DOKKEN ENGINEERING
110 BLUE RAVINE ROAD #200
FOLSOM, CA 95630
PHONE: (916) 858-0642
FAX: (916) 985-1865

CITY OF YUBA CITY

5TH STREET BRIDGE REPLACEMENT

DRAINAGE QUANTITIES

DRAINAGE PLAN SHEET NO.	DRAINAGE SYSTEM NO.	DRAINAGE UNIT NO.	WELDED STEEL PIPE		REINFORCED CONCRETE PIPE				36" METAL PIPE RISER (OMP/GMP)	18" CONCRETE FLARED END SECTION	FRAME & COVER/LID					INLET						SHALLOW MANHOLE	48" MANHOLE	MINOR CONCRETE (MINOR STRUCTURE)	MINOR CONCRETE (BACKFILL)	MISC IRON & STEEL	HEIGHT OF INLET/MANHOLE 'H' (N)	RSP NO. 2, METHOD B	RSP FABRIC (CLASS 8)	REMOVE INLET	REMOVE PIPE	REMODEL MANHOLE	REMOVE MANHOLE	ABANDON PIPE	DESCRIPTION	STATION	DRAINAGE UNIT NO.	DRAINAGE SYSTEM NO.
			8"	10"	18"	30"	24" RISER (DR5/304)	36" RISER (OCP/GCP)			DR5/304 GRATE (N)	TYPE 24-12x GRATE (N)	TYPE 36R GRATE (N)	OMP LID (N)	MANHOLE FRAME AND COVER (N)	DR5/304 (N)	DI GOL (N)	DI G1 (N)	DI GCP (N)	DI OMP (N)	DI GMP (N)																			
			LF	LF	LF	LF	LF	LF	LF	LF	EA	EA	EA	EA	EA	EA	EA	EA	EA	EA	EA	EA	EA	CY	CY	LBS	FT	CY	SY	EA	LF	EA	EA	EA				
D-4	25	a	40																															8" X 40' WSP		a	25
		b													1								1			270	7.5							48" MANHOLE	"F" 54+25 31.75LT	b	
		c			49																													18" X 49' RCP		c	
		d													1								1			270	8.0							48" MANHOLE	"F" 54+25 21.00LT	d	
		e	40																															8" X 40' WSP		e	
		f			170																													18" X 170' RCP		f	
D-3		g													1								1			270	7.5							48" MANHOLE	"F" 55+97 21.88RT	g	
		h					4.5				1					1										320	4.5							DI 304	"F" 55+97 36.61 RT	h	
		i			12																													18" X 12' RCP		i	
		j			99																													18" X 99' RCP		j	
		k													1								1			270	7.5							48" MANHOLE	"F" 56+99 26.36RT	k	
		l					4.5				1					1										320	4.5							DI 304	"F" 56+99 38.82RT	l	
		m			9																													18" X 9' RCP		m	
		n			61																													18" X 61' RCP		n	
		o													1								1			270	8.0							48" MANHOLE	"F" 57+63 26.73RT	o	
		p							6.0					1						1						177	6.0							DI OMP	"F" 57+63 50.53 RT	p	
		q			11																													18" X 11' RCP		q	
		r					4.5				1					1										320	4.5							DI 304	"F" 57+63 38.08RT	r	
		s			8																													18" X 8' RCP		s	
		t			140																													18" X 140' RCP		t	
		u													1								1			270	7.75							48" MH	"F" 59+05 16.72RT	u	
		v					3.75				1					1										320	3.75							DI 304	"F" 58+91 36.45RT	v	
		w			21																													18" X 21' RCP		w	
		x			196																													18" X 196' RCP		x	
		y													1								1			270	8.0							48" MANHOLE	"F" 61+05 25.0RT	y	
		z				165																												30" X 165' RCP		z	
		aa													1									1		270	7.25							SHALLOW MH	"F" 62+74 23.10RT	aa	
		ab				166																												30" X 166' RCP		ab	
		ac													1									1		270	9.11							SHALLOW MANHOLE	"F" 64+42 25.49RT	ac	
D-4	26	a					3.5				1					1										320	3.5							DI 304	"F" 59+58 44.34RT	a	26
		b			54																													18" X 54' RCP		b	
		c										1					1							2.5		239	3.5							DI GOL	"F"60+13 56.00RT	c	
		d			74																													18" X 74' RCP		d	
		e					4.1				1					1										320	4.1							DI 304	"F" 60+89 56.61RT	e	
		f			33																													18" X 33' RCP		f	
		g			41																													18" X 41' RCP		g	
		h					3.5				1					1										320	3.5							DI 304	"F" 61+31 60.59RT	h	
		i					3.5				1					1										320	3.5							DI 304	"F" 61+51 36.00RT	i	
		j			30																													18" X 30' RCP		j	
		k			47																													18" X 47' RCP		k	
		l										1					1							2.5		239	3.5							DI GOL	"J" 761+54 62.64LT	l	
		m			97																													18" X 97' RCP		m	
		n										1					1							2.5		239	3.5							DI GOL	"J" 760+58 39.51LT	n	
TOTAL SHEET DQ-5			80		1240	331	31.9		6		8	3		1	9	8	3			1		2	7	7.5		5884												

FOR REDUCED PLANS
ORIGINAL SCALE IS IN INCHES
0 1 2 3
ALL DIMENSIONS SHOWN IN FEET
UNLESS OTHERWISE NOTED

8/15/2016

...\51\1858\d005.dgn

DQ-5

SHEET NO.
OF
215

REVISION #	DATE:	DESCRIPTION AND SHEET NO.:	APPROVED BY:	DATE:

REGISTERED PROFESSIONAL ENGINEER
AMANDA J. LEE
No. 84180
Exp. 9-30-17
CIVIL
STATE OF CALIFORNIA

PLAN SCALE: N/A
PROFILE SCALE: N/A
HORIZ:
VERT:

CONTRACT NO: 17-XX
DESIGNED: A. LEE
DRAWN: A. LEE
CHECKED:
RECORD DRAWING: DATE:

DOKKEN ENGINEERING
110 BLUE RAVINE ROAD 2200
FOLSOM, CA 95630
PHONE: (916) 858-0642
FAX: (916) 985-1845

CITY OF YUBA CITY

5TH STREET BRIDGE REPLACEMENT

DRAINAGE QUANTITIES

DRAINAGE PLAN SHEET NO.	DRAINAGE SYSTEM NO.	DRAINAGE UNIT NO.	WELDED STEEL PIPE		REINFORCED CONCRETE PIPE				36" METAL PIPE RISER (OMP/GMP)	18" CONCRETE FLARED END SECTION	FRAME & COVER/LID					INLET						SHALLOW MANHOLE	48" MANHOLE	MINOR CONCRETE (MINOR STRUCTURE)	MINOR CONCRETE (BACKFILL)	MISC IRON & STEEL	HEIGHT OF INLET/MANHOLE 'H' (N)	RSP NO. 2, METHOD B	RSP FABRIC (CLASS 8)	REMOVE INLET	REMOVE PIPE	REMODEL MANHOLE	REMOVE MANHOLE	ABANDON PIPE	DESCRIPTION	STATION	DRAINAGE UNIT NO.	DRAINAGE SYSTEM NO.
			8"	10"	18"	30"	24" RISER (DR5/304)	36" RISER (OCP/GCP)			DR5/304 GRATE (N)	TYPE 24-12x GRATE (N)	TYPE 36R GRATE (N)	OMP LID (N)	MANHOLE FRAME AND COVER (N)	DR5/304 (N)	DI GOL (N)	DI G1 (N)	DI GCP (N)	DI OMP (N)	DI GMP (N)																	
			LF	LF	LF		LF	LF	LF	EA	EA	EA	EA	EA	EA	EA	EA	EA	EA	EA	EA	EA	EA	CY	CY	LBS	FT	CY	SY	EA	LF	EA	EA	EA			
D-4	27	a										1					1							2.5		239	3.5								DI GOL	"F" 56+50 36.79LT	a	
		b			78																														18" X 78' RCP		b	
		c					3.5				1					1										320	3.5								DI 304	"F" 57+31 39.06LT	c	
		d			63																														18" X 63' RCP		d	
		e					3.5				1					1										320	3.5								DI 304	"F" 57+97 39.02LT	e	
		f			75																														18" X 75' RCP		f	
		g					3.5				1					1										320	3.5								DI 304	"F" 58+74 42.34LT	g	
		h			86																														18" X 86' RCP		h	
		i										1					1							2.5		239	3.5								DI GOL	"F" 59+62 39.5LT	i	
		j			85																														18" X 85' RCP		j	
		k					4.25				1					1										320	4.25								DI 304	"F" 60+50 37.00LT	k	
		l			47																														18" X 47' RCP		l	
		m					5.25				1					1										320	5.25								DI 304	"F" 60+99 37.00LT	m	
		n			59																														18" X 59' RCP		n	
		o			65																														18" X 65' RCP		o	
		p					4.75				1					1										320	4.75								DI 304	"F" 61+65 37.00LT	p	
		q			37																														18" X 37' RCP		q	
		r					4.2				1					1										320	4.2								DI 304	"J" 762+96 40.50LT	r	
		s			50																														18" X 50' RCP		s	
		t					3.75				1					1										320	3.75								DI 304	"J" 763+47 40.50LT	t	
		u			60																														18" X 60' RCP		u	
		v					3.5				1					1										320	3.5								DI 304	"J" 764+08 40.5LT	v	
D-4	28	a					3.5				1					1										320	3.5								DI 304	"J" 764+15 39.50RT	a	28
		b			65																														18" X 65' RCP		b	
		c										1						1					1.1		239	3.75								DI G1	"J" 763+48 39.50RT	c	
		d			58																														18" X 58' RCP		d	
		e					4.5				1					1										320	4.5								DI 304	"J" 762+88 39.50RT	e	
		f			27																														18" X 27' RCP		f	
		g												1								1				8.3								48" MANHOLE	"J" 762+57 38.61RT	g	
		h			43																														18" X 43' RCP		h	
D-4	29	a					3.5				1					1										320	3.5								DI 304	"F" 64+36 33.00LT	a	29
		b			86																														18" X 86' RCP		b	
		c					4.25				1					1										320	4.25								DI 304	"F" 63+48 33.00LT	c	
		d			50																														18" X 50' RCP		d	
		e					5.25				1					1										320	5.25								DI 304	"F" 62+95 33.00LT	e	
		f			20																														18" X 20' RCP		f	
D-4	30	a																												1					DI	(REMOVE)	a	30
		b																														1			12" X 11' RCP	(REMOVE)	b	
		c																												8				12" X 8' RCP	(REMOVE)		
D-4	31	a					3.5				1					1										320	3.5								DI 304	"F" 63+15 36.00RT	a	31
		b			118																														18" X 118' RCP		b	
		c					4.25				1					1											4.25								DI 304	"F" 63+35 36.00RT	c	
		d			10																					320									18" X 10' RCP		d	
TOTAL SHEET DQ-6					1182		65				16	3			1	16	2	1					1	6.1		5837				1	8			1			

FOR REDUCED PLANS
ORIGINAL SCALE IS IN INCHES
0 1 2 3
ALL DIMENSIONS SHOWN IN FEET
UNLESS OTHERWISE NOTED

DQ-6

SHEET NO.
OF
215

8/15/2016

...\511\18581d006.dgn

REVISION #	DATE:	DESCRIPTION AND SHEET NO.:	APPROVED BY:	DATE:

REGISTERED PROFESSIONAL ENGINEER
AMANDA J. LEE
No. 84180
Exp. 9-30-17
CIVIL
STATE OF CALIFORNIA

PLAN SCALE: N/A
PROFILE SCALE: N/A
HORIZ:
VERT:

CONTRACT NO: 17-XX
DESIGNED: A. LEE
DRAWN: A. LEE
CHECKED:
RECORD DRAWING:
DATE:

DOKKEN ENGINEERING
110 BLUE RAVINE ROAD #200
FOLSOM, CA 95630
PHONE: (916) 858-0642
FAX: (916) 858-0643

CITY OF YUBA CITY

5TH STREET BRIDGE REPLACEMENT
DRAINAGE QUANTITIES

SHEET NO.
OF
215

DRAINAGE PLAN SHEET NO.	DRAINAGE SYSTEM NO.	DRAINAGE UNIT NO.	WELDED STEEL PIPE		REINFORCED CONCRETE PIPE				36" METAL PIPE RISER (OMP/GMP)	18" CONCRETE FLARED END SECTION	FRAME & COVER/LID					INLET						SHALLOW MANHOLE	48" MANHOLE	MINOR CONCRETE (MINOR STRUCTURE)	MINOR CONCRETE (BACKFILL)	MISC IRON & STEEL	HEIGHT OF INLET/MANHOLE 'H' (N)	RSP NO. 2, METHOD B	RSP FABRIC (CLASS 8)	REMOVE INLET	REMOVE PIPE	REMODEL MANHOLE	REMOVE MANHOLE	ABANDON PIPE	DESCRIPTION	STATION	DRAINAGE UNIT NO.	DRAINAGE SYSTEM NO.
			8"	10"	18"	30"	24" RISER (DR5/304)	36" RISER (OCP/GCP)			DR5/304 GRATE (N)	TYPE 24-12x GRATE (N)	TYPE 36R GRATE (N)	OMP LID (N)	MANHOLE FRAME AND COVER (N)	DR5/304 (N)	DI GOL (N)	DI G1 (N)	DI GCP (N)	DI OMP (N)	DI GMP (N)																		
			LF	LF	LF	LF	LF	LF	LF	EA	EA	EA	EA	EA	EA	EA	EA	EA	EA	EA	EA	EA	EA	CY	CY	LBS	FT	CY	SY	EA	LF	EA	EA	EA			
D-4	32	a										1					1							2.5		239	3.5								DI GOL	"J" 761+05 38.48RT	a	32
		b			66																				3.7										18" X 66' RCP		b	
		c					3.7				1					1										320	3.7									DI 304	"J" 761+73 38.50RT	c	
		d			37																															18" X 37' RCP		d	
D-4	33	a																												1					DI	(REMOVE)	a	33
		b																													79				10" X 79' RCP	(REMOVE)	b	
		c																															1		MH	(REMOVE)	c	
		d																													29				10" X 29' RCP	(REMOVE)	d	
		e																												1					DI	(REMOVE)	e	
		f																													39				8" X 39'	(REMOVE)	f	
		g																													60				12" X 60' RCP	(REMOVE)	g	
		h																															1		MH	(REMOVE)	h	
		i																													17				8" X 17' RCP	(REMOVE)	i	
		j																															1		MH	(REMOVE)	j	
		k																												1					DI	(REMOVE)	k	
		l																													26				8" X 26' RCP	(REMOVE)	l	
		m																															1		MH	(REMOVE)	m	
		n																													49				12" X 49' RCP	(REMOVE)	n	
		o																													9				8" X 9' RCP	(REMOVE)	o	
		p																												1					DI	(REMOVE)	p	
		q																													15				12" X 15' RCP	(REMOVE)	q	
		r																												1					DI	(REMOVE)	r	
		s																													18				6" X 18' RCP	(REMOVE)	s	
		t																													165				8" X 165' RCP	(REMOVE)	t	
		u																													165				12" X 165' RCP	(REMOVE)	u	
		v																															1		MH	(REMOVE)	v	
TOTAL SHEET DQ-7			0	0	103	0	4	0	0	0	1	1	0	0	0	1	1	0	0	0	0	0	0	2.5	3.7	559		0	0	5	671	0	4	0				
TOTAL SHEET DQ-1			0	0	1113	0	43	0	0	0	12	0	0	0	7	12	0	0	0	0	0	1	6	0	0.5	5730		0	0	2	47	2	0	0				
TOTAL SHEET DQ-2			0	0	101	0	6	0	0	3	2	1	0	0	0	2	1	0	0	0	0	0	0	3.3	0	879		12	6	11	644	0	0	0				
TOTAL SHEET DQ-3			190	86	1154	0	15	20	1	2	5	6	4	0	1	5	0	6	3	0	1	1	0	8.0	2.7	4248		8	4	2	78	0	0	0				
TOTAL SHEET DQ-4			0	0	1436	0	22	5.0	30.4	0	5	2	1	5	1	5	0	2	1	5	0	0	1	2.2	7.0	3469		0	0	3	663	0	1	0				
TOTAL SHEET DQ-5			80	0	1240	331	32	0	6	0	8	3	0	1	9	8	3	0	0	1	0	2	7	7.5	0	5884		0	0	0	0	0	0	0				
TOTAL SHEET DQ-6			0	0	1182	0	65	0	0	0	16	3	0	0	1	16	2	1	0	0	0	0	1	6.1	0	5837		0	0	1	8	0	0	1				
TOTAL ALL SHEETS			270	86	6329	331	187	25	37.4	5	49	16	5	6	19	49	7	9	4	6	1	4	15	29.6	13.9	26606		20	10	24	2114	2	5	1				

FOR REDUCED PLANS
ORIGINAL SCALE IS IN INCHES

0 1 2 3

ALL DIMENSIONS SHOWN IN FEET
UNLESS OTHERWISE NOTED

DQ-7

8/15/2016

...\511\18581d007.dgn

LEGEND:

EXISTING UNDERGROUND:		PROPOSED UNDERGROUND:
—e— —e—	ELECTRIC (PG&E)	—E—(UG)— —E
---gs--- ---gs---	NATURAL GAS (PG&E)	---GS--- ---GS---
---tv--- ---tv---	TELECOM (COMCAST)	---TV--- ---TV---
--tc--- --tc-	TELECOM (VAST)	--TC--- --TC-
--t--- --t---	TELECOM (AT&T)	--T--- --T---
-w--- w---	WATER	-W--- W---
—s—s—s—s—	SEWER	--S--- --S-
--sd--- --sd-	STORM DRAIN	--SD--- --SD-
	DUCT BANK (AT&T, VAST & COMCAST)	TV-T-TC
/ / / / / / / / / /	ABANDONED	/ / / / / / / / / /
EXISTING OVERHEAD:		**PROPOSED OVERHEAD:**
—e— —(oh)—	ELECTRIC (PG&E)	—E— —(OH)—
---tv--- ---(oh)—	TELCOM (COMCAST)	---TV--- ---(OH)—
--t--- --(oh)—	TELCOM (AT&T)	--T--- --(OH)—
—(oh)— e/tv/t—	JOINT OVERHEAD	—(OH)— E/TV/T—
/ / / / / / / / / /	TO BE REMOVED	/ / / / / / / / / /

POTHOLE LOCATION TABLE

No.	UTILITY	DATE	DEPTH TO TOP	APPROX ELEV	SURFACE TYPE
1A	WATER	4/14/16	43"	55.64	12" STEEL
1B	FIBER OPTIC	4/14/16	53"	54.80	CONDUIT BOX
2	WINDOW	4/14/16	N/A	N/A	N/A
3	NATURAL GAS	4/15/16	32"	57.40	4" STEEL

LEGEND:

- MANHOLE
- VALVE
- UTILITY BOX
- MONTIORING WELL
- FIRE HYDRANT
- POWER POLE
- GUY WIRE
- POTHOLE

NOTES:

1. LOCATIONS OF UTILITIES SHOWN ON THESE PLANS ARE APPROXIMATE AND SHALL BE VERIFIED BY THE CONTRACTOR PRIOR TO CONSTRUCTION.
2. PIPE DIAMETERS NOTED ON EXISTING FACILITIES ARE PER UTILITY COMPANY RECORD DRAWINGS AND SHALL BE VERIFIED BY THE CONTRACTOR PRIOR TO CONSTRUCTION.
3. FOR STORM DRAIN LOCATIONS AND DETAILS SEE DRAINAGE PLAN AND PROFILE SHEETS.
4. FOR DETAILS NOT SHOWN, SEE UTILITY DETAIL SHEETS.

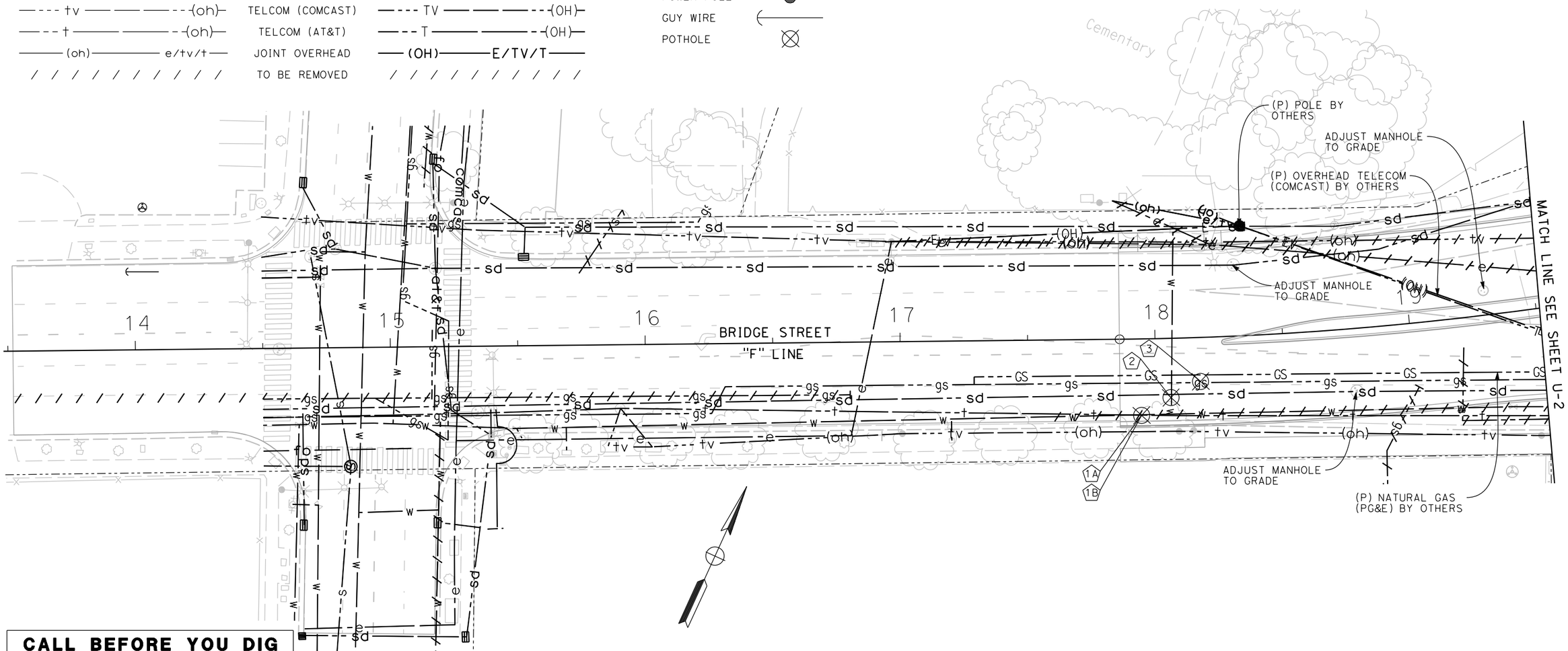

CALL BEFORE YOU DIG

THE CONTRACTOR SHALL CALL "UNDERGROUND SERVICE ALERT" (USA) AT 800-227-2600 AT LEAST 2 WORKING DAYS PRIOR TO PERFORMING ANY EXCAVATION

APPROVED FOR UTILITY INFORMATION ONLY

FOR REDUCED PLANS ORIGINAL SCALE IS IN INCHES 0 1 2 3

ALL DIMENSIONS SHOWN IN FEET UNLESS OTHERWISE NOTED

U-1

REVISION #	DATE:	DESCRIPTION AND SHEET NO.:	APPROVED BY:	DATE:

REGISTERED PROFESSIONAL ENGINEER NATHAN J. DONNELLY No. 64459 Exp. 6/30/17 CIVIL STATE OF CALIFORNIA

PLAN SCALE: 1"=40'
PROFILE SCALE:
HORIZ:
VERT:

CONTRACT NO: 17-XX
DESIGNED: N. DONNELLY
DRAWN: E. ESPINOZA
CHECKED:
RECORD DRAWING:
DATE:

DOKKEN ENGINEERING
110 BLUE RAVINE ROAD #200 FOLSOM, CA 95630
PHONE: (916) 858-0642 FAX: (916) 858-0643

CITY OF YUBA CITY

5TH STREET BRIDGE REPLACEMENT
UTILITY PLAN

SHEET NO. 1 OF 4

8/15/2016

...\511\1858ka001.dgn

POTHOLE LOCATION TABLE

No.	UTILITY	DATE	DEPTH TO TOP	APPROX ELEV	SURFACE TYPE
4	NATURAL GAS	4/10/16	51"	53.30	4" STEEL
5	WINDOW	4/10/16	N/A	N/A	N/A
6	NATURAL GAS	4/10/16	42"	51.33	4" STEEL
7	NATURAL GAS	4/10/16	37"	51.32	4" STEEL
53A	NATURAL GAS	4/14/16	27"	52.41	4" STEEL
53B	WATER	4/14/16	63"	49.41	12" STEEL
54	ELECTRICAL	4/15/16	43"	49.89	4" STEEL

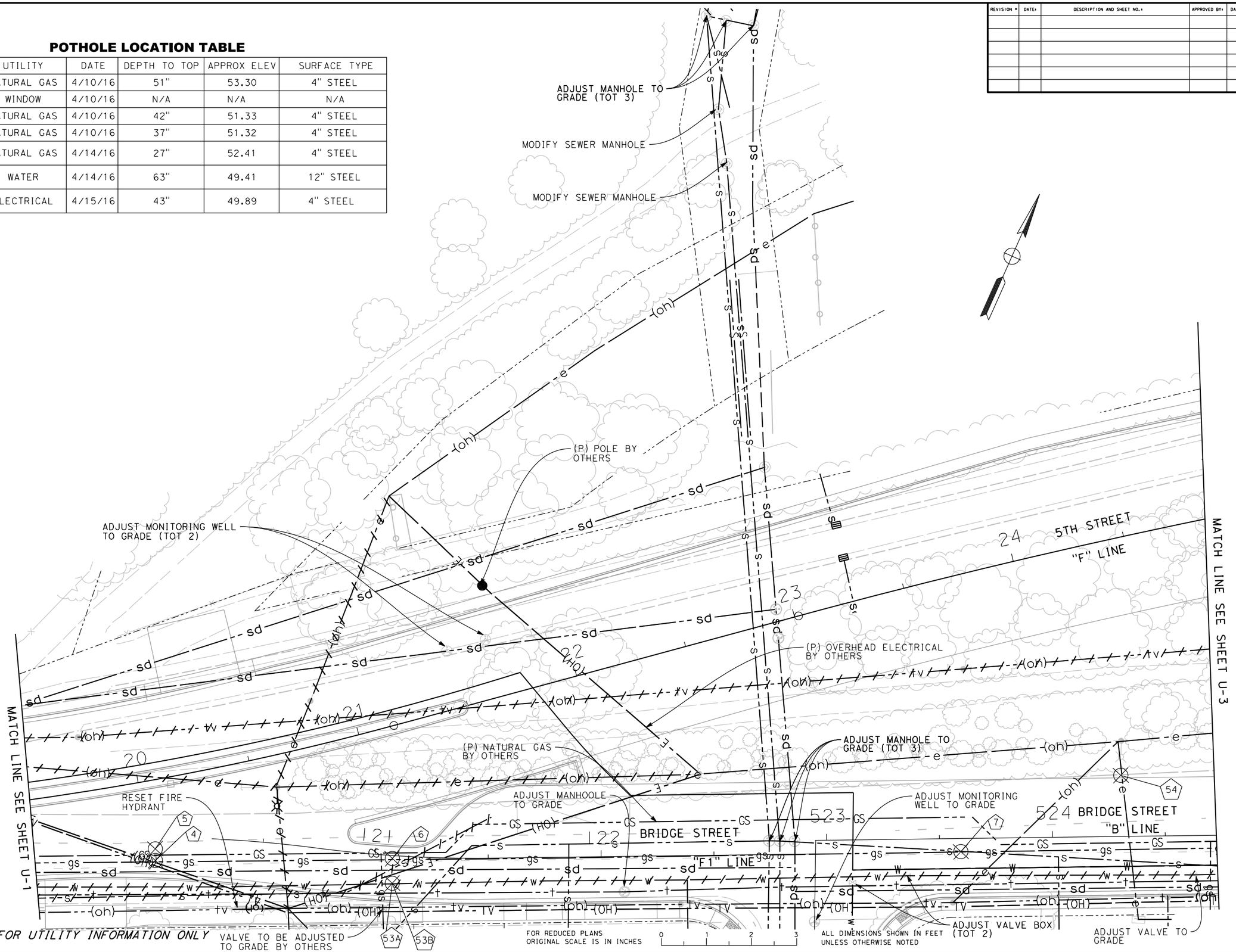

APPROVED FOR UTILITY INFORMATION ONLY

REVISION #	DATE:	DESCRIPTION AND SHEET NO.:	APPROVED BY:	DATE:

REGISTERED PROFESSIONAL ENGINEER
NATHAN J. DONNELLY
No. 64459
Exp. 6/30/17
CIVIL
STATE OF CALIFORNIA

PLAN SCALE: 1"=20'
PROFILE SCALE:
HORIZ:
VERT:

CONTRACT NO: 17-XX
DESIGNED: N. DONNELLY
DRAWN: E. ESPINOZA
CHECKED:
RECORD DRAWING:
DATE:

DOKKEN ENGINEERING
110 BLUE RAVINE ROAD #200
FOLSOM, CA 95630
PHONE: (916) 858-0642
FAX: (916) 858-0643

CITY OF YUBA CITY

5TH STREET BRIDGE REPLACEMENT

UTILITY PLAN

SHEET NO. 1 OF 4

U-2

8/15/2016

...\511\858k002.dgn

POTHOLE LOCATION TABLE

No.	UTILITY	DATE	DEPTH TO TOP	APPROX ELEV	SURFACE TYPE
9	NATURAL GAS	4/10/16	37"	51.16	4" STEEL
11	NATURAL GAS	4/15/16	38"	53.32	4" STEEL
12	WATER	4/14/16	37"	53.34	12" STEEL
55A	WATER	4/14/16	43"	50.35	12" STEEL
55B	GAS	4/14/16	24"	51.93	1" STEEL
58	NATURAL GAS	4/22/16	28"	56.40	6" STEEL
59	WATER	4/22/16	31"	56.11	10" STEEL

No.	UTILITY	DATE	DEPTH TO TOP	APPROX ELEV	SURFACE TYPE
13A	NATURAL GAS	4/18/16	63"	57.14	16" STEEL
13B	NATURAL GAS	4/18/16	31"	59.81	4" STEEL
14	WATER	4/15/16	44"	58.65	12" STEEL
15A	NATURAL GAS	4/15/16	38"	60.29	2" PLASTIC
15B	NATURAL GAS	4/15/16	34"	60.63	1" PLASTIC

REVISION #	DATE:	DESCRIPTION AND SHEET NO.:	APPROVED BY:	DATE:

REGISTERED PROFESSIONAL ENGINEER
NATHAN J. DONNELLY
No. 64459
Exp. 6/30/17
CIVIL
STATE OF CALIFORNIA

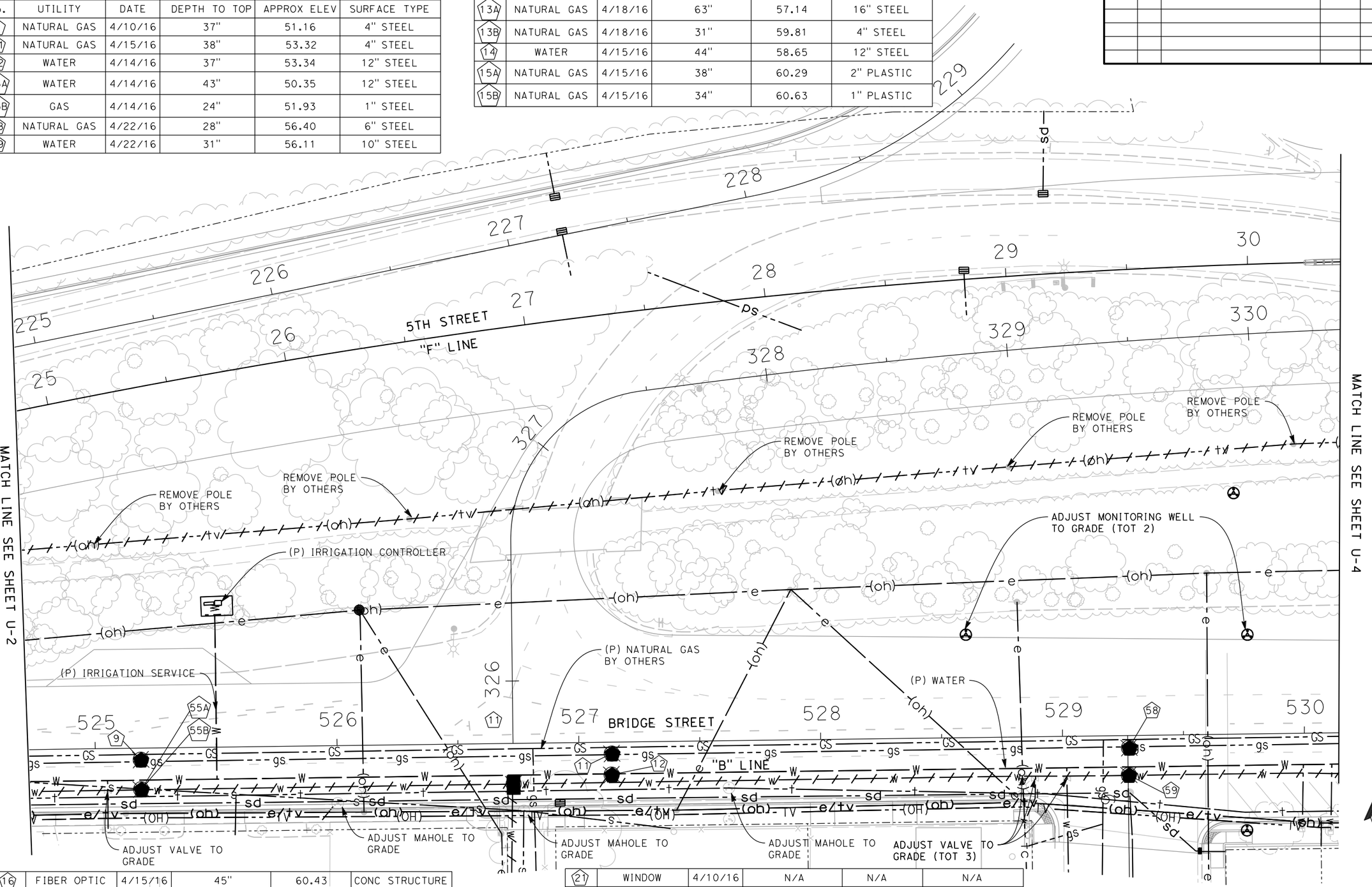

16	FIBER OPTIC	4/15/16	45"	60.43	CONC STRUCTURE
17	NATURAL GAS	4/15/16	36"	61.95	4" STEEL
18	WINDOW	4/15/16	N/A	N/A	N/A
19A	WATER	4/15/16	25"	62.67	1" COPPER
19B	SEWER	4/15/16	85"	57.67	24" TRANSITE

21	WINDOW	4/10/16	N/A	N/A	N/A
22	NATURAL GAS	4/18/16	66"	54.78	16" STEEL
23	SEWER	4/19/16	55"	57.98	24" STEEL
V3	STORM DRAIN	4/15/16	16"	58.85	12" CLAY

FOR REDUCED PLANS ORIGINAL SCALE IS IN INCHES 0 1 2 3

ALL DIMENSIONS SHOWN IN FEET UNLESS OTHERWISE NOTED

PLAN SCALE: 1"=20'
PROFILE SCALE:
HORIZ:
VERT:

CONTRACT NO: 17-XX
DESIGNED: N. DONNELLY
DRAWN: E. ESPINOZA
CHECKED:
RECORD DRAWING: DATE:

DOKKEN ENGINEERING
110 BLUE RAVINE ROAD #200
FOLSOM, CA 95630
PHONE: (916) 858-0642
FAX: (916) 858-0643

CITY OF YUBA CITY

5TH STREET BRIDGE REPLACEMENT

UTILITY PLAN

SHEET NO. 1 OF 4

U-3

8/15/2016

...\5\1\858ko003.dgn

REVISION #	DATE:	DESCRIPTION AND SHEET NO.:	APPROVED BY:	DATE:

REGISTERED PROFESSIONAL ENGINEER
NATHAN J. DONNELLY
No. 64459
Exp. 6/30/17
CIVIL
STATE OF CALIFORNIA

MATCH LINE SEE SHEET U-5

MATCH LINE SEE SHEET U-3

MATCH LINE SEE SHEET U-5

(P) IRRIGATION SERVICE
(P) IRRIGATION CONTROLLER
(P) POLE BY OTHERS
(P) AT&T VAULT BY OTHERS
INSTALL CONDUIT
INSTALL TELCOM DUCT BANK
TV-T-TC
ABANDON MONITORING WELL (TOTAL 2)
(P) COMCAST VAULT BY OTHERS
(P) VAST VAULT BY OTHERS
634 SUTTER STREET
"S" LINE
633
631
REMOVE POLE BY OTHERS
(P) JOINT TRENCH BY OTHERS
(P) WATER
ADJUST MONITORING WELL TO GRADE (TOT 2)
(P) WATER FUTURE CONNECTION
ADJUST MONITORING WELL TO GRADE (TOT 2)
REMOVE POLE BY OTHERS
(P) NATURAL GAS BY OTHERS
(P) OVERHEAD COMCAST BY OTHERS
ADJUST UTILITY COVER TO GRADE (TOT 2)
(P) NATURAL GAS BY OTHERS
(P) WATER
5TH STREET
"F" LINE
531
532
533
534
ADJUST VALVE TO GRADE
ADJUST MONITORING WELL TO GRADE
ADJUST UTILITY COVER TO GRADE
ADJUST MANHOLE TO GRADE (TOT 2)
RESET FIRE HYDRANT
ADJUST MANHOLE TO GRADE
ADJUST MONITORING WELL TO GRADE

NOTES:

1. FOR POTHOLING INFOMARTION, SEE TABLE ON SHEET U-3.

FOR REDUCED PLANS ORIGINAL SCALE IS IN INCHES
0 1 2 3
ALL DIMENSIONS SHOWN IN FEET UNLESS OTHERWISE NOTED

U-4

PLAN SCALE: 1"=20'
PROFILE SCALE:
HORIZ:
VERT:

CONTRACT NO: 17-XX
DESIGNED: N. DONNELLY
DRAWN: E. ESPINOZA
CHECKED:
RECORD DRAWING:
DATE:

DOKKEN ENGINEERING
110 BLUE RAVINE ROAD #200
FOLSOM, CA 95630
PHONE: (916) 858-0642
FAX: (916) 985-1845

CITY OF YUBA CITY

5TH STREET BRIDGE REPLACEMENT

UTILITY PLAN

SHEET NO. 1 OF 4

8/15/2016

...\511\1858ka004.dgn

REVISION #	DATE:	DESCRIPTION AND SHEET NO.:	APPROVED BY:	DATE:

REGISTERED PROFESSIONAL ENGINEER
NATHAN J. DONNELLY
No. 64459
Exp. 6/30/17
CIVIL
STATE OF CALIFORNIA

PLAN SCALE: 1"=20'
PROFILE SCALE:
HORIZ:
VERT:

CONTRACT NO: 17-XX
DESIGNED: N. DONNELLY
DRAWN: E. ESPINOZA
CHECKED:
RECORD DRAWING:
DATE:

DOKKEN ENGINEERING
110 BLUE RAVINE ROAD #200
FOLSOM, CA 95630
PHONE: (916) 858-0642
FAX: (916) 858-0643

CITY OF YUBA CITY

5TH STREET BRIDGE REPLACEMENT

UTILITY PLAN

SHEET NO. 1 OF 4

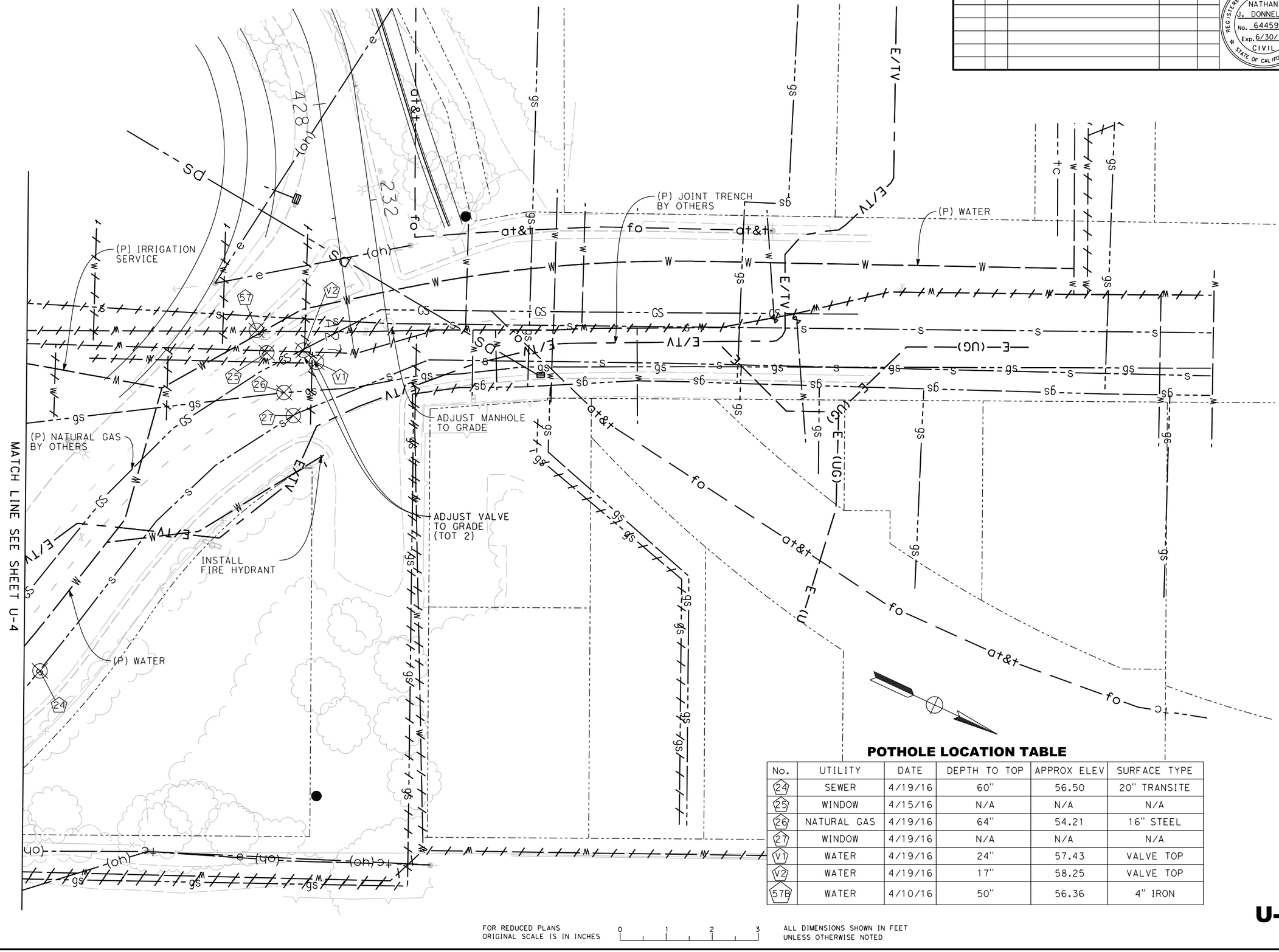

POTHOLE LOCATION TABLE

No.	UTILITY	DATE	DEPTH TO TOP	APPROX ELEV	SURFACE TYPE
24	SEWER	4/19/16	60"	56.50	20" TRANSITE
25	WINDOW	4/15/16	N/A	N/A	N/A
26	NATURAL GAS	4/19/16	64"	54.21	16" STEEL
27	WINDOW	4/19/16	N/A	N/A	N/A
V1	WATER	4/19/16	24"	57.43	VALVE TOP
V2	WATER	4/19/16	17"	58.25	VALVE TOP
57B	WATER	4/10/16	50"	56.36	4" IRON

U-5

FOR REDUCED PLANS
ORIGINAL SCALE IS IN INCHES
0 1 2 3
ALL DIMENSIONS SHOWN IN FEET
UNLESS OTHERWISE NOTED

8/15/2016
...\511\1858ka005.dgn

REVISION #	DATE:	DESCRIPTION AND SHEET NO.:	APPROVED BY:	DATE:

REGISTERED PROFESSIONAL ENGINEER
NATHAN J. DONNELLY
No. 64459
Exp. 6/30/17
CIVIL
STATE OF CALIFORNIA

PLAN SCALE: 1"=20'
PROFILE SCALE:
HORIZ:
VERT:

CONTRACT NO: 17-XX
DESIGNED: N. DONNELLY
DRAWN: E. ESPINOZA
CHECKED:
RECORD DRAWING: DATE:

DOKKEN ENGINEERING
110 BLUE RAVINE ROAD #200
FOLSOM, CA 95630
PHONE: (916) 858-0642
FAX: (916) 858-0643

CITY OF
YUBA CITY

5TH STREET BRIDGE REPLACEMENT
UTILITY PLAN

FOR REDUCED PLANS
ORIGINAL SCALE IS IN INCHES
0 1 2 3

ALL DIMENSIONS SHOWN IN FEET
UNLESS OTHERWISE NOTED

U-6

SHEET NO.
1
OF
4

8/15/2016
...\511\1858ka006.dgn

REVISION #	DATE:	DESCRIPTION AND SHEET NO.:	APPROVED BY:	DATE:

REGISTERED PROFESSIONAL ENGINEER
NATHAN J. DONNELLY
No. 64459
Exp. 6/30/17
CIVIL
STATE OF CALIFORNIA

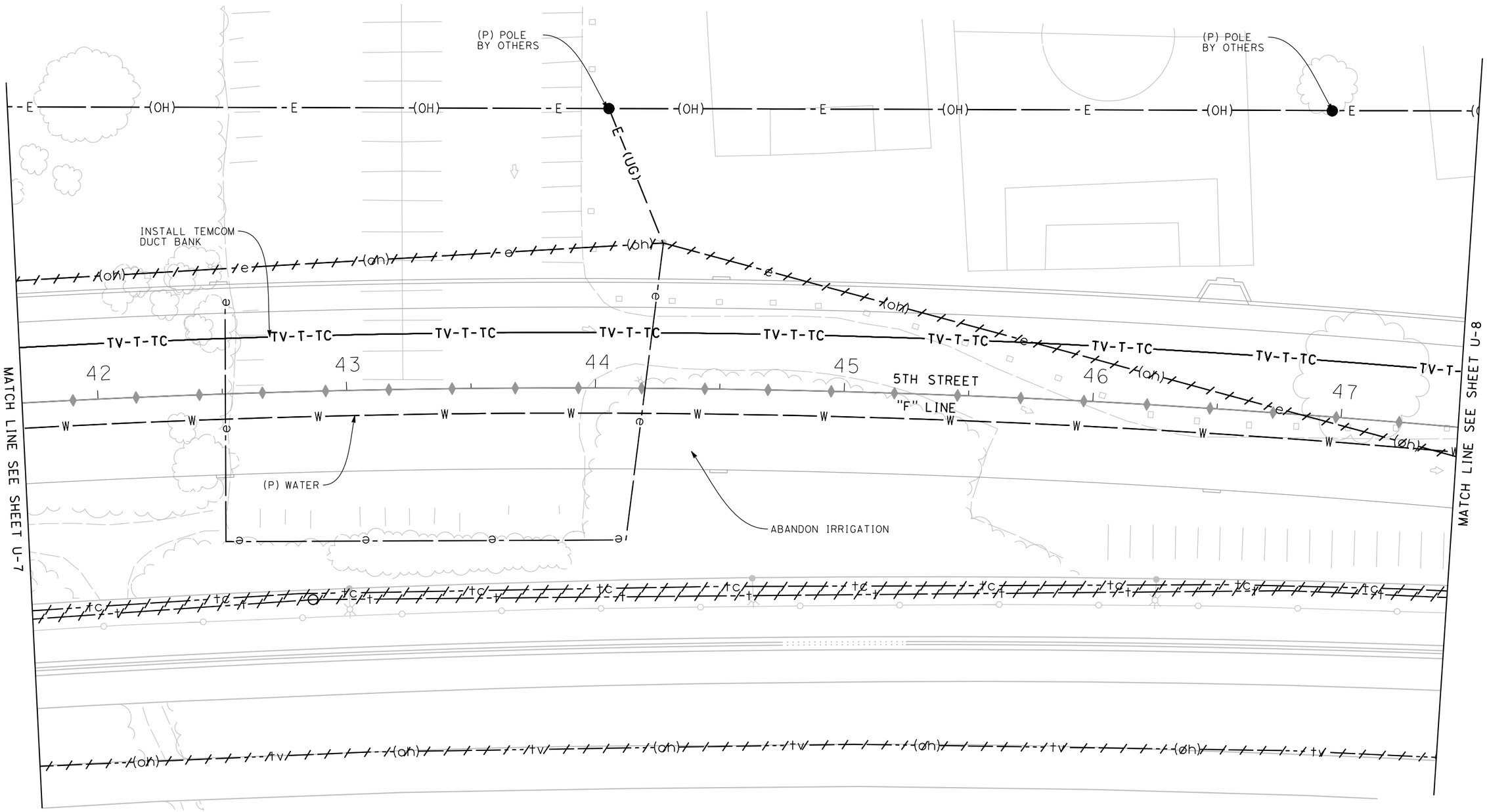

U-7

FOR REDUCED PLANS ORIGINAL SCALE IS IN INCHES 0 1 2 3 ALL DIMENSIONS SHOWN IN FEET UNLESS OTHERWISE NOTED

PLAN SCALE: 1"=20'
PROFILE SCALE:
HORIZ:
VERT:

CONTRACT NO: 17-XX
DESIGNED: N. DONNELLY
DRAWN: E. ESPINOZA
CHECKED:
RECORD DRAWING: DATE:

DOKKEN ENGINEERING
110 BLUE RAVINE ROAD 7200
FOLSOM, CA 95630
PHONE: (916) 858-0642
FAX: (916) 858-0643

CITY OF YUBA CITY

5TH STREET BRIDGE REPLACEMENT

UTILITY PLAN

SHEET NO. 1 OF 4

8/15/2016

...\511\1858ka007.dgn

REVISION #	DATE	DESCRIPTION AND SHEET NO.	APPROVED BY	DATE

REGISTERED PROFESSIONAL ENGINEER
NATHAN J. DONNELLY
No. 64459
Exp. 6/30/17
CIVIL
STATE OF CALIFORNIA

(P) POLE BY OTHERS

(P) FIBER OPTIC BY OTHERS

INSTALL TELCOM DUCT BANK

(P) WATER

ABANDON IRRIGATION

(P) SEWER

(P) WATER

5TH STREET

"F" LINE

SPRINT

MATCH LINE SEE SHEET U-7

MATCH LINE SEE SHEET U-9

48 49 50 51 52 53

U-8

FOR REDUCED PLANS ORIGINAL SCALE IS IN INCHES 0 1 2 3

ALL DIMENSIONS SHOWN IN FEET UNLESS OTHERWISE NOTED

8/15/2016

...\511\1858ka008.dgn

PLAN SCALE: 1"=20'
PROFILE SCALE:
HORIZ:
VERT:

CONTRACT NO: 17-XX
DESIGNED: N. DONNELLY
DRAWN: E. ESPINOZA
CHECKED:
RECORD DRAWING:
DATE:

DOKKEN ENGINEERING
110 BLUE RAVINE ROAD #200
FOLSOM, CA 95630
PHONE: (916) 858-0642
FAX: (916) 858-0643

CITY OF YUBA CITY

5TH STREET BRIDGE REPLACEMENT

UTILITY PLAN

SHEET NO. 1 OF 4

POTHOLE LOCATION TABLE

No.	UTILITY	DATE	APPROX DEPTH	APPROX ELEV	SURFACE TYPE
28	FIBER OPTIC	4/19/16	28"	76.80	1" PLASTIC
29A	WATER	4/21/16	17"	80.81	4" PVC
29B	SEWER	4/21/16	30"	79.73	4" PVC
30A	WATER	4/21/16	17"	77.06	4" PVC
30B	SEWER	4/21/16	30"	75.98	4" PVC
31	ELECTRIC	4/19/16	38"	67.88	1.5" PLASTIC
32A	WATER	4/21/16	25"	65.20	4" PVC
32B	SEWER	4/21/16	46"	63.45	4" PVC
33	FIBER OPTIC	4/21/16	24"	61.24	CLAY
34	ELECTRIC	4/22/16	36"	58.46	1.5" PLASTIC
35	WATER	4/21/16	27"	58.15	4" PVC
37	FIBER OPTIC	4/21/16	30"	58.62	STEEL
38	NATURAL GAS	4/21/16	22"	56.60	4" STEEL
57B	COMMUNICATION	4/10/16	27"	58.56	1" PLASTIC

REVISION #	DATE:	DESCRIPTION AND SHEET NO.:	APPROVED BY:	DATE:

REGISTERED PROFESSIONAL ENGINEER
NATHAN J. DONNELLY
No. 64459
Exp. 6/30/17
CIVIL
STATE OF CALIFORNIA

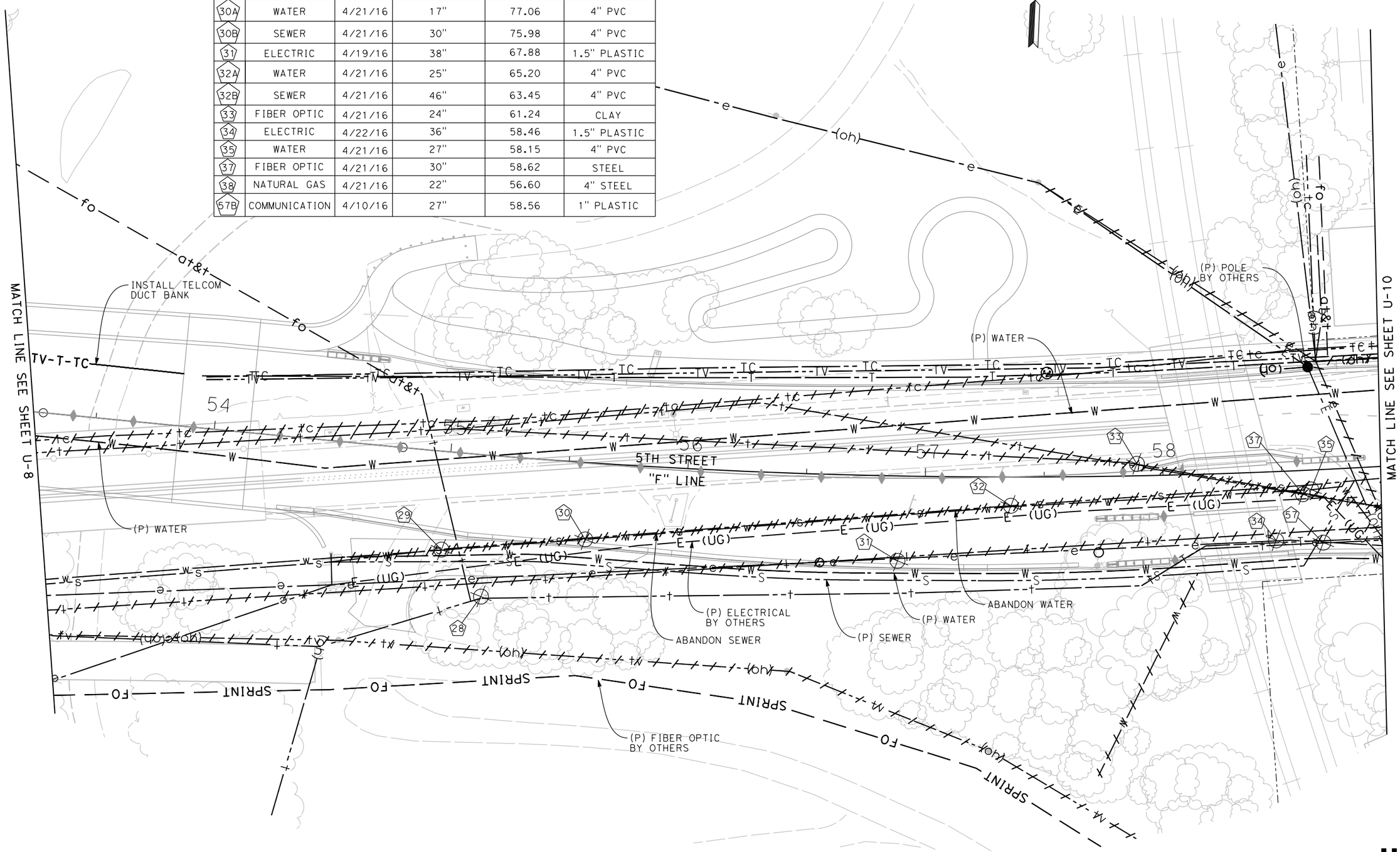

U-9

FOR REDUCED PLANS
ORIGINAL SCALE IS IN INCHES
0 1 2 3
ALL DIMENSIONS SHOWN IN FEET
UNLESS OTHERWISE NOTED

PLAN SCALE: 1"=20'
PROFILE SCALE:
HORIZ:
VERT:

CONTRACT NO: 17-XX
DESIGNED: N. DONNELLY
DRAWN: E. ESPINOZA
CHECKED:
RECORD DRAWING:
DATE:

DOKKEN ENGINEERING
110 BLUE RAVINE ROAD 7200
FOLSOM, CA 95630
PHONE: (916) 858-0642
FAX: (916) 858-0643

CITY OF YUBA CITY

5TH STREET BRIDGE REPLACEMENT
UTILITY PLAN

SHEET NO. 1 OF 4

8/15/2016

...\511\1858ca009.dgn

REVISION #	DATE:	DESCRIPTION AND SHEET NO.:	APPROVED BY:	DATE:

REGISTERED PROFESSIONAL ENGINEER
NATHAN J. DONNELLY
No. 64459
Exp. 6/30/17
CIVIL
STATE OF CALIFORNIA

POTHOLE LOCATION TABLE

No.	UTILITY	DATE	APPROX DEPTH	APPROX ELEV	SURFACE TYPE
38	NATURAL GAS	4/21/16	22"	56.60	4" STEEL
39	WATER	4/21/16	32"	55.68	1.5" COPPER
40A	WATER	4/10/16	22"	56.23	4" STEEL
40B	FIBER OPTIC	4/10/16	51"	53.81	4" CLAY
41	WATER	4/10/16	45"	55.01	1" STEEL
42	NATURAL GAS	4/10/16	50"	54.65	6" STEEL
43	NATURAL GAS	4/20/16	35"	55.30	4" STEEL
46	NATURAL GAS	4/20/16	21"	56.09	0.75" STEEL
47	WATER	4/10/16	26"	56.60	4" STEEL
48	WATER	4/10/16	53"	54.36	8" STEEL
50	NATURAL GAS	4/20/16	25"	56.11	4" STEEL
60	FIBER OPTIC	4/22/16	55"	53.50	1.5" HDPE
61	FIBER OPTIC	4/22/16	32"	55.31	8" STEEL

MATCH LINE A-A SEE SHEET U-11

MATCH LINE B-B SEE SHEET U-11

MATCH LINE SEE SHEET U-9

(P) AT&T VAULT BY OTHERS

(P) WATER BY OTHERS

(P) WATER BY OTHERS

(P) FIRE HYDRANT BY OTHERS

(P) POLE BY OTHERS

(P) NATURAL GAS BY OTHERS

J STREEET

"J" LINE

5TH STREET
"F" LINE

ADJUST MANHOLE TO GRADE (TOT 6)

794

793

764

761

59 60 61 62 63 64

FOR REDUCED PLANS ORIGINAL SCALE IS IN INCHES

0 1 2 3

ALL DIMENSIONS SHOWN IN FEET UNLESS OTHERWISE NOTED

U-10

PLAN SCALE: 1"=20'
PROFILE SCALE:
HORIZ:
VERT:

CONTRACT NO: 17-XX
DESIGNED: N. DONNELLY
DRAWN: E. ESPINOZA
CHECKED:
RECORD DRAWING:
DATE:

DOKKEN ENGINEERING
110 BLUE RAVINE ROAD #200
FOLSOM, CA 95630
PHONE: (916) 858-0642
FAX: (916) 985-1845

CITY OF YUBA CITY

5TH STREET BRIDGE REPLACEMENT

UTILITY PLAN

SHEET NO. 1 OF 4

8/15/2016

...\511\1858ka010.dgn

POTHOLE LOCATION TABLE

No.	UTILITY	DATE	APPROX DEPTH	APPROX ELEV	SURFACE TYPE
44	NATURAL GAS	4/20/16	19"	56.83	1" STEEL
45	NATURAL GAS	4/20/16	15"	57.98	0.75" STEEL

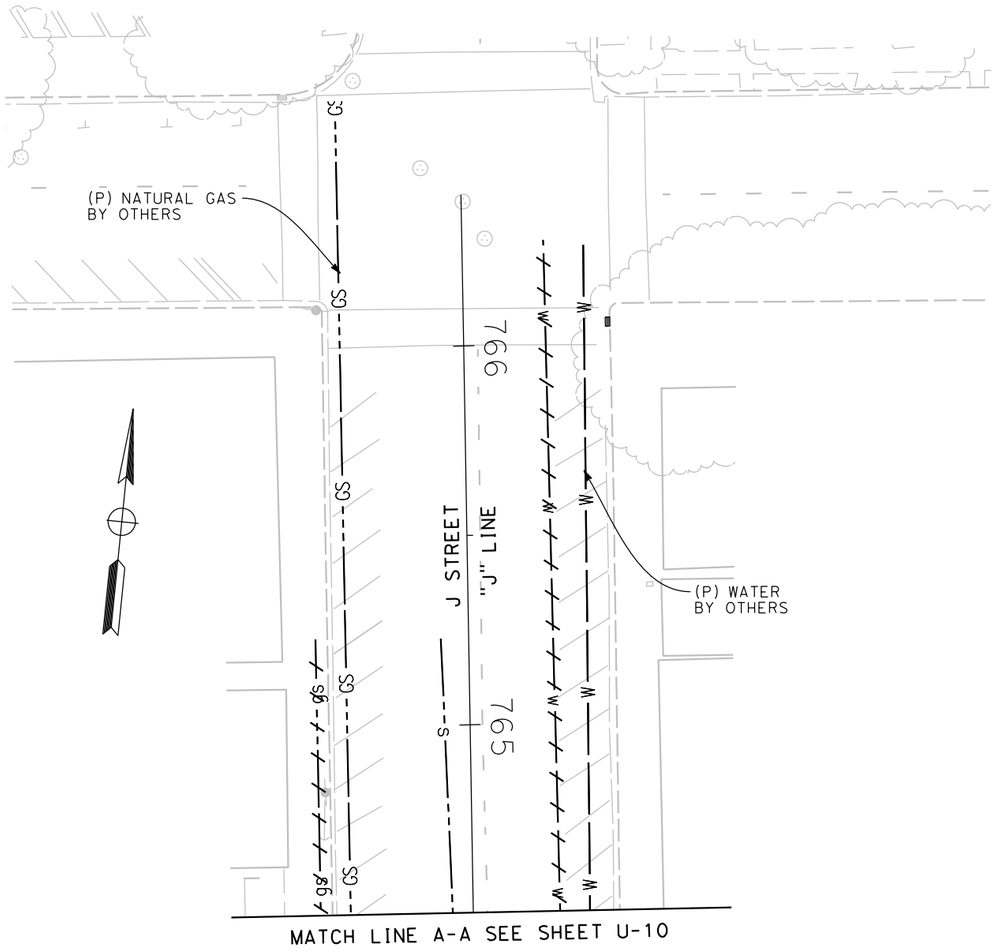

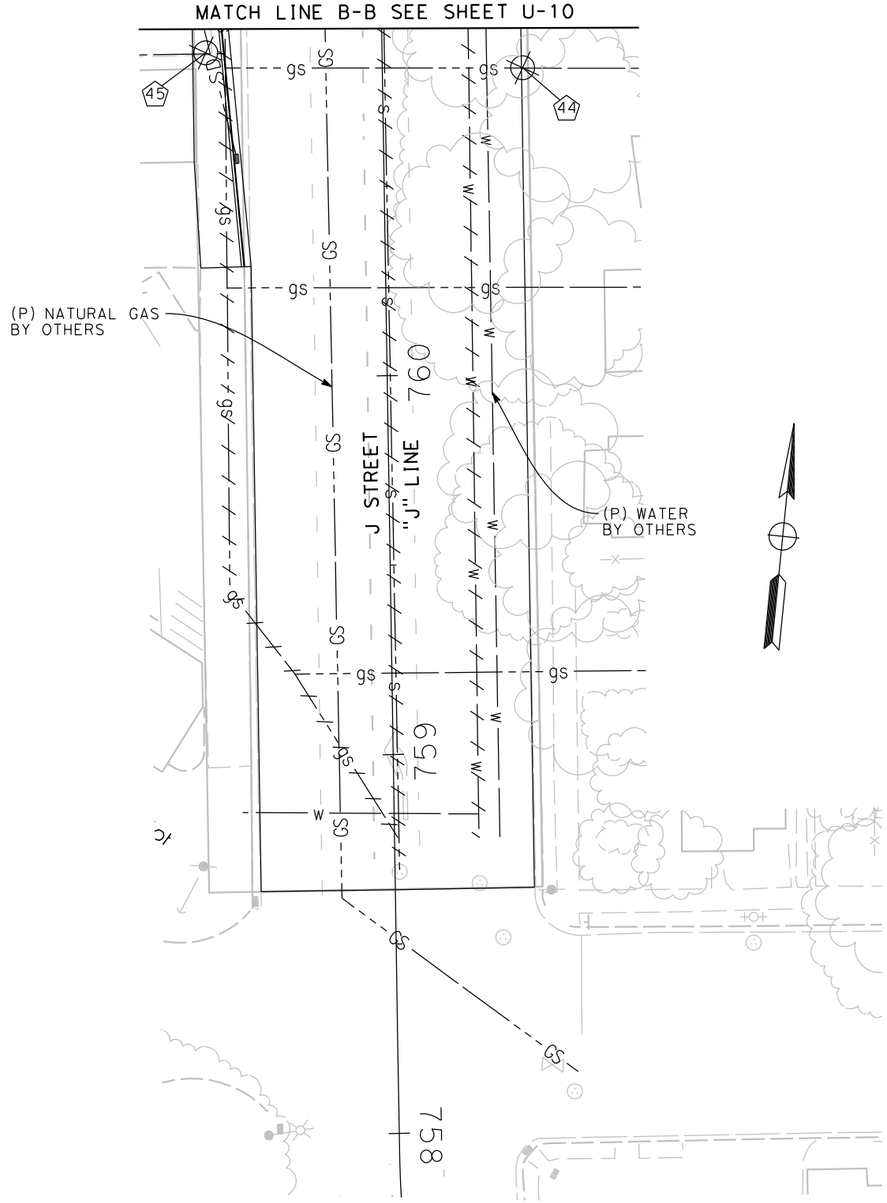

REVISION #	DATE:	DESCRIPTION AND SHEET NO.:	APPROVED BY:	DATE:

REGISTERED PROFESSIONAL ENGINEER
NATHAN J. DONNELLY
No. 64459
Exp. 6/30/17
CIVIL
STATE OF CALIFORNIA

PLAN SCALE: 1"=20'
PROFILE SCALE:
HORIZ:
VERT:

CONTRACT NO: 17-XX
DESIGNED: N. DONNELLY
DRAWN: E. ESPINOZA
CHECKED:
RECORD DRAWING: DATE:

DOKKEN ENGINEERING
110 BLUE RAVINE ROAD #200
FOLSOM, CA 95630
PHONE: (916) 858-0642
FAX: (916) 985-1845

CITY OF YUBA CITY

5TH STREET BRIDGE REPLACEMENT

UTILITY PLAN

SHEET NO. 1 OF 4

U-11

FOR REDUCED PLANS
ORIGINAL SCALE IS IN INCHES
0 1 2 3
ALL DIMENSIONS SHOWN IN FEET
UNLESS OTHERWISE NOTED

8/15/2016

...\511\1858ka011.dgn

REVISION #	DATE:	DESCRIPTION AND SHEET NO.:	APPROVED BY:	DATE:

REGISTERED PROFESSIONAL ENGINEER
NATHAN J. DONNELLY
No. 64459
Exp. 6/30/17
CIVIL
STATE OF CALIFORNIA

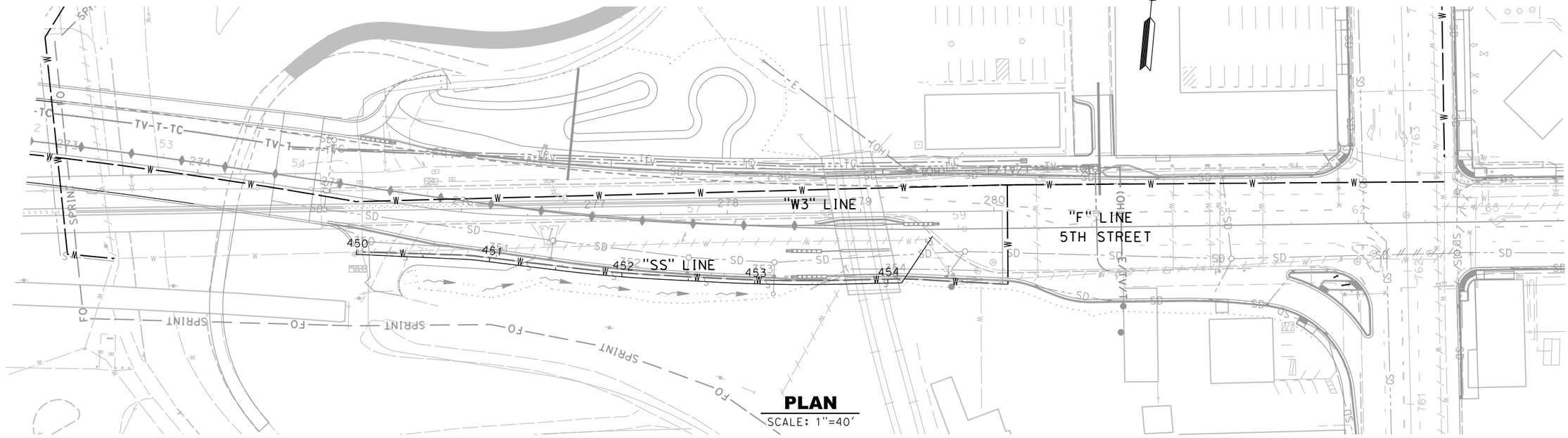

PLAN
SCALE: 1"=40'

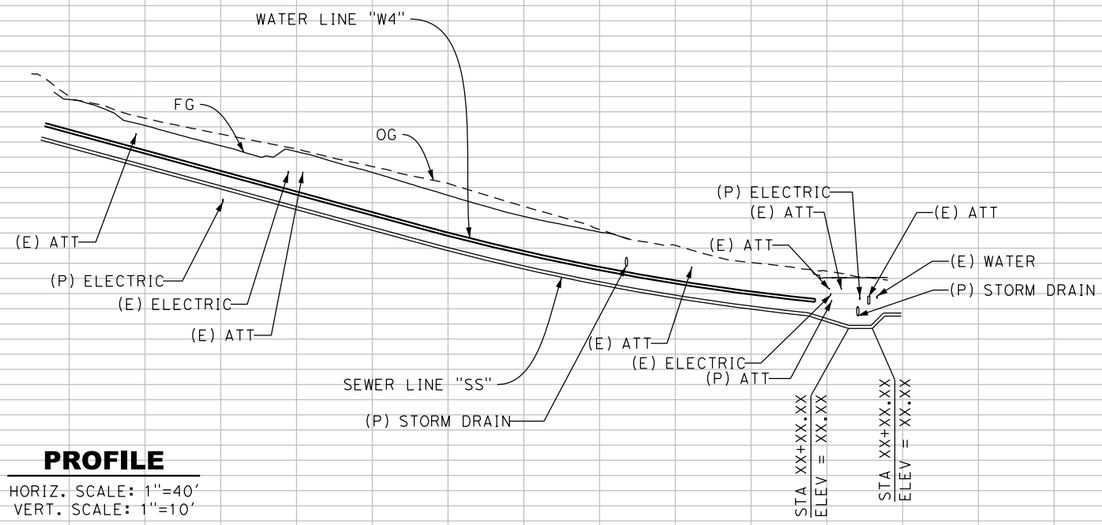

PROFILE
HORIZ. SCALE: 1"=40'
VERT. SCALE: 1"=10'

90 80 70 60 50 40

451+00 453+00 455+00

"SS" LINE
SANITARY SEWER PLAN AND PROFILE

UD-1

FOR REDUCED PLANS
ORIGINAL SCALE IS IN INCHES
0 1 2 3
ALL DIMENSIONS SHOWN IN FEET
UNLESS OTHERWISE NOTED

8/15/2016
...\511\858kb001.dgn

PLAN SCALE:
PROFILE SCALE:
HORIZ:
VERT:

CONTRACT NO: **17-XX**
DESIGNED: N. DONNELLY
DRAWN: E. ESPINOZA
CHECKED:
RECORD DRAWING:
DATE:

DOKKEN ENGINEERING
110 BLUE RAVINE ROAD #200
FOLSOM, CA 95630
PHONE: (916) 858-0642
FAX: (916) 985-1845

CITY OF **YUBA CITY**

5TH STREET BRIDGE REPLACEMENT

UTILITY DETAILS

SHEET NO.
OF
215

REVISION #	DATE:	DESCRIPTION AND SHEET NO.:	APPROVED BY:	DATE:

REGISTERED PROFESSIONAL ENGINEER
NATHAN J. DONNELLY
No. 64459
Exp. 6/30/17
CIVIL
STATE OF CALIFORNIA

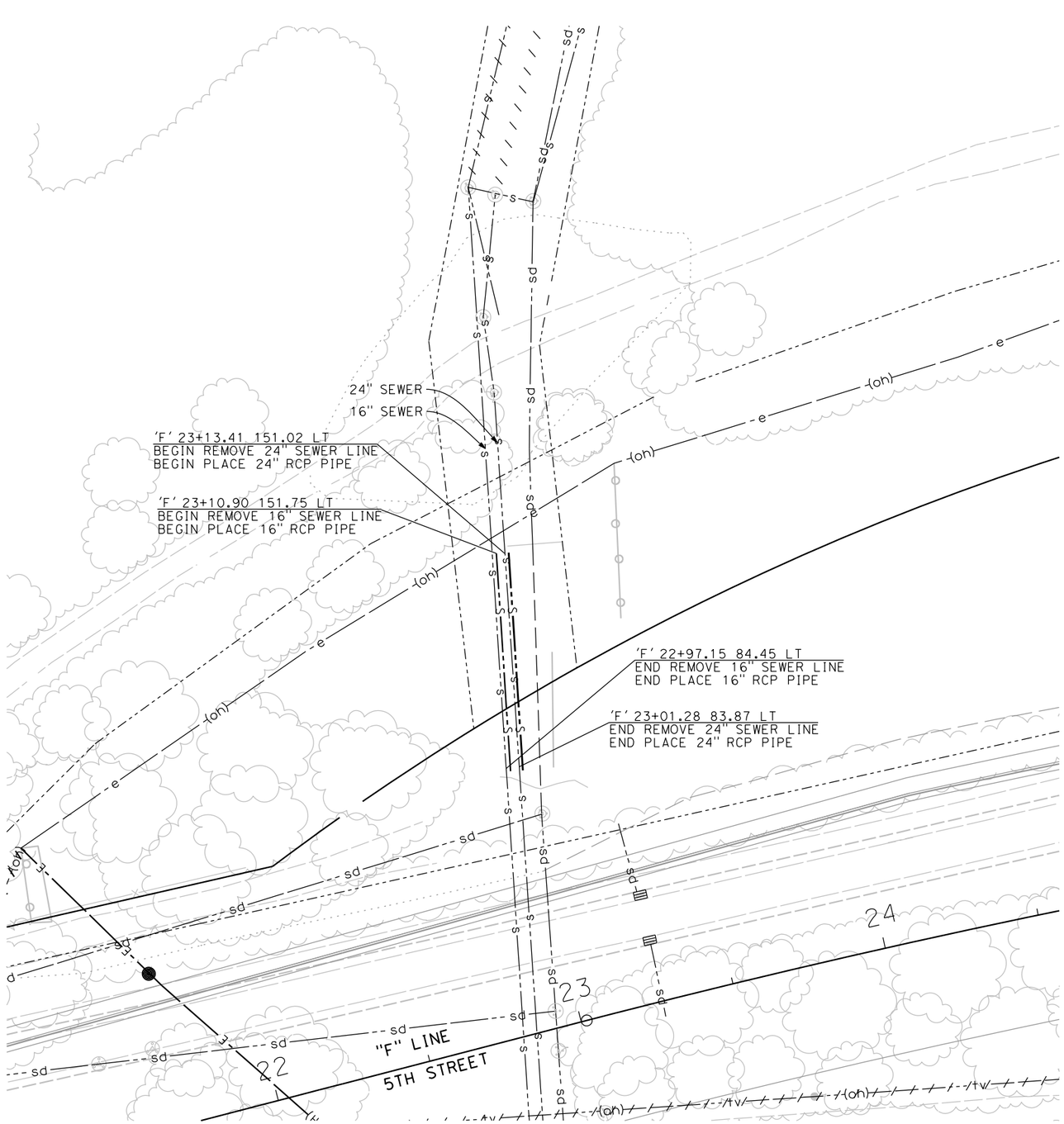

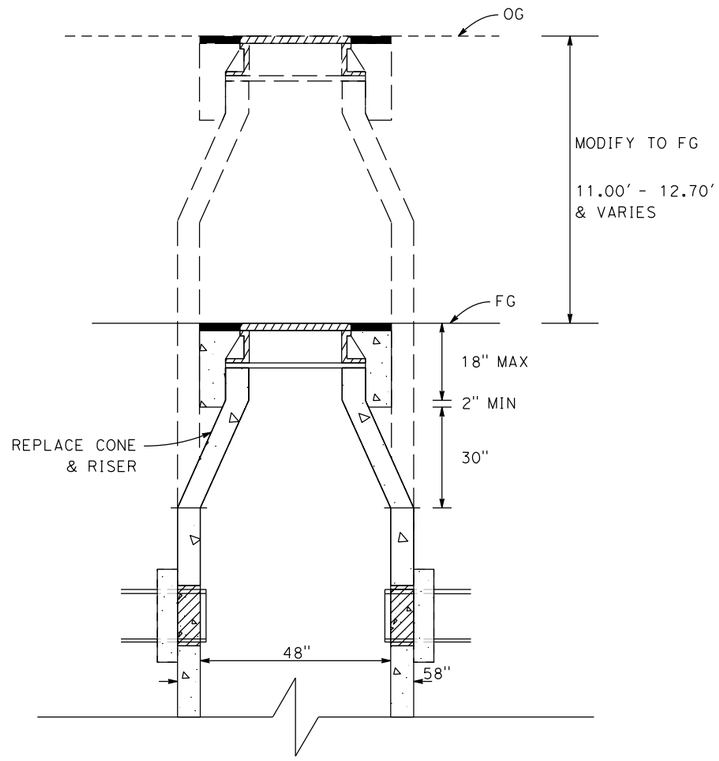

MODIFY MANHOLE DETAIL
SCALE: 1"=XX'

GILSIZER SEWER LINE MODIFICATIONS
UD-2

FOR REDUCED PLANS
ORIGINAL SCALE IS IN INCHES
0 1 2 3
ALL DIMENSIONS SHOWN IN FEET
UNLESS OTHERWISE NOTED

PLAN SCALE:
PROFILE SCALE:
HORIZ:
VERT:

CONTRACT NO: 17-XX
DESIGNED: N. DONNELLY
DRAWN: E. ESPINOZA
CHECKED: N. DONNELLY
RECORD DRAWING: DATE:

DOKKEN ENGINEERING
110 BLUE RAVINE ROAD #200
FOLSOM, CA 95630
PHONE: (916) 858-0642
FAX: (916) 985-1845

CITY OF YUBA CITY

5TH STREET BRIDGE REPLACEMENT
UTILITY DETAILS

SHEET NO.
OF
215

8/15/2016
...\511\1858kb002.dgn

CURVE DATA				
No	RADIUS (ft)	DELTA	TANGENT (ft)	LENGTH (ft)
1	600.00	2°9'40"	11.32	22.63
2	1323.00	14°27'18"	167.78	333.78
3	300.00	5°54'39"	15.49	30.95

REVISION #	DATE:	DESCRIPTION AND SHEET NO.:	APPROVED BY:	DATE:

REGISTERED PROFESSIONAL ENGINEER
NATHAN J. DONNELLY
No. 64459
Exp. 6/30/17
CIVIL
STATE OF CALIFORNIA

"W1" 133+60.93 AP BC
"F" 18+40.82 7.97 LT
INSTALL 45° BEND

"W1" 132+99.94 EC
"F" 17+85.32 16.94 RT

"W1" 132+77.31 BC
"F" 17+64.69 26.22 RT

"W1" 132+67.28 AP
"F" 17+55.46 30.17 RT
INSTALL 45° BEND

"W1" 136+94.70 AP EC
"F" 21+76.19 8.04 LT
INSTALL 45° BEND

"W1" 137+67.82 AP EC
"F" 22+09.02 57.24 RT
INSTALL 45° BEND

"W1" 138+66.72 AP
"F" 23+04.89 81.87 RT
INSTALL 90° TEE

"F" LINE
BRIDGE STREET

"F" LINE
5TH STREET

"W1" LINE

"B" LINE
BRIDGE STREET

"W1" LINE

MATCH LINE "W1" 140+20.00
SEE SHEET UD-4

"W1" 138+66.72 AP
"F" 22+95.51 114.94 RT
"B" 523+11.34 13.34 RT
INSTALL 90° TEE

PLAN
SCALE: 1"=40'

(E) GAS
(P) GAS
(E) STORM DRAIN
(E) AT&T
OG
FG
(P) STORM DRAIN
(E) SEWER
"W1" XX+XX.XX
Elev = XX.XX

MATCH LINE "W1" 140+20.00
SEE SHEET UD-4

PROFILE
HORIZ. SCALE: 1"=40'
VERT. SCALE: 1"=10'

131+00 133+00 135+00 137+00 139+00

"W1" LINE
WATER LINE PLAN AND PROFILE

UD-3

FOR REDUCED PLANS
ORIGINAL SCALE IS IN INCHES
0 1 2 3
ALL DIMENSIONS SHOWN IN FEET
UNLESS OTHERWISE NOTED

8/15/2016
...\51\1858kb003.dgn

PLAN SCALE:
PROFILE SCALE:
HORIZ:
VERT:

CONTRACT NO: 17-XX
DESIGNED: N. DONNELLY
DRAWN: E. ESPINOZA
CHECKED:
RECORD DRAWING:
DATE:

DOKKEN ENGINEERING
110 BLUE RAVINE ROAD #200
FOLSOM, CA 95630
PHONE: (916) 858-0642
FAX: (916) 858-0643

CITY OF YUBA CITY

5TH STREET BRIDGE REPLACEMENT

UTILITY PLAN

SHEET NO. 3 OF 215

REVISION #	DATE	DESCRIPTION AND SHEET NO.	APPROVED BY	DATE

REGISTERED PROFESSIONAL ENGINEER
NATHAN J. DONNELLY
No. 64459
Exp. 6/30/17
CIVIL
STATE OF CALIFORNIA

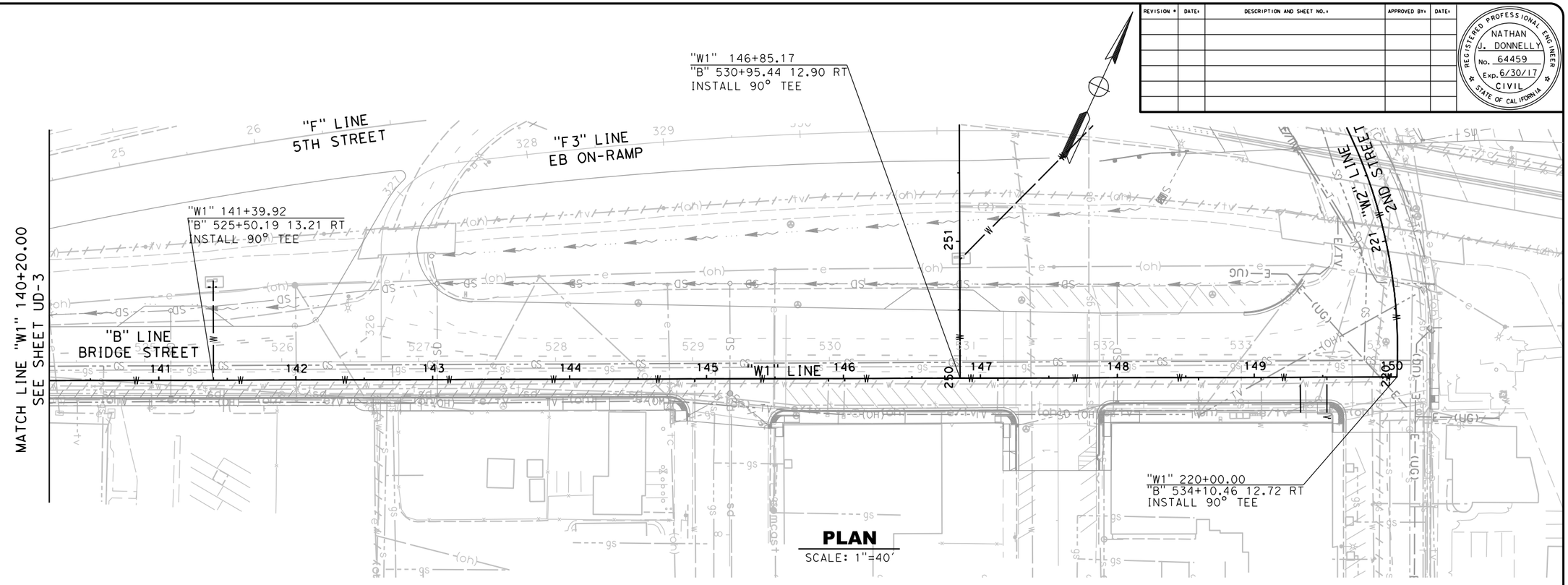

PLAN
SCALE: 1"=40'

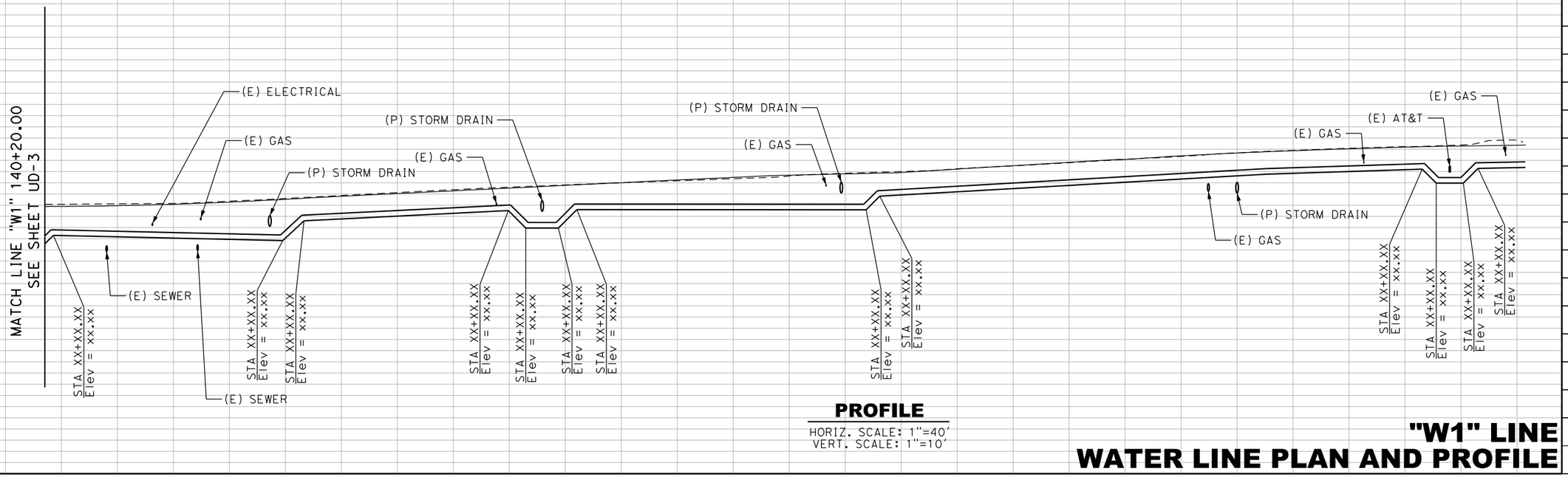

PROFILE
HORIZ. SCALE: 1"=40'
VERT. SCALE: 1"=10'

"W1" LINE
WATER LINE PLAN AND PROFILE

UD-4

FOR REDUCED PLANS
ORIGINAL SCALE IS IN INCHES
0 1 2 3
ALL DIMENSIONS SHOWN IN FEET
UNLESS OTHERWISE NOTED

8/15/2016
...\5111\1858kb004.dgn

PLAN SCALE:
PROFILE SCALE:
HORIZ:
VERT:

CONTRACT NO: 17-XX
DESIGNED: N. DONNELLY
DRAWN: E. ESPINOZA
CHECKED:
RECORD DRAWING:
DATE:

DOKKEN ENGINEERING
110 BLUE RAVINE ROAD #200
FOLSOM, CA 95630
PHONE: (916) 858-0642
FAX: (916) 985-1845

CITY OF YUBA CITY

5TH STREET BRIDGE REPLACEMENT

SHEET NO.
4
OF
215

CURVE DATA				
No	RADIUS (ft)	DELTA	TANGENT (ft)	LENGTH (ft)
1	368.76	53°24'13"	185.48	343.71
2	600.00	13°0'35"	68.41	136.24

REVISION #	DATE:	DESCRIPTION AND SHEET NO.:	APPROVED BY:	DATE:

REGISTERED PROFESSIONAL ENGINEER
NATHAN J. DONNELLY
No. 64459
Exp. 6/30/17
CIVIL
STATE OF CALIFORNIA

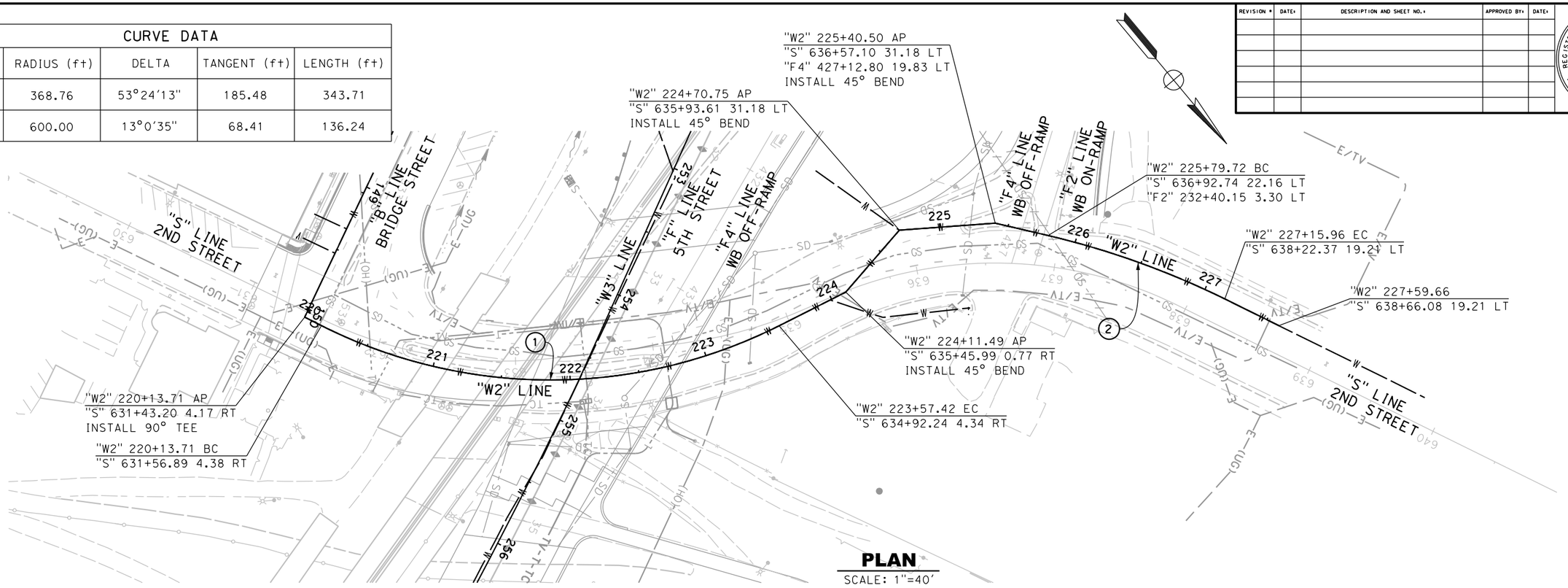

PLAN
SCALE: 1"=40'

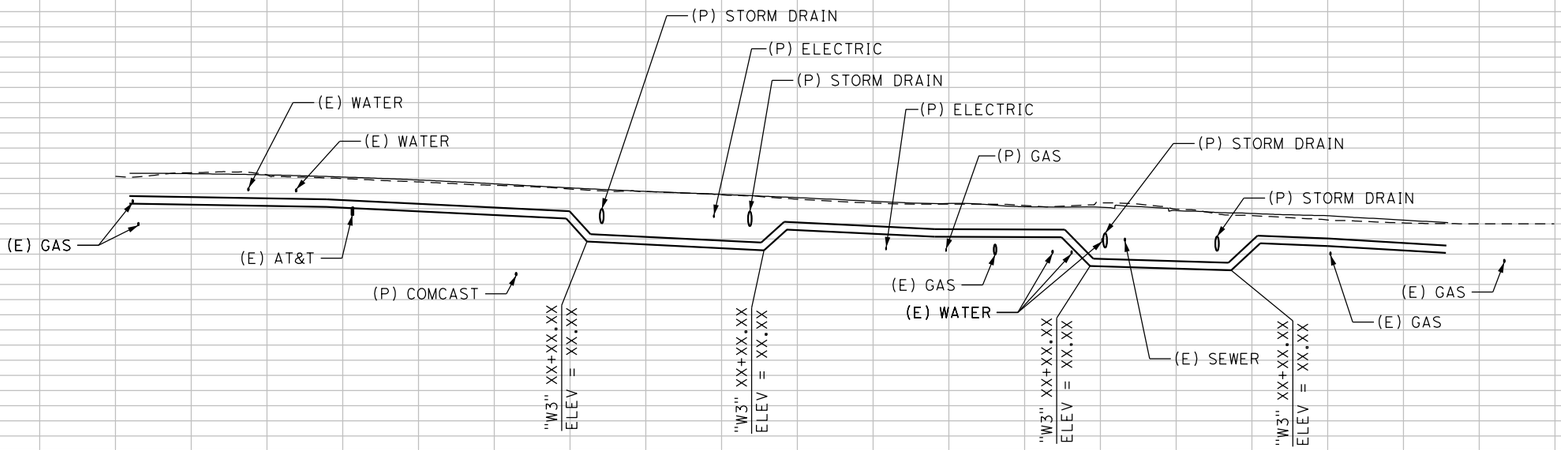

PROFILE
HORIZ. SCALE: 1"=40'
VERT. SCALE: 1"=10'

"W2" LINE
WATER LINE PLAN AND PROFILE

UD-5

FOR REDUCED PLANS
ORIGINAL SCALE IS IN INCHES
0 1 2 3
ALL DIMENSIONS SHOWN IN FEET
UNLESS OTHERWISE NOTED

8/15/2016
...\5111\858kb005.dgn

PLAN SCALE:
PROFILE SCALE: HORIZ: VERT:

CONTRACT NO: 17-XX
DESIGNED: N. DONNELLY
DRAWN: E. ESPINOZA
CHECKED:
RECORD DRAWING: DATE:

DOKKEN ENGINEERING
110 BLUE RAVINE ROAD #200
FOLSOM, CA 95630
PHONE: (916) 858-0642
FAX: (916) 985-1845

CITY OF YUBA CITY

5TH STREET BRIDGE REPLACEMENT
UTILITY PLAN

SHEET NO.
OF
4

REVISION #	DATE:	DESCRIPTION AND SHEET NO.:	APPROVED BY:	DATE:

REGISTERED PROFESSIONAL ENGINEER
NATHAN J. DONNELLY
No. 64459
Exp. 6/30/17
CIVIL
STATE OF CALIFORNIA

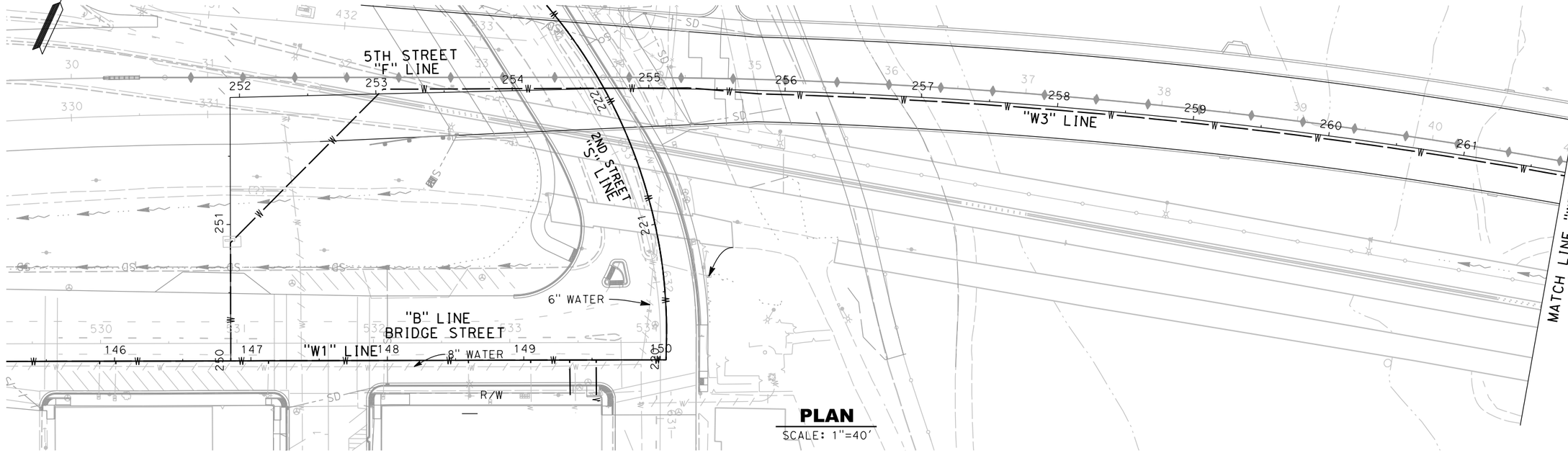

PLAN
SCALE: 1"=40'

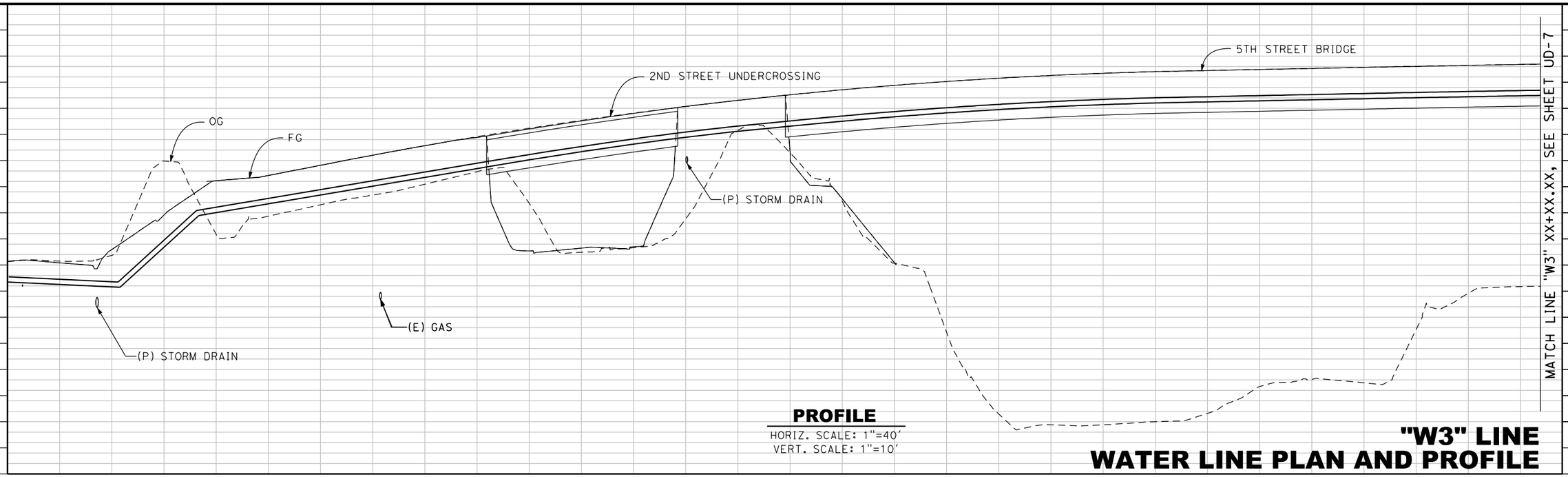

PROFILE
HORIZ. SCALE: 1"=40'
VERT. SCALE: 1"=10'

"W3" LINE
WATER LINE PLAN AND PROFILE

UD-6

FOR REDUCED PLANS
ORIGINAL SCALE IS IN INCHES
0 1 2 3
ALL DIMENSIONS SHOWN IN FEET
UNLESS OTHERWISE NOTED

8/15/2016
...\511\858kb006.dgn

PLAN SCALE:
PROFILE SCALE:
HORIZ:
VERT:

CONTRACT NO: 17-XX
DESIGNED: N. DONNELLY
DRAWN: E. ESPINOZA
CHECKED:
RECORD DRAWING:
DATE:

DOKKEN ENGINEERING
110 BLUE RAVINE ROAD #200
FOLSOM, CA 95630
PHONE: (916) 858-0642
FAX: (916) 985-1845

CITY OF YUBA CITY

5TH STREET BRIDGE REPLACEMENT
UTILITY DETAILS

SHEET NO.
OF
215

REVISION #	DATE:	DESCRIPTION AND SHEET NO.:	APPROVED BY:	DATE:

REGISTERED PROFESSIONAL ENGINEER
NATHAN J. DONNELLY
No. 64459
Exp. 6/30/17
CIVIL
STATE OF CALIFORNIA

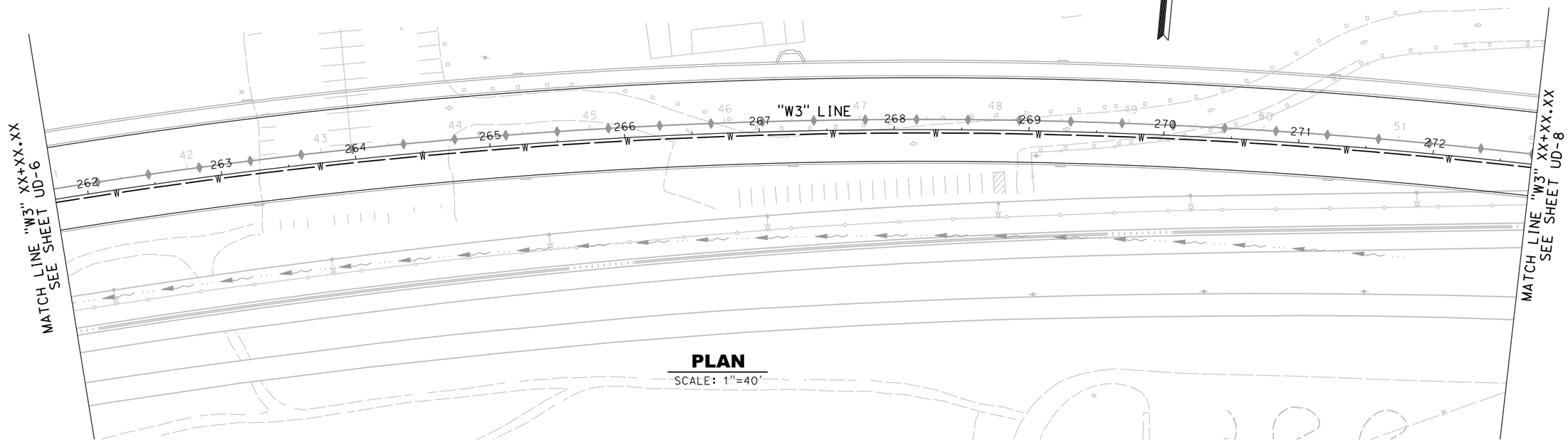

PLAN
SCALE: 1"=40'

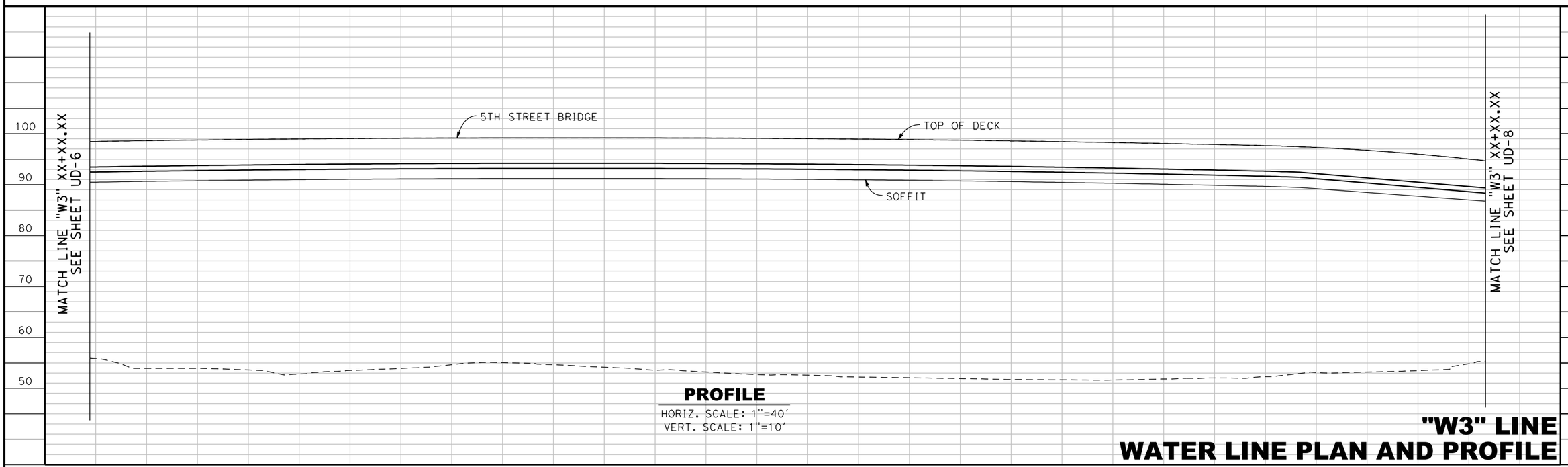

PROFILE
HORIZ. SCALE: 1"=40'
VERT. SCALE: 1"=10'

"W3" LINE
WATER LINE PLAN AND PROFILE

UD-7

FOR REDUCED PLANS
ORIGINAL SCALE IS IN INCHES
0 1 2 3
ALL DIMENSIONS SHOWN IN FEET
UNLESS OTHERWISE NOTED

PLAN SCALE:
PROFILE SCALE:
HORIZ:
VERT:

CONTRACT NO: 17-XX
DESIGNED: N. DONNELLY
DRAWN: E. ESPINOZA
CHECKED:
RECORD DRAWING: DATE:

DOKKEN ENGINEERING
110 BLUE RAVINE ROAD #200
FOLSOM, CA 95630
PHONE: (916) 858-0642
FAX: (916) 985-1845

CITY OF YUBA CITY

5TH STREET BRIDGE REPLACEMENT

UTILITY DETAILS

SHEET NO.
OF
215

8/15/2016

...\51\1858kb007.dgn

REVISION #	DATE:	DESCRIPTION AND SHEET NO.:	APPROVED BY:	DATE:

REGISTERED PROFESSIONAL ENGINEER
NATHAN J. DONNELLY
No. 64459
Exp. 6/30/17
CIVIL
STATE OF CALIFORNIA

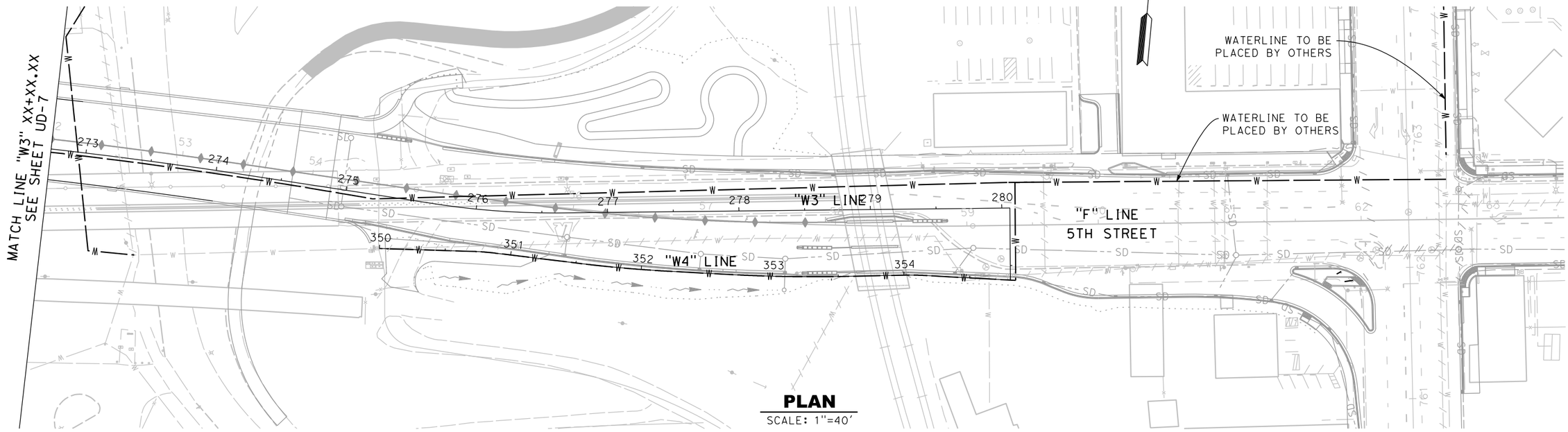

PLAN
SCALE: 1"=40'

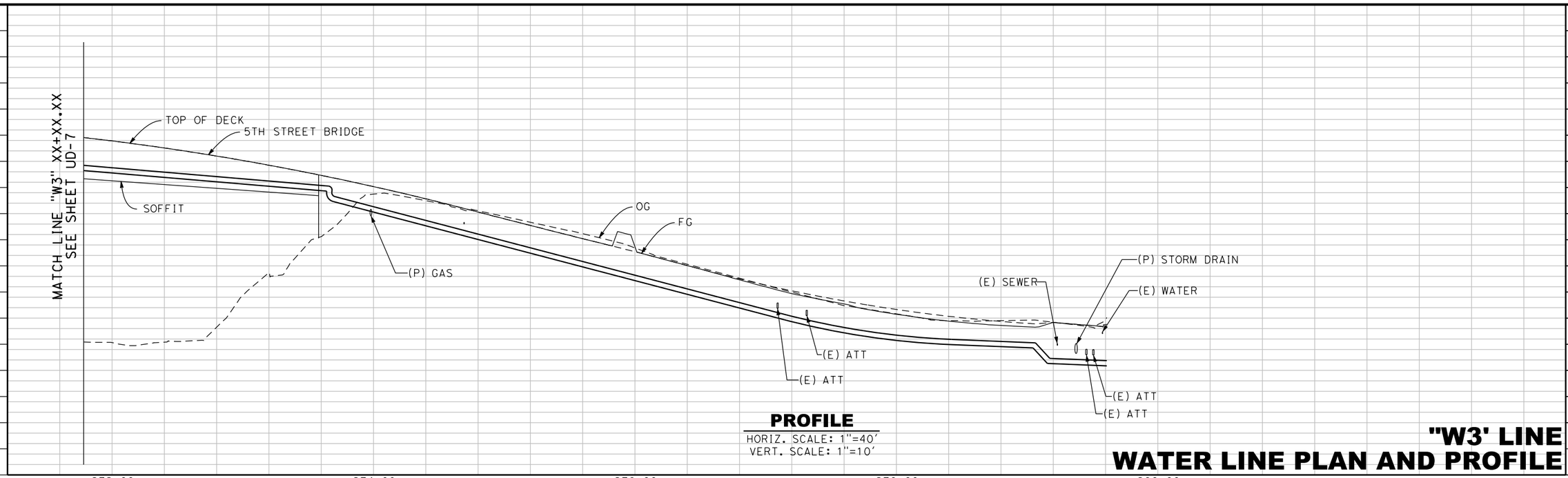

PROFILE
HORIZ. SCALE: 1"=40'
VERT. SCALE: 1"=10'

"W3' LINE
WATER LINE PLAN AND PROFILE

UD-8

FOR REDUCED PLANS
ORIGINAL SCALE IS IN INCHES
0 1 2 3
ALL DIMENSIONS SHOWN IN FEET
UNLESS OTHERWISE NOTED

8/15/2016
...\51\1858kb008.dgn

PLAN SCALE:
PROFILE SCALE:
HORIZ:
VERT:

CONTRACT NO: 17-XX
DESIGNED: N. DONNELLY
DRAWN: E. ESPINOZA
CHECKED:
RECORD DRAWING: DATE:

DOKKEN ENGINEERING
110 BLUE RAVINE ROAD #200
FOLSOM, CA 95630
PHONE: (916) 858-0642
FAX: (916) 985-1845

CITY OF YUBA CITY

5TH STREET BRIDGE REPLACEMENT
UTILITY DETAILS

SHEET NO.
OF
215

REVISION #	DATE	DESCRIPTION AND SHEET NO.	APPROVED BY	DATE

REGISTERED PROFESSIONAL ENGINEER
NATHAN J. DONNELLY
No. 64459
Exp. 6/30/17
CIVIL
STATE OF CALIFORNIA

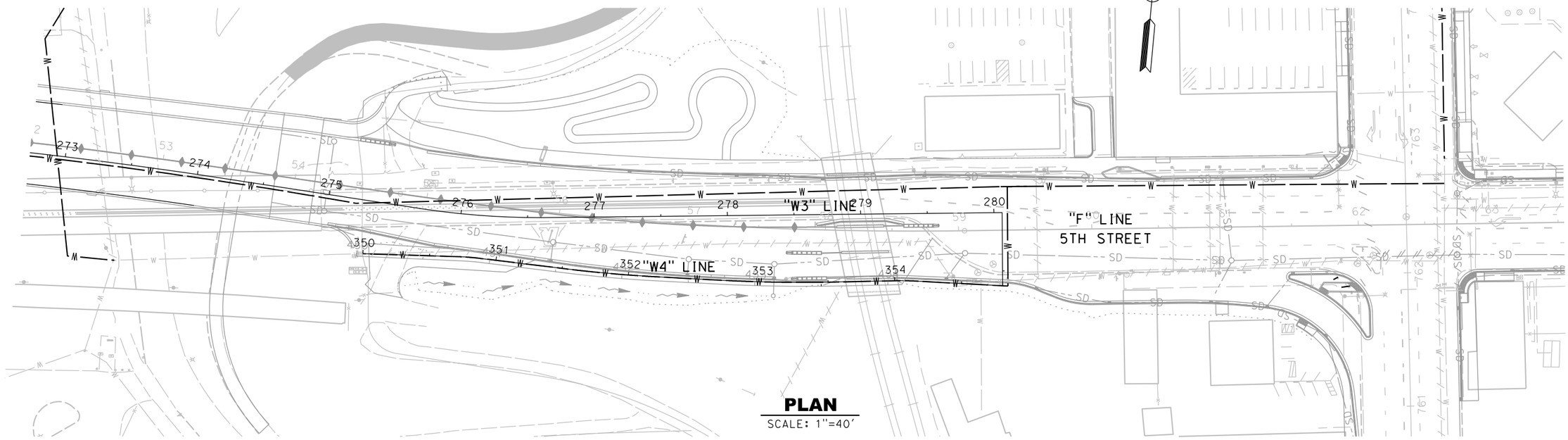

PLAN
SCALE: 1"=40'

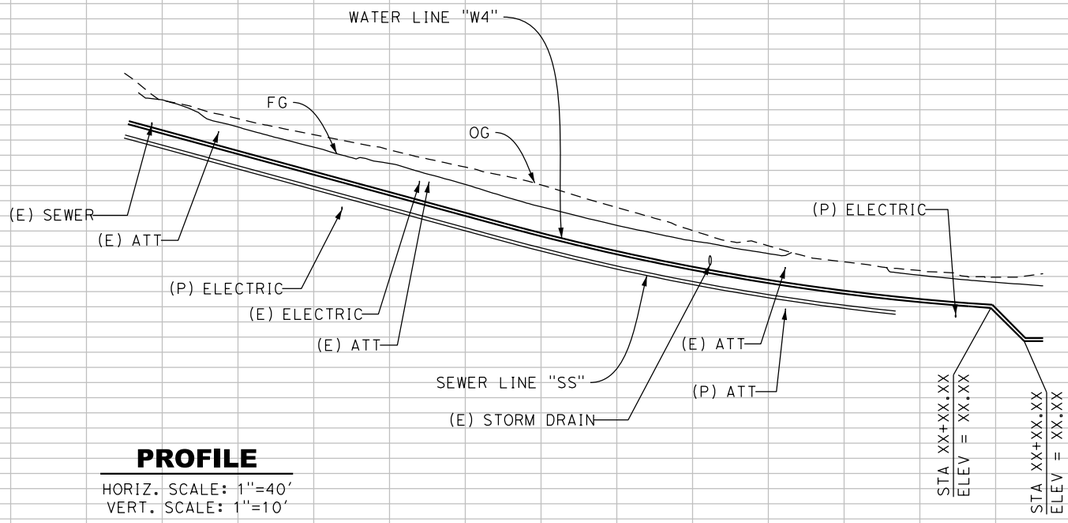

PROFILE
HORIZ. SCALE: 1"=40'
VERT. SCALE: 1"=10'

"W4' LINE
WATER LINE PLAN AND PROFILE

UD-9

FOR REDUCED PLANS
ORIGINAL SCALE IS IN INCHES
0 1 2 3
ALL DIMENSIONS SHOWN IN FEET
UNLESS OTHERWISE NOTED

PLAN SCALE:
PROFILE SCALE:
HORIZ:
VERT:

CONTRACT NO: 17-XX
DESIGNED: N. DONNELLY
DRAWN: E. ESPINOZA
CHECKED:
RECORD DRAWING: DATE:

DOKKEN ENGINEERING
110 BLUE RAVINE ROAD #200
FOLSOM, CA 95630
PHONE: (916) 858-0642
FAX: (916) 985-1845

CITY OF YUBA CITY

5TH STREET BRIDGE REPLACEMENT

UTILITY DETAILS

SHEET NO.
OF
215

8/15/2016
...\511\858kb009.dgn

REVISION #	DATE:	DESCRIPTION AND SHEET NO.:	APPROVED BY:	DATE:

REGISTERED PROFESSIONAL ENGINEER
NATHAN J. DONNELLY
No. 64459
Exp. 6/30/17
CIVIL
STATE OF CALIFORNIA

UTILITY QUANTITIES

ITEM	UNIT	LF
12" DUCTILE IRON PIPE	LF	4,916
4" PLASTIC PIPE	LF	1,446
2" PLASTIC PIPE (SCHEDULE 40)(SUPPLY LINE)	LF	148
RELOCATE BACKFLOW PREVENTER ASSEMBLY	EA	1
45°BEND (N)	EA	3
12" 90°TEE (N)	EA	2
12" AIR RELEASE VALVE	EA	3
16" REINFORCED CONCRETE PIPE	LF	72
24" REINFORCED CONCRETE PIPE	LF	72

(N)= NOT A PAY ITEM, FOR INFORMATION ONLY

FOR REDUCED PLANS
ORIGINAL SCALE IS IN INCHES

0 1 2 3

ALL DIMENSIONS SHOWN IN FEET
UNLESS OTHERWISE NOTED

UTILITY QUANTITIES
UQ-1

PLAN SCALE:
PROFILE SCALE:
HORIZ:
VERT:

CONTRACT NO: 17-XX
DESIGNED: N. DONNELLY
DRAWN: E. ESPINOZA
CHECKED:
RECORD DRAWING: DATE:

DOKKEN ENGINEERING
110 BLUE RAVINE ROAD #200
FOLSOM, CA 95630
PHONE: (916) 858-0642
FAX: (916) 858-0643

CITY OF YUBA CITY

5TH STREET BRIDGE REPLACEMENT
UTILITY QUANTITIES

SHEET NO.
OF
215

8/15/2016

...\5111\1858kc001.dgn

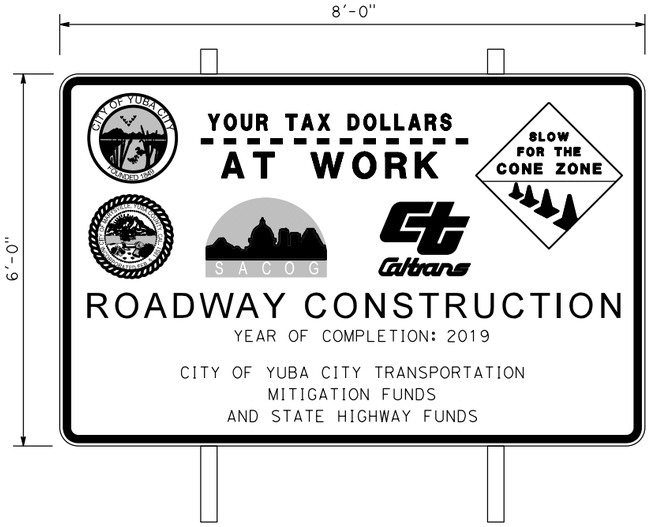

CONSTRUCTION PROJECT FUNDING IDENTIFICATION SIGN (CPFIS)

NO SCALE

CONSTRUCTION AREA SIGN QUANTITY TABLE

SIGN NO.	SIGN CODE	SIGN MESSAGE	PANEL SIZE (INCHES)	NO. OF POSTS AND SIZE (INCHES)	NO. OF SIGNS
(A)	W20-1	ROAD WORK AHEAD	36" X 36"	1 - 6" X 6"	4
(B)	G20-2	END ROAD WORK	36" X 18"	1 - 6" X 6"	4
(C)	CPFIS	CONSTRUCTION INFORMATION	96" X 72"	2 - 6" X 8"	4
(D)	C40(CA)	TRAFFIC FINES DOUBLED IN CONSTRUCTION ZONES	108" X 42"	2 - 6" X 6"	4
(E)	SP-2	BUSINESSES OPEN DURING CONSTRUCTION	36" X 24"	1 - 6" X 6"	4
(F)	CUSTOM	CAUTION - BRIDGE CONSTRUCTION LOW CLEARANCE AHEAD	48" X 60"	2 - 6" X 6"	4
(G)	CUSTOM	CAUTION - BRIDGE CONSTRUCTION UPSTREAM FROM RAMPS LOW CLEARANCE	48" X 48"	2 - 4" X 6"	2

REVISION #	DATE:	DESCRIPTION AND SHEET NO.:	APPROVED BY:	DATE:

REGISTERED PROFESSIONAL ENGINEER
NATHAN J. DONNELLY
No. 64459
Exp. 6/30/17
CIVIL
STATE OF CALIFORNIA

3'-0"

2'-0"

BUSINESSES OPEN DURING CONSTRUCTION

BRIDGE STREET

CITY OF YUBA CITY

DETAIL SP-2

NO SCALE

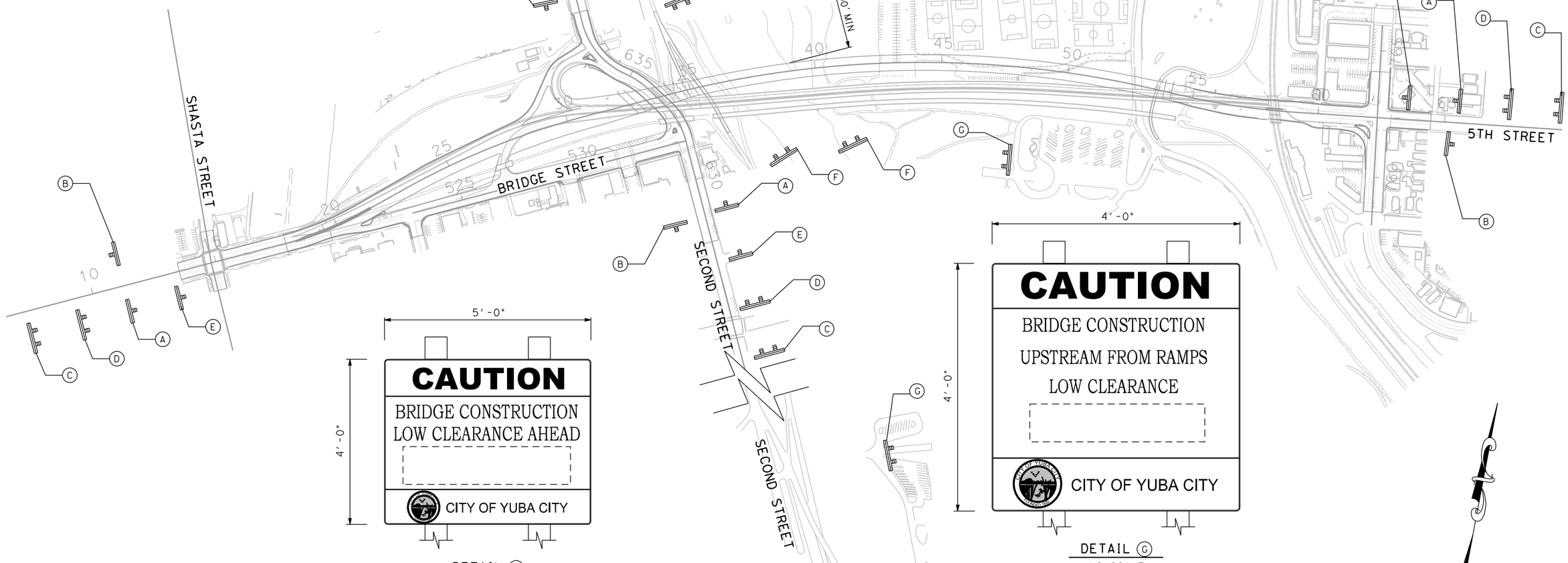

5'-0"

4'-0"

CAUTION

BRIDGE CONSTRUCTION
LOW CLEARANCE AHEAD

CITY OF YUBA CITY

DETAIL (F)

NO SCALE

4'-0"

4'-0"

CAUTION

BRIDGE CONSTRUCTION
UPSTREAM FROM RAMPS
LOW CLEARANCE

CITY OF YUBA CITY

DETAIL (G)

NO SCALE

FOR REDUCED PLANS
ORIGINAL SCALE IS IN INCHES

0 1 2 3

ALL DIMENSIONS SHOWN IN FEET
UNLESS OTHERWISE NOTED

CS-1

PLAN SCALE: 1"=200'
PROFILE SCALE:
HORIZ:
VERT:

CONTRACT NO: 17-XX
DESIGNED: N. DONNELLY
DRAWN: E. ESPINOZA
CHECKED:
RECORD DRAWING:
DATE:

DOKKEN ENGINEERING
110 BLUE RAVINE ROAD #200
FOLSOM, CA 95630
PHONE: (916) 858-0642
FAX: (916) 858-0643

CITY OF YUBA CITY

5TH STREET BRIDGE REPLACEMENT
CONSTRUCTION AREA SIGNS

SHEET NO.
OF
215

8/15/2016

...\5111\18581a001.dgn

REVISION #	DATE	DESCRIPTION AND SHEET NO.	APPROVED BY	DATE

REGISTERED PROFESSIONAL ENGINEER
NATHAN J. DONNELLY
No. 64459
Exp. 6/30/17
CIVIL
STATE OF CALIFORNIA

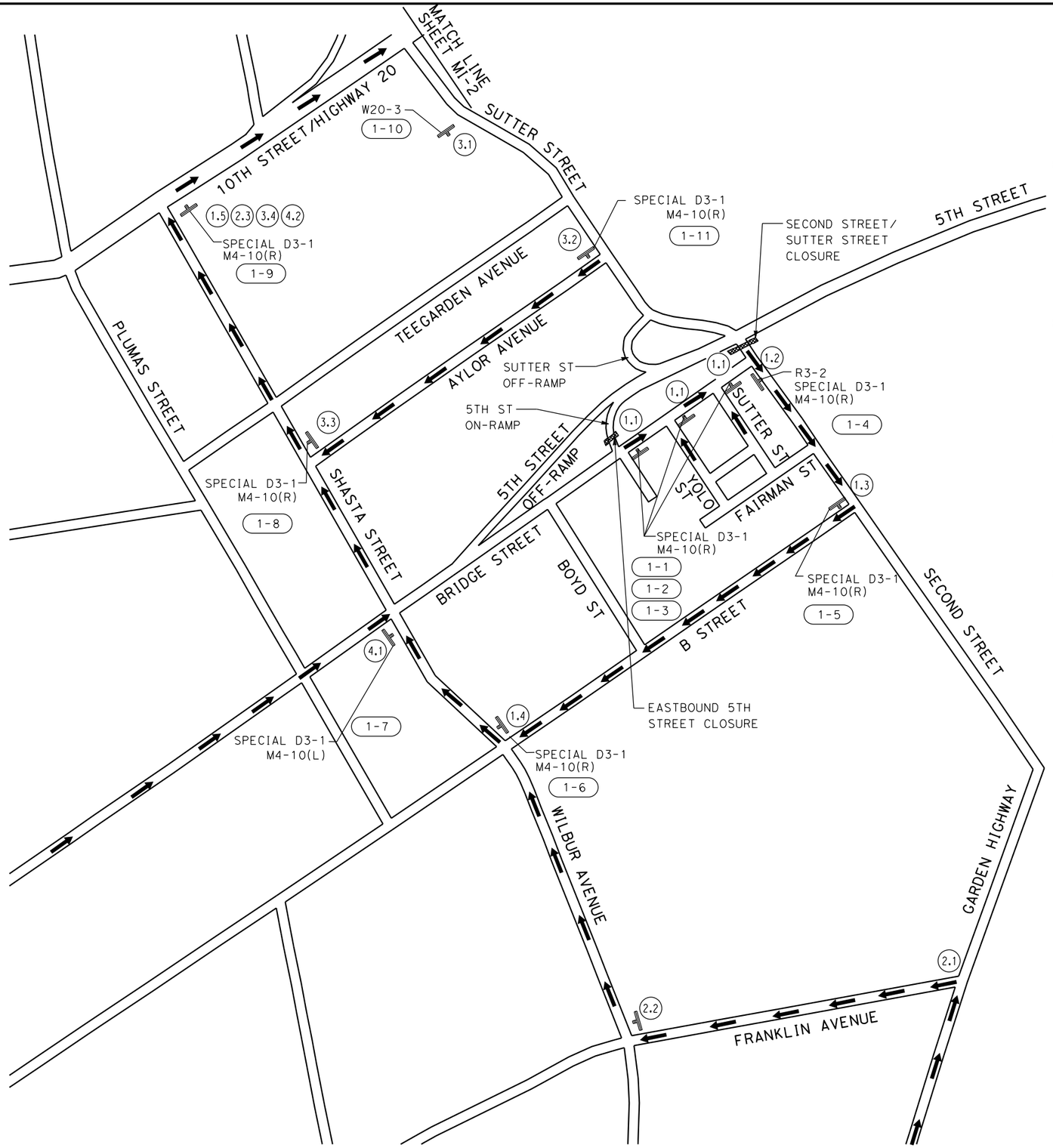

1 BRIDGE STREET DETOUR

1.1 ACCESS TO 5TH STREET CLOSED. TURN RIGHT ONTO BRIDGE STREET.
1.2 NO LEFT TURN. TURN RIGHT ONTO SECOND STREET.
1.3 TURN RIGHT ONTO B STREET.
1.4 TURN RIGHT ONTO WILBUR AVENUE/SHASTA STREET.
1.5 TURN RIGHT ONTO 10TH STREET/HIGHWAY 20.

2 NORTHBOUND DETOUR (FROM GARDEN HIGHWAY)

2.1 TURN LEFT ONTO FRANKLIN AVENUE.
2.2 TURN RIGHT ONTO WILBUR AVENUE/SHASTA STREET.
2.3 TURN RIGHT ONTO 10TH STREET/HIGHWAY 20.

3 SOUTHBOUND DETOUR

3.1 ROAD CLOSED AHEAD. ADVISE DETOUR FOR 5TH STREET OR BRIDGE STREET.
3.2 TURN RIGHT ONTO AYLOR AVENUE.
3.3 TURN RIGHT ONTO SHASTA STREET.
3.4 TURN RIGHT ONTO 10TH STREET/HIGHWAY 20.

4 EASTBOUND DETOUR

4.1 TURN LEFT ON SHASTA STREET
4.2 TURN RIGHT ONTO 10TH STREET/HIGHWAY 20.

SIGN NUMBER	SIGN CODE	SIGN
1-1, 1-2, 1-3, 1-5, 1-6, 1-8, 1-9, 1-11	SPECIAL D3-1 M4-10(R)	5TH STREET DETOUR
1-4	R3-2 SPECIAL D3-1 M4-10(R)	5TH STREET DETOUR
1-7	SPECIAL D3-1 M4-10(L)	5TH STREET DETOUR
1-10	W20-3	ROAD CLOSED AHEAD

STAGE 1

YUBA CITY:
DETOUR ROUTE NOTES FOR EASTBOUND 5TH STREET DETOUR

MI-1

FOR REDUCED PLANS
ORIGINAL SCALE IS IN INCHES
0 1 2 3
ALL DIMENSIONS SHOWN IN FEET
UNLESS OTHERWISE NOTED

8/15/2016
...\511\18581b001.dgn

PLAN SCALE: 1"=250'
PROFILE SCALE:
HORIZ:
VERT:

CONTRACT NO: 17-XX
DESIGNED: N. DONNELLY
DRAWN: A. LEE
CHECKED:
RECORD DRAWING:
DATE:

DOKKEN ENGINEERING
110 BLUE RAVINE ROAD #200
FOLSOM, CA 95630
PHONE: (916) 858-0642
FAX: (916) 858-0643

CITY OF YUBA CITY

5TH STREET BRIDGE REPLACEMENT
MOTORIST INFORMATION PLAN

SHEET NO.
OF
215

(5) 5TH STREET DETOUR FROM 10TH STREET/HIGHWAY 20

(5.1) CONTINUE ON 10TH STREET/HIGHWAY 20.

(5.2) TURN RIGHT ONTO H STREET. FOLLOW THROUGH TO 5TH STREET.

(5.3) END DETOUR

SIGN NUMBER	SIGN CODE	SIGN
(1-12)	SPECIAL D3-1 SC3	5TH STREET ↑ DETOUR
(1-13)	SPECIAL D3-1 M4-10(R)	5TH STREET DETOUR →
(1-14)	SPECIAL D3-1 M4-8A	5TH STREET END DETOUR

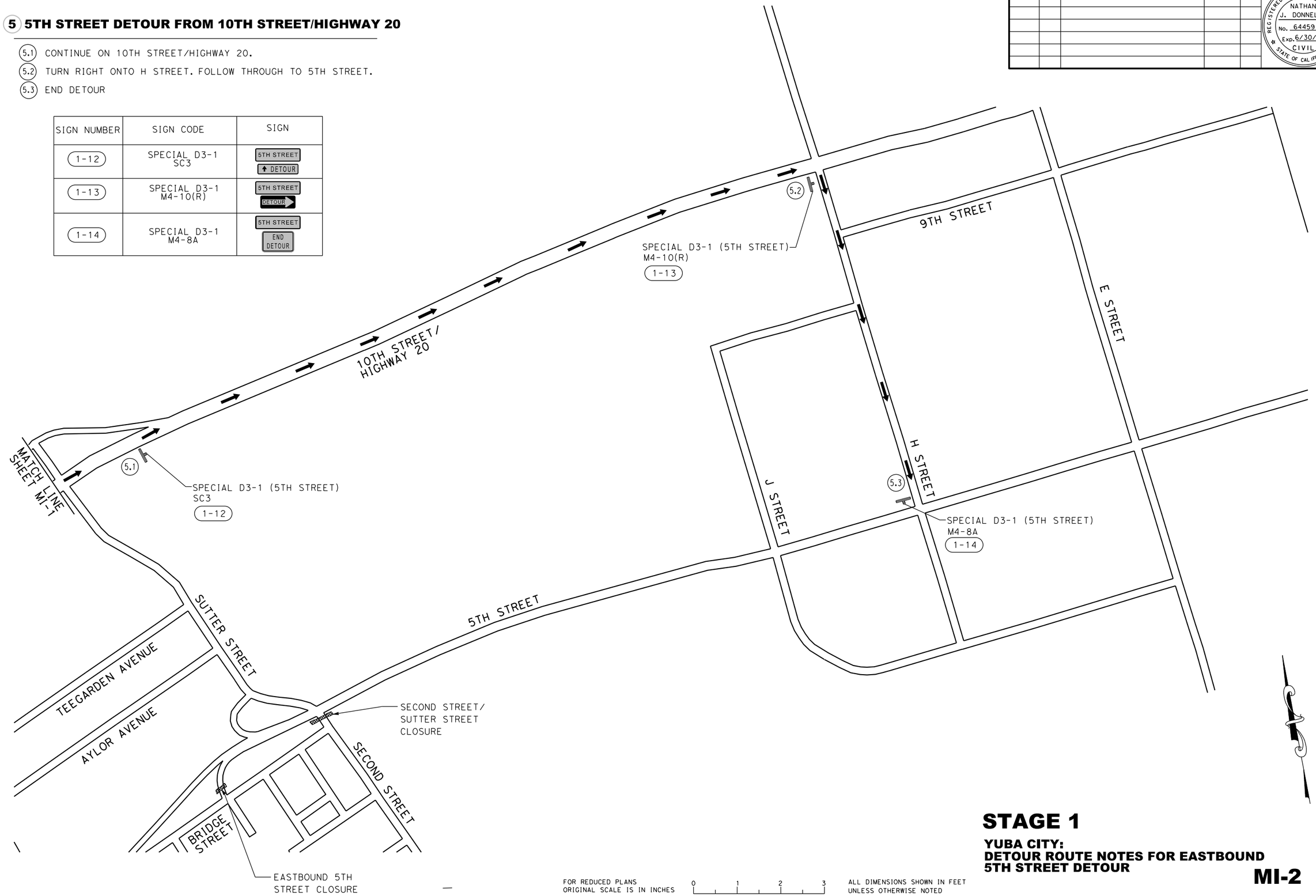

STAGE 1

YUBA CITY:
DETOUR ROUTE NOTES FOR EASTBOUND 5TH STREET DETOUR

MI-2

FOR REDUCED PLANS ORIGINAL SCALE IS IN INCHES 0 1 2 3

ALL DIMENSIONS SHOWN IN FEET UNLESS OTHERWISE NOTED

SECTION A-A
SECOND STREET

REVISION #	DATE:	DESCRIPTION AND SHEET NO.:	APPROVED BY:	DATE:

REGISTERED PROFESSIONAL ENGINEER
NATHAN J. DONNELLY
No. 64459
Exp. 6/30/17
CIVIL
STATE OF CALIFORNIA

PLAN SCALE: 1"=500'
PROFILE SCALE:
HORIZ:
VERT:

CONTRACT NO: 17-XX
DESIGNED: N. DONNELLY
DRAWN: A. LEE
CHECKED:
RECORD DRAWING:
DATE:

DOKKEN ENGINEERING
110 BLUE RAVINE ROAD #200
FOLSOM, CA 95630
PHONE: (916) 858-0642
FAX: (916) 858-0643

CITY OF YUBA CITY

5TH STREET BRIDGE REPLACEMENT
MOTORIST INFORMATION PLAN

SHEET NO.
OF
215

8/15/2016

...\511\18581b002.dgn

REVISION #	DATE:	DESCRIPTION AND SHEET NO.:	APPROVED BY:	DATE:

REGISTERED PROFESSIONAL ENGINEER
NATHAN J. DONNELLY
No. 64459
Exp. 6/30/17
CIVIL
STATE OF CALIFORNIA

1 WESTBOUND DETOUR TO BRIDGE STREET

(1.1) EXIT WESTBOUND 5TH STREET VIA EXIT LOOP.
(1.2) TURN LEFT ONTO SUTTER STREET.
(1.3) TURN LEFT ONTO AYLOR AVENUE.
(1.4) TURN LEFT ONTO SHASTA STREET AND FOLLOW TO BRIDGE STREET.

2 SOUTHBOUND DETOUR TO BRIDGE STREET

(2.1) ROAD CLOSED AHEAD. ADVISE DETOUR FOR 5TH STREET OR BRIDGE STREET.
(2.2) TURN RIGHT ON TEEGARDEN AVENUE.
(2.3) TURN LEFT ONTO SHASTA STREET AND FOLLOW TO BRIDGE STREET.

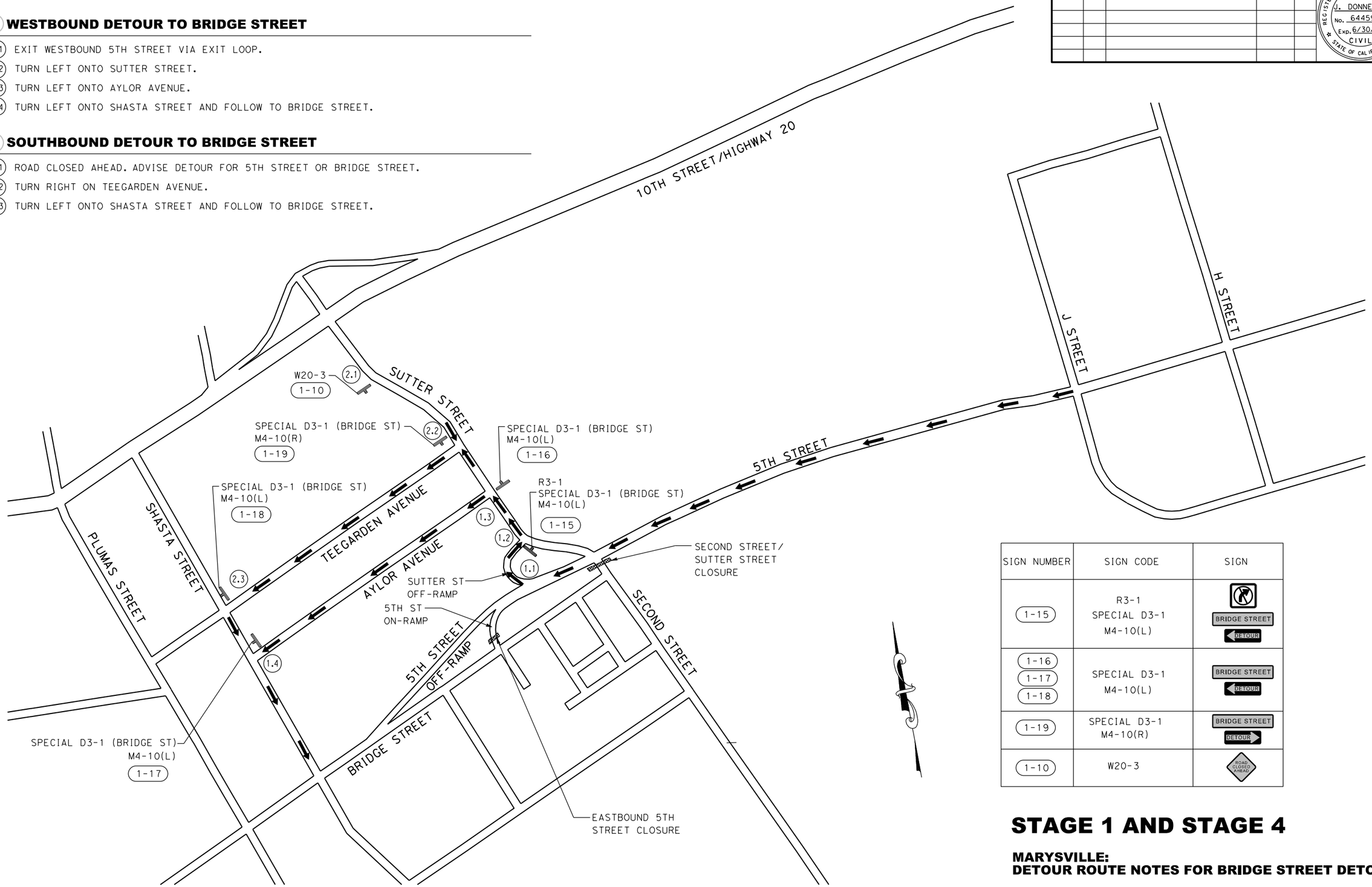

SIGN NUMBER	SIGN CODE	SIGN
1-15	R3-1 SPECIAL D3-1 M4-10(L)	BRIDGE STREET DETOUR
1-16 1-17 1-18	SPECIAL D3-1 M4-10(L)	BRIDGE STREET DETOUR
1-19	SPECIAL D3-1 M4-10(R)	BRIDGE STREET DETOUR
1-10	W20-3	ROAD CLOSED AHEAD

STAGE 1 AND STAGE 4

MARYSVILLE:
DETOUR ROUTE NOTES FOR BRIDGE STREET DETOUR

FOR REDUCED PLANS
ORIGINAL SCALE IS IN INCHES
0 1 2 3
ALL DIMENSIONS SHOWN IN FEET
UNLESS OTHERWISE NOTED

MI-3

PLAN SCALE: 1"=500'
PROFILE SCALE:
HORIZ:
VERT:

CONTRACT NO: 17-XX
DESIGNED: N. DONNELLY
DRAWN: E. ESPINOZA
CHECKED:
RECORD DRAWING: DATE:

DOKKEN ENGINEERING
110 BLUE RAVINE ROAD #200
FOLSOM, CA 95630
PHONE: (916) 858-0642
FAX: (916) 985-1845

CITY OF YUBA CITY

5TH STREET BRIDGE REPLACEMENT
MOTORIST INFORMATION PLAN

SHEET NO.
OF
215

8/15/2016
...\511\1858ib003.dgn

REVISION #	DATE:	DESCRIPTION AND SHEET NO.:	APPROVED BY:	DATE:

REGISTERED PROFESSIONAL ENGINEER
NATHAN J. DONNELLY
No. 64459
Exp. 6/30/17
CIVIL
STATE OF CALIFORNIA

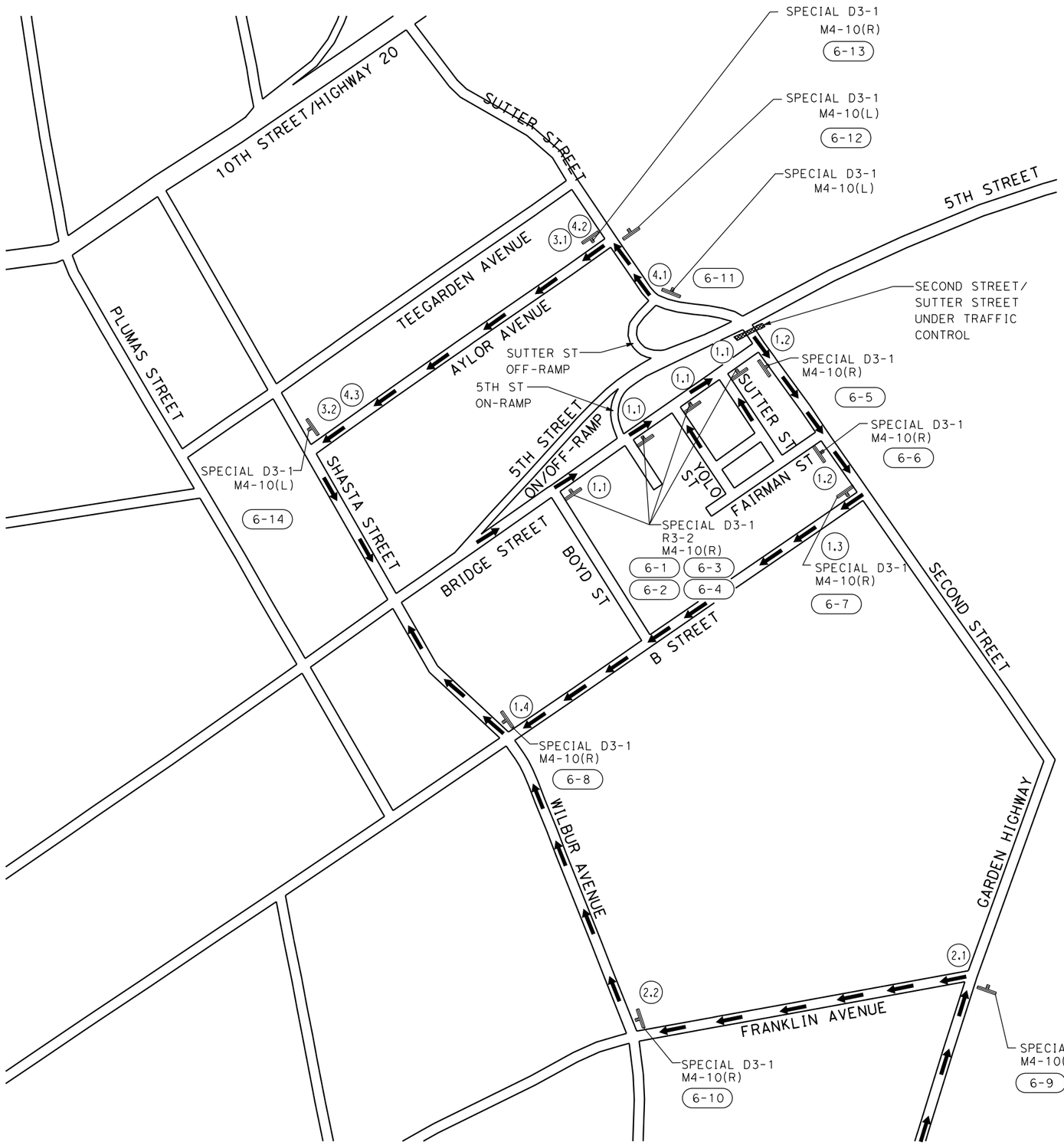

1 BRIDGE STREET DETOUR

(1.1) BRIDGE STREET CLOSED TO THROUGH TRAFFIC. LOCAL EASTBOUND TRAFFIC ONLY.

(1.2) TURN RIGHT ONTO SECOND STREET.

(1.3) TURN RIGHT ONTO B STREET.

(1.4) TURN RIGHT ONTO WILBUR AVENUE/SHASTA STREET.

2 NORTHBOUND DETOUR (FROM GARDEN HIGHWAY)

(2.1) WESTBOUND BRIDGE STREET CLOSED AT SECOND STREET. FOLLOW DETOUR FOR LOCAL ACCESS.

(2.2) TURN LEFT ONTO FRANKLIN AVENUE.

(2.3) TURN RIGHT ONTO WILBUR AVENUE/SHASTA STREET.

3 SOUTHBOUND DETOUR

(3.1) WESTBOUND BRIDGE STREET CLOSED. TURN RIGHT ONTO AYLOR AVENUE FOR DETOUR TO BRIDGE STREET.

(3.2) TURN LEFT ONTO SHASTA STREET.

4 WESTBOUND DETOUR

(4.1) WESTBOUND BRIDGE STREET CLOSED. TURN LEFT ONTO SUTTER STREET. FOLLOW DETOUR FOR LOCAL ACCESS.

(4.2) TURN LEFT ONTO AYLOR AVENUE.

(4.3) TURN LEFT ONTO SHASTA STREET.

SIGN NUMBER	SIGN CODE	SIGN
6-1 6-2 6-3 6-4	R3-2 SPECIAL D3-1 M4-10(R)	BRIDGE STREET DETOUR
6-5 6-6 6-7 6-8 6-10 6-13	SPECIAL D3-1 M4-10(R)	BRIDGE STREET DETOUR
6-9 6-11 6-12 6-14	SPECIAL D3-1 M4-10(L)	BRIDGE STREET DETOUR

STAGE 6

YUBA CITY:
DETOUR ROUTE NOTES FOR BRIDGE STREET RECONSTRUCTION

MI-4

FOR REDUCED PLANS
ORIGINAL SCALE IS IN INCHES

0 1 2 3

ALL DIMENSIONS SHOWN IN FEET
UNLESS OTHERWISE NOTED

8/15/2016

...\51\18581b004.dgn

PLAN SCALE: 1"=250'
PROFILE SCALE:
HORIZ:
VERT:

CONTRACT NO: 17-XX
DESIGNED: N. DONNELLY
DRAWN: E. ESPINOZA
CHECKED:
RECORD DRAWING:
DATE:

DOKKEN ENGINEERING
110 BLUE RAVINE ROAD #200
FOLSOM, CA 95630
PHONE: (916) 858-0642
FAX: (916) 985-1845

CITY OF YUBA CITY

5TH STREET BRIDGE REPLACEMENT
MOTORIST INFORMATION PLAN

SHEET NO.
OF
215

TEMPORARY CONSTRUCTION SIGNS TABLE				
SIGN NO.	SIGN CODE	SIGN MESSAGE	PANEL SIZE (INCHES)	NO. OF POSTS AND SIZE (INCHES)
1-1	SPECIAL D3-1	5TH STREET		1 - 6" X 6"
	M4-10(R)	DETOUR (→)	48"X 18"	
1-2	SPECIAL D3-1	5TH STREET		1 - 6" X 6"
	M4-10(R)	DETOUR (→)	48"X 18"	
1-3	SPECIAL D3-1	5TH STREET		1 - 6" X 6"
	M4-10(R)	DETOUR (→)	48"X 18"	
1-4	R3-2	NO LEFT TURN	24"X 24"	1 - 6" X 6"
	SPECIAL D3-1	5TH STREET		
	M4-10(R)	DETOUR (→)	48"X 18"	
1-5	SPECIAL D3-1	5TH STREET		1 - 6" X 6"
	M4-10(R)	DETOUR (→)	48"X 18"	
1-6	SPECIAL D3-1	5TH STREET		1 - 6" X 6"
	M4-10(R)	DETOUR (→)	48"X 18"	
1-7	SPECIAL D3-1	5TH STREET		1 - 6" X 6"
	M4-10(L)	DETOUR (←)	48"X 18"	
1-8	SPECIAL D3-1	5TH STREET		1 - 6" X 6"
	M4-10(R)	DETOUR (→)	48"X 18"	
1-9	SPECIAL D3-1	5TH STREET		1 - 6" X 6"
	M4-10(R)	DETOUR (→)	48"X 18"	
1-10	W20-3	ROAD CLOSED AHEAD	36"X 36"	1 - 6" X 6"
1-11	SPECIAL D3-1	5TH STREET		1 - 6" X 6"
	M4-10(R)	DETOUR (→)	48"X 18"	
1-12	SPECIAL D3-1	5TH STREET		1 - 6" X 6"
	SC3	(↑) DETOUR	48"X 18"	
1-13	SPECIAL D3-1	5TH STREET		1 - 6" X 6"
	M4-10(R)	DETOUR (→)	48"X 18"	
1-14	SPECIAL D3-1	5TH STREET		1 - 6" X 6"
	M4-8A	END DETOUR	24"X 12"	
1-15	R3-1	NO RIGHT TURN	24"X 24"	1 - 6" X 6"
	SPECIAL D3-1	BRIDGE STREET		
	M4-10(L)	DETOUR (←)	48"X 18"	
1-16	SPECIAL D3-1	BRIDGE STREET		1 - 6" X 6"
	M4-10(L)	DETOUR (←)	48"X 18"	
1-17	SPECIAL D3-1	BRIDGE STREET		1 - 6" X 6"
	M4-10(L)	DETOUR (←)	48"X 18"	
1-18	SPECIAL D3-1	BRIDGE STREET		1 - 6" X 6"
	M4-10(L)	DETOUR (←)	48"X 18"	
1-19	SPECIAL D3-1	BRIDGE STREET		1 - 6" X 6"
	M4-10(R)	DETOUR (→)	48"X 18"	

TEMPORARY CONSTRUCTION SIGNS TABLE				
SIGN NO.	SIGN CODE	SIGN MESSAGE	PANEL SIZE (INCHES)	NO. OF POSTS AND SIZE (INCHES)
6-1	R3-2	NO LEFT TURN	24"X 24"	1 - 6" X 6"
	SPECIAL D3-1	BRIDGE STREET		
	M4-10(R)	DETOUR (→)	48"X 18"	
6-2	R3-2	NO LEFT TURN	24"X 24"	1 - 6" X 6"
	SPECIAL D3-1	BRIDGE STREET		
	M4-10(R)	DETOUR (→)	48"X 18"	
6-3	R3-2	NO LEFT TURN	24"X 24"	1 - 6" X 6"
	SPECIAL D3-1	BRIDGE STREET		
	M4-10(R)	DETOUR (→)	48"X 18"	
6-4	R3-2	NO LEFT TURN	24"X 24"	1 - 6" X 6"
	SPECIAL D3-1	BRIDGE STREET		
	M4-10(R)	DETOUR (→)	48"X 18"	
6-5	SPECIAL D3-1	BRIDGE STREET		1 - 6" X 6"
	M4-10(R)	DETOUR (→)	48"X 18"	
6-6	SPECIAL D3-1	BRIDGE STREET		1 - 6" X 6"
	M4-10(R)	DETOUR (→)	48"X 18"	
6-7	SPECIAL D3-1	BRIDGE STREET		1 - 6" X 6"
	M4-10(R)	DETOUR (→)	48"X 18"	
6-8	SPECIAL D3-1	BRIDGE STREET		1 - 6" X 6"
	M4-10(R)	DETOUR (→)	48"X 18"	
6-9	SPECIAL D3-1	BRIDGE STREET		1 - 6" X 6"
	M4-10(L)	DETOUR (←)	48"X 18"	
6-10	SPECIAL D3-1	BRIDGE STREET		1 - 6" X 6"
	M4-10(R)	DETOUR (→)	48"X 18"	
6-11	SPECIAL D3-1	BRIDGE STREET		1 - 6" X 6"
	M4-10(L)	DETOUR (←)	48"X 18"	
6-12	SPECIAL D3-1	BRIDGE STREET		1 - 6" X 6"
	M4-10(L)	DETOUR (←)	48"X 18"	
6-13	SPECIAL D3-1	BRIDGE STREET		1 - 6" X 6"
	M4-10(R)	DETOUR (→)	48"X 18"	
6-14	SPECIAL D3-1	BRIDGE STREET		1 - 6" X 6"
	M4-10(L)	DETOUR (←)	48"X 18"	

REVISION #	DATE:	DESCRIPTION AND SHEET NO.:	APPROVED BY:	DATE:

REGISTERED PROFESSIONAL ENGINEER
NATHAN J. DONNELLY
No. 64459
Exp. 6/30/17
CIVIL
STATE OF CALIFORNIA

TOTAL TEMPORARY CONSTRUCTION SIGNS PER STAGE

SIGN CODE	STAGE 1/4	STAGE 6
M4-10(L)	5	4
M4-10(R)	11	10
SC3(CA)	1	
M4-8A	1	
SPECIAL D3-1 (5TH STREET)	13	
SPECIAL D3-1 (BRIDGE STREET)	5	14
R3-1	1	
R3-2	1	4
W20-3	1	
TOTALS	39	32

PLAN SCALE:
PROFILE SCALE:
HORIZ:
VERT:

CONTRACT NO: 17-XX
DESIGNED: N. DONNELLY
DRAWN: E. ESPINOZA
CHECKED:
RECORD DRAWING:
DATE:

DOKKEN ENGINEERING
110 BLUE RAVINE ROAD #200
FOLSOM, CA 95630
PHONE: (916) 858-0642
FAX: (916) 985-1845

CITY OF YUBA CITY

5TH STREET BRIDGE REPLACEMENT
MOTORIST INFORMATION QUANTITIES

SHEET NO.
OF
215

MOTORIST INFORMATION QUANTITIES

NO SCALE

MIQ-1

FOR REDUCED PLANS
ORIGINAL SCALE IS IN INCHES

0 1 2 3

ALL DIMENSIONS SHOWN IN FEET
UNLESS OTHERWISE NOTED

8/15/2016

...\511\18581d001.dgn

REVISION #	DATE	DESCRIPTION AND SHEET NO.	APPROVED BY	DATE

REGISTERED PROFESSIONAL ENGINEER
MATTHEW N. GRIGGS
No. 54168
Exp. 12/31/16
CIVIL
STATE OF CALIFORNIA

PLAN SCALE:
PROFILE SCALE:
HORIZ:
VERT:

CONTRACT NO: 17-XX
DESIGNED:
DRAWN:
CHECKED:
RECORD DRAWING:
DATE:

DOKKEN ENGINEERING
110 BLUE RAVINE ROAD #200
FOLSOM, CA 95630
PHONE: (916) 858-0642
FAX: (916) 858-0643

CITY OF YUBA CITY

5TH STREET BRIDGE REPLACEMENT
STAGE 1 CONSTRUCTION

SHEET NO.
OF
215

LEGEND

CONSTRUCT THIS STAGE

CONSTRUCTION UNDER TRAFFIC CONTROL OR ROAD CLOSURE

TRAFFIC FLOW

ALLOWABLE TRAFFIC CLOSURES

WORK ITEM	DURATION	CLOSURE LOCATION
REMOVE STRUCTURE A	TWO NIGHTS	EASTBOUND 5th STREET ON-RAMP
REMOVE STRUCTURE B	TWO NIGHTS	SECOND STREET

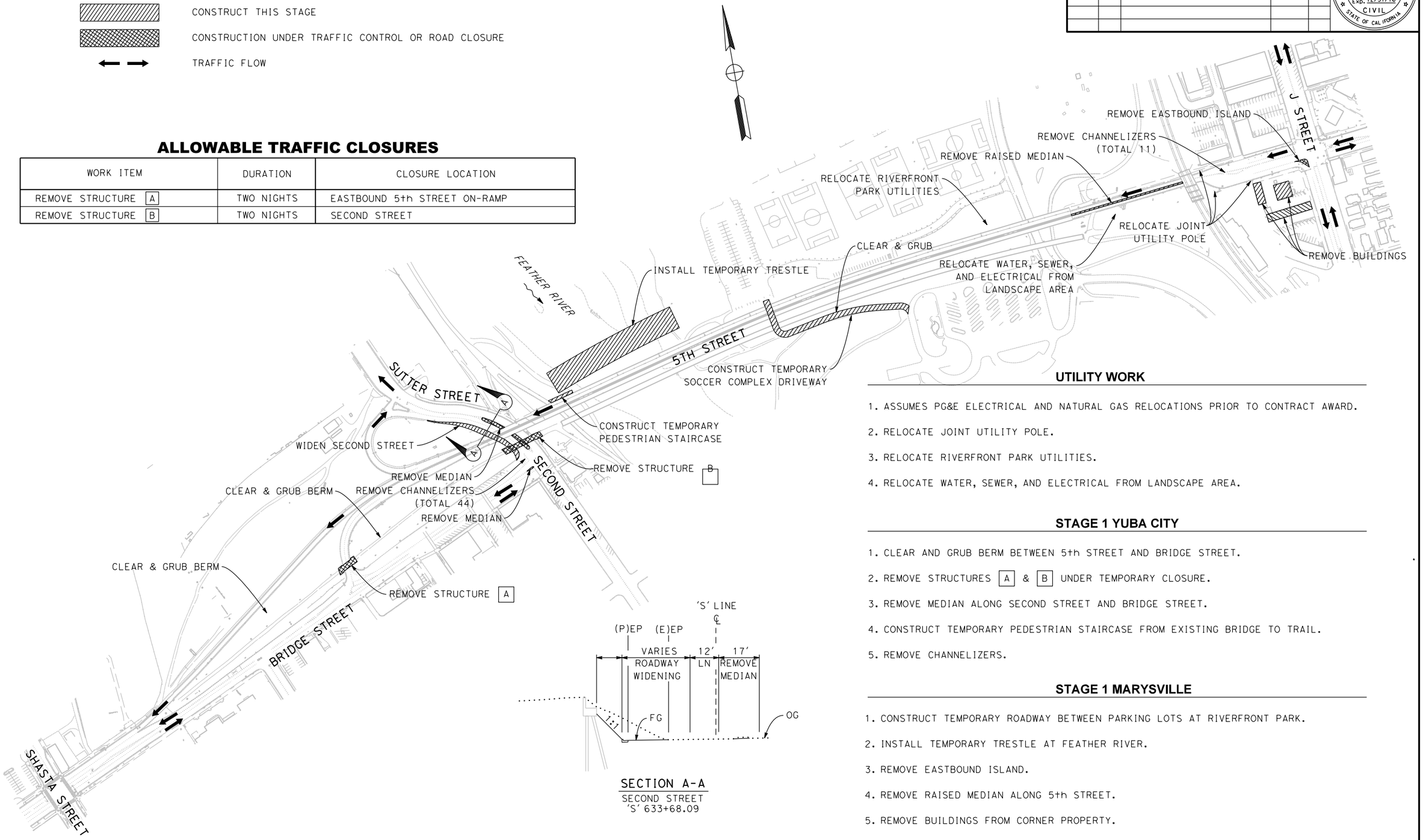

SECTION A-A
SECOND STREET
'S' 633+68.09

UTILITY WORK

1. ASSUMES PG&E ELECTRICAL AND NATURAL GAS RELOCATIONS PRIOR TO CONTRACT AWARD.
2. RELOCATE JOINT UTILITY POLE.
3. RELOCATE RIVERFRONT PARK UTILITIES.
4. RELOCATE WATER, SEWER, AND ELECTRICAL FROM LANDSCAPE AREA.

STAGE 1 YUBA CITY

1. CLEAR AND GRUB BERM BETWEEN 5th STREET AND BRIDGE STREET.
2. REMOVE STRUCTURES A & B UNDER TEMPORARY CLOSURE.
3. REMOVE MEDIAN ALONG SECOND STREET AND BRIDGE STREET.
4. CONSTRUCT TEMPORARY PEDESTRIAN STAIRCASE FROM EXISTING BRIDGE TO TRAIL.
5. REMOVE CHANNELIZERS.

STAGE 1 MARYSVILLE

1. CONSTRUCT TEMPORARY ROADWAY BETWEEN PARKING LOTS AT RIVERFRONT PARK.
2. INSTALL TEMPORARY TRESTLE AT FEATHER RIVER.
3. REMOVE EASTBOUND ISLAND.
4. REMOVE RAISED MEDIAN ALONG 5th STREET.
5. REMOVE BUILDINGS FROM CORNER PROPERTY.
6. REMOVE CHANNELIZERS.

SC-1

FOR REDUCED PLANS ORIGINAL SCALE IS IN INCHES 0 1 2 3

ALL DIMENSIONS SHOWN IN FEET UNLESS OTHERWISE NOTED

8/15/2016

...\511\1858ma001.dgn

REVISION #	DATE:	DESCRIPTION AND SHEET NO.:	APPROVED BY:	DATE:

REGISTERED PROFESSIONAL ENGINEER
NATHAN J. DONNELLY
No. 64459
Exp. 6/30/17
CIVIL
STATE OF CALIFORNIA

STAGE 2 YUBA CITY

1. REMOVE BARRIER.
2. COMPLETE BASIN GRADING.
3. CONSTRUCT RETAINING WALLS.
4. CONSTRUCT WESTBOUND TEMPORARY OFF-RAMP TO SUTTER STREET.
5. RECONSTRUCT SIDEWALK, CURB AND GUTTER AT SUTTER STREET AND SECOND STREET. RELOCATE AT&T UNDDERGROUND VAULT.
6. CONSTRUCT NORTH HALF OF ABUTMENT 1 AND ABUTMENT 2 FOR SECOND STREET UNDERCROSSING.
7. CONSTRUCT ABUTMENT 1 FOR 5th STREET BRIDGE.
8. INSTALL TEMPORARY TRAFFIC SIGNALS AT BRIDGE STREET/EASTBOUND 5th STREET ON-RAMP AND AT BRIDGE STREET/SECOND STREET.

UTILITY WORK

1. ASSUMES PG&E ELECTRICAL AND NATURAL GAS RELOCATION PRIOR TO CONTRACT AWARD.
2. RELOCATE WATER LINE AT SUTTER/SECOND STREET.
3. INSTALL UNDERGROUND UTILITY VAULTS.
4. INSTALL COMMUNICATION'S CONDUIT.
5. INSTALL WATER LINE (J STREET).

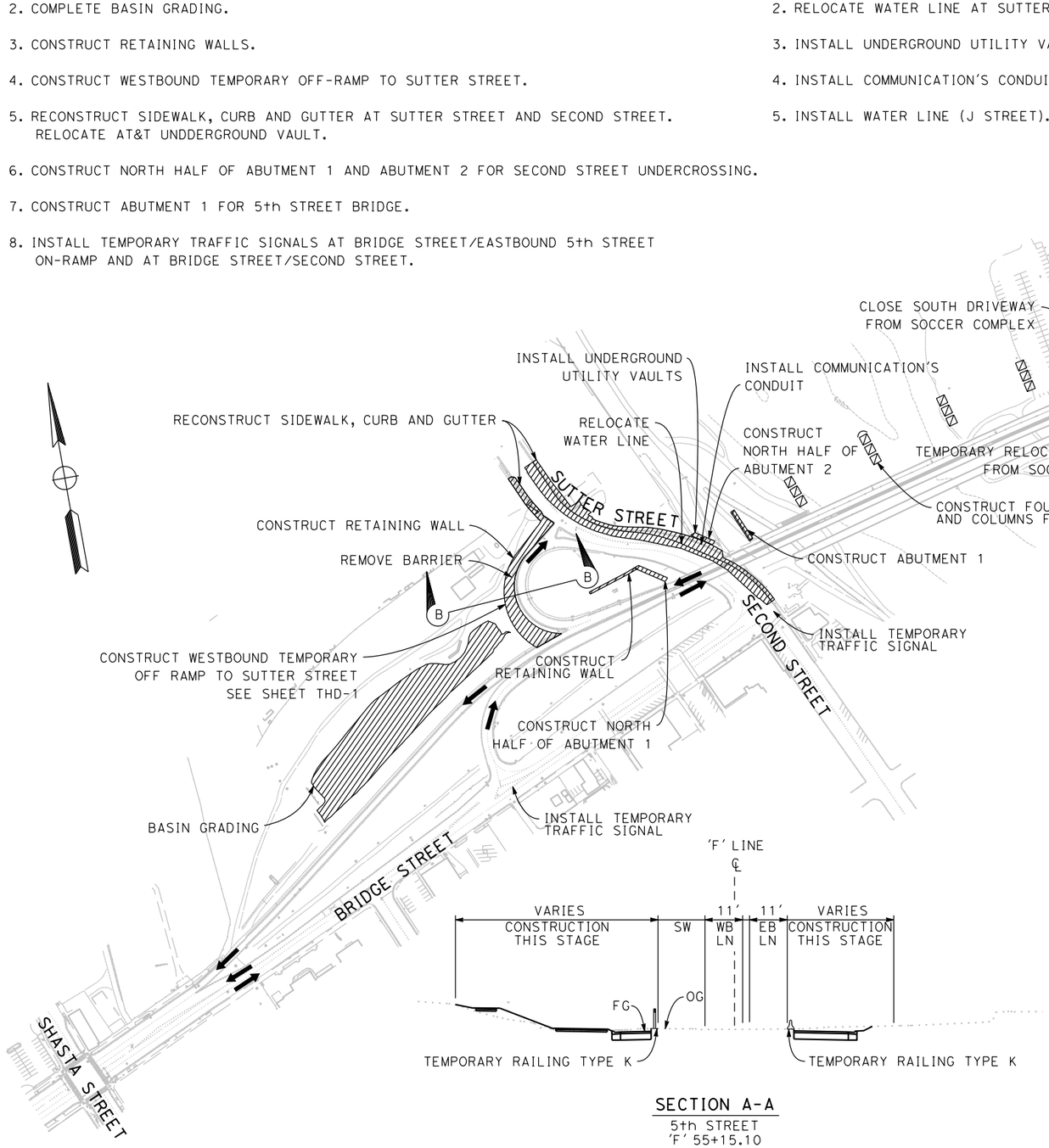

SECTION A-A
5th STREET
'F' 55+15.10

STAGE 2 MARYSVILLE

1. TEMPORARY RELOCATE DRIVEWAY FROM SOCCER COMPLEX.
2. CONSTRUCT FOUNDATIONS AND COLUMNS FOR FRAMES 1 & 2 AND NORTH HALF OF FRAME 3 OF 5th STREET BRIDGE.
3. CONSTRUCT NORTH PORTION OF ABUTMENT 2 FROM PROPOSED 5th STREET BRIDGE.
3. CONSTRUCT TRAIL TO CONNECT WITH CITY STREET NETWORK IN MARYSVILLE.
4. CONSTRUCT SOUNDWALL AND RETAINNG WALL.
5. WIDEN SOUTH SIDE OF 5th STREET.
6. RECONSTRUCT SIDEWALK, CURB AND GUTTER ALONG J STREET.

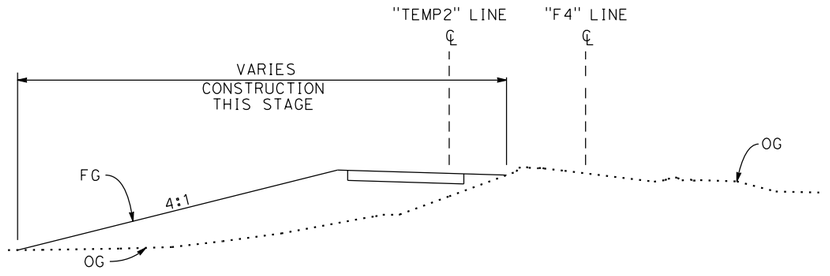

SECTION B-B
OFF RAMP
"TEMP2" 801+50

FOR REDUCED PLANS ORIGINAL SCALE IS IN INCHES
0 1 2 3
ALL DIMENSIONS SHOWN IN FEET UNLESS OTHERWISE NOTED

SC-2

PLAN SCALE:
PROFILE SCALE:
HORIZ:
VERT:

CONTRACT NO: 17-XX
DESIGNED: N. DONNELLY
DRAWN: E. ESPINOZA
CHECKED:
RECORD DRAWING:
DATE:

DOKKEN ENGINEERING
110 BLUE RAVINE ROAD 7200
FOLSOM, CA 95630
PHONE: (916) 858-0642
FAX: (916) 985-1845

CITY OF YUBA CITY

5TH STREET BRIDGE REPLACEMENT
STAGE 2 CONSTRUCTION

SHEET NO.
OF 215

8/15/2016
...\511\858ma002.dgn

REVISION #	DATE:	DESCRIPTION AND SHEET NO.:	APPROVED BY:	DATE:

REGISTERED PROFESSIONAL ENGINEER
NATHAN J. DONNELLY
No. 64459
Exp. 6/30/17
CIVIL
STATE OF CALIFORNIA

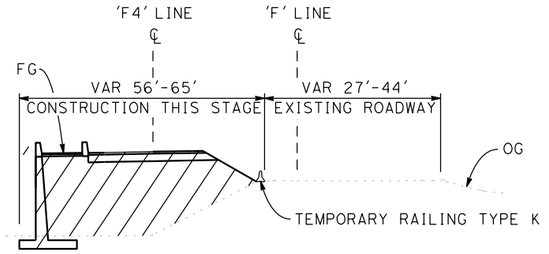

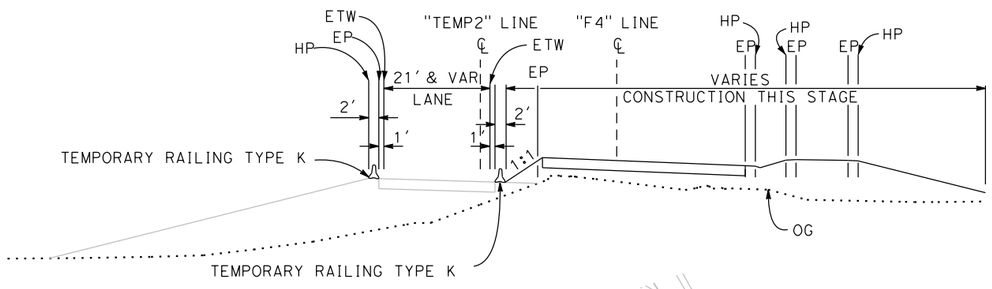

SECTION A-A
5th STREET
'F' 32+00.00

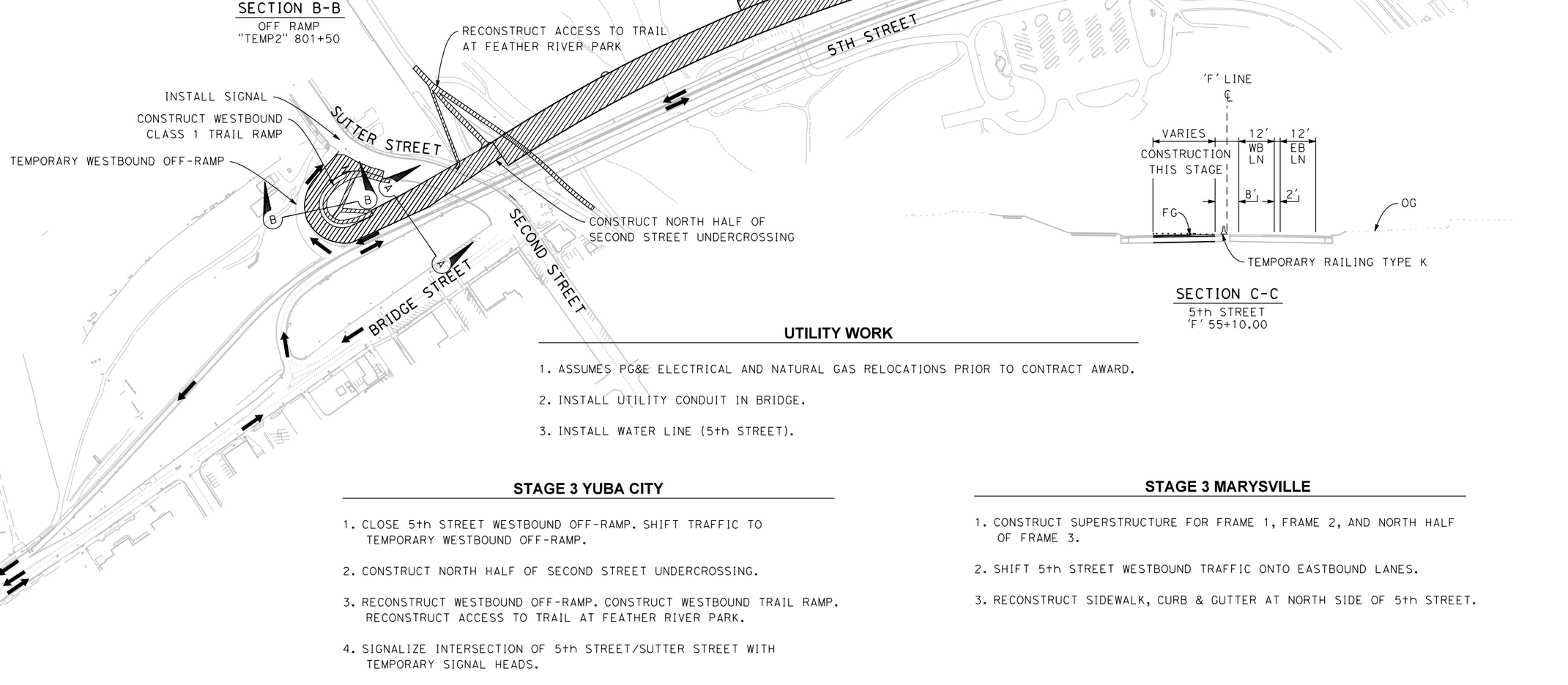

SECTION B-B
OFF RAMP
"TEMP2" 801+50

SECTION C-C
5th STREET
'F' 55+10.00

UTILITY WORK

1. ASSUMES PG&E ELECTRICAL AND NATURAL GAS RELOCATIONS PRIOR TO CONTRACT AWARD.
2. INSTALL UTILITY CONDUIT IN BRIDGE.
3. INSTALL WATER LINE (5th STREET).

STAGE 3 YUBA CITY

1. CLOSE 5th STREET WESTBOUND OFF-RAMP. SHIFT TRAFFIC TO TEMPORARY WESTBOUND OFF-RAMP.
2. CONSTRUCT NORTH HALF OF SECOND STREET UNDERCROSSING.
3. RECONSTRUCT WESTBOUND OFF-RAMP. CONSTRUCT WESTBOUND TRAIL RAMP. RECONSTRUCT ACCESS TO TRAIL AT FEATHER RIVER PARK.
4. SIGNALIZE INTERSECTION OF 5th STREET/SUTTER STREET WITH TEMPORARY SIGNAL HEADS.

STAGE 3 MARYSVILLE

1. CONSTRUCT SUPERSTRUCTURE FOR FRAME 1, FRAME 2, AND NORTH HALF OF FRAME 3.
2. SHIFT 5th STREET WESTBOUND TRAFFIC ONTO EASTBOUND LANES.
3. RECONSTRUCT SIDEWALK, CURB & GUTTER AT NORTH SIDE OF 5th STREET.

FOR REDUCED PLANS ORIGINAL SCALE IS IN INCHES 0 1 2 3 ALL DIMENSIONS SHOWN IN FEET UNLESS OTHERWISE NOTED

PLAN SCALE:
PROFILE SCALE:
HORIZ:
VERT:

CONTRACT NO: 17-XX
DESIGNED: N. DONNELLY
DRAWN: E. ESPINOZA
CHECKED:
RECORD DRAWING:
DATE:

DOKKEN ENGINEERING
110 BLUE RAVINE ROAD #200
FOLSOM, CA 95630
PHONE: (916) 858-0642
FAX: (916) 985-1845

CITY OF YUBA CITY

5TH STREET BRIDGE REPLACEMENT
STAGE 3 CONSTRUCTION

SHEET NO.
OF 215

SC-3

8/15/2016
...\511\1858ma003.dgn

REVISION #	DATE	DESCRIPTION AND SHEET NO.	APPROVED BY	DATE

REGISTERED PROFESSIONAL ENGINEER
NATHAN J. DONNELLY
No. 64459
Exp. 6/30/17
CIVIL
STATE OF CALIFORNIA

UTILITY WORK

1. UTILITY OWNERS TO PERFORM LINE SPLICING.
2. INSTALL WATER LINE (5th STREET).

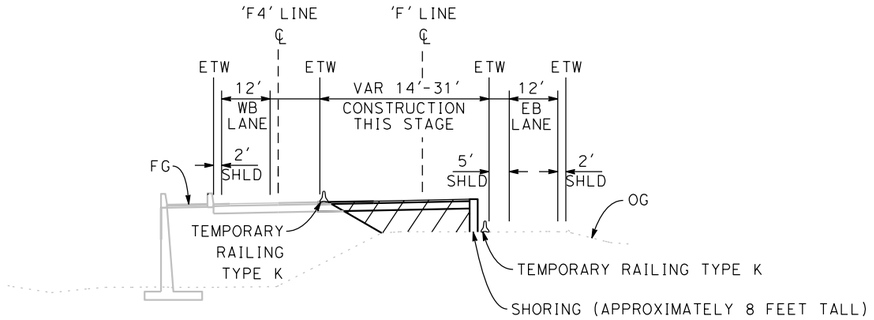

SECTION A-A
5th STREET
'F' 32+00.00

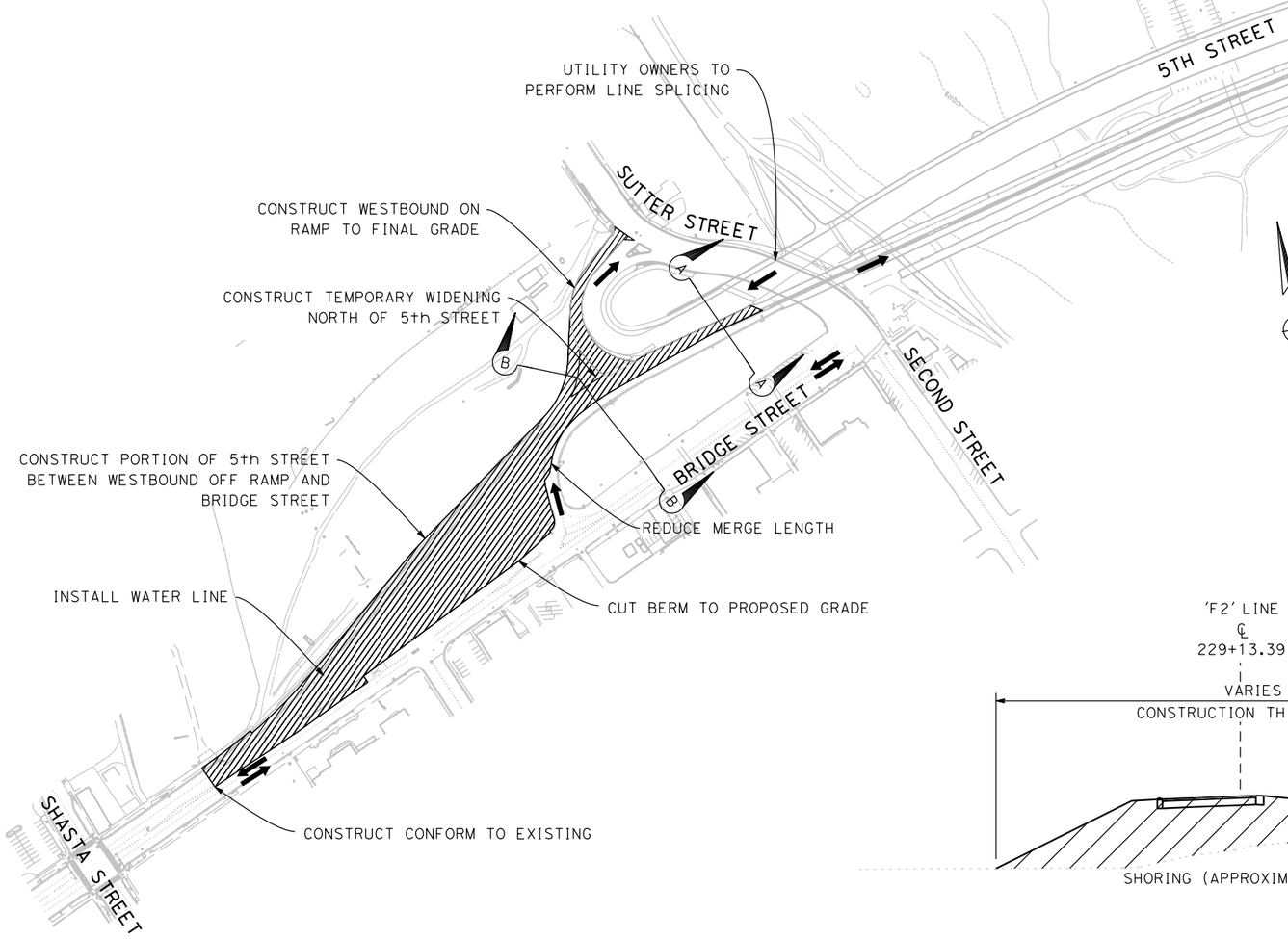

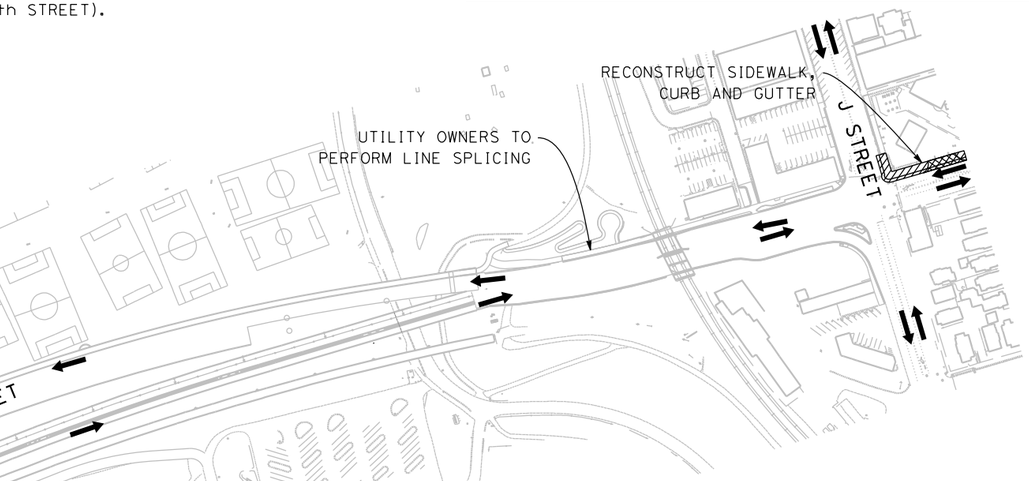

STAGE 4 YUBA CITY

1. SHIFT WESTBOUND TRAFFIC ONTO NEW BRIDGE.
2. DETOUR WESTBOUND TRAFFIC ONTO SUTTER STREET.
3. CONSTRUCT WESTBOUND ON-RAMP TO FINAL GRADE.
4. CONSTRUCT PORTION OF 5th STREET BETWEEN WESTBOUND OFF-RAMP AND BRIDGE STREET.
5. CONSTRUCT TEMPORARY WIDENING NORTH OF 5th STREET.

STAGE 4 MARYSVILLE

1. RECONSTRUCT SIDEWALK, CURB AND GUTTER ALONG 5th STREET.

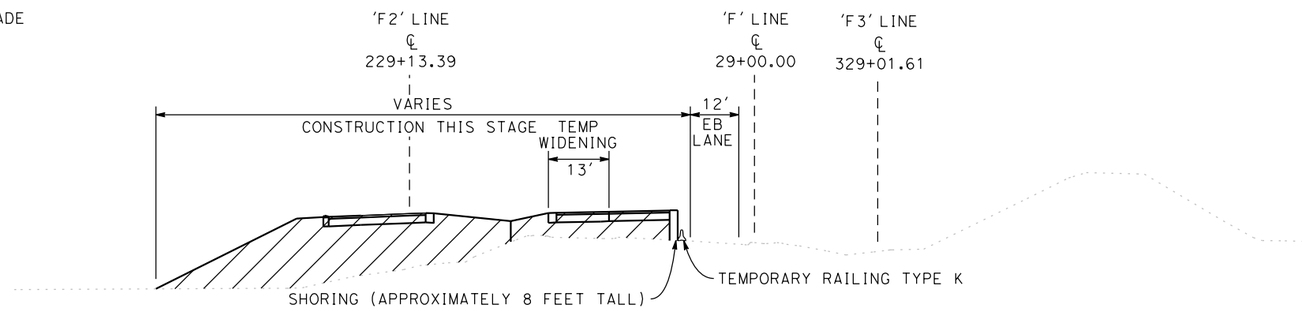

SECTION B-B
5th STREET
'F' 29+00.00

FOR REDUCED PLANS
ORIGINAL SCALE IS IN INCHES
0 1 2 3
ALL DIMENSIONS SHOWN IN FEET
UNLESS OTHERWISE NOTED

SC-4

PLAN SCALE:
PROFILE SCALE:
HORIZ:
VERT:

CONTRACT NO: 17-XX
DESIGNED: N. DONNELLY
DRAWN: E. ESPINOZA
CHECKED:
RECORD DRAWING:
DATE:

DOKKEN ENGINEERING
110 BLUE RAVINE ROAD #200
FOLSOM, CA 95630
PHONE: (916) 858-0642
FAX: (916) 858-0643

CITY OF YUBA CITY

5TH STREET BRIDGE REPLACEMENT
STAGE 4 CONSTRUCTION

SHEET NO.
OF
215

8/15/2016

...\511\1858ma004.dgn

REVISION #	DATE:	DESCRIPTION AND SHEET NO.:	APPROVED BY:	DATE:

REGISTERED PROFESSIONAL ENGINEER
NATHAN J. DONNELLY
No. 64459
Exp. 6/30/17
CIVIL
STATE OF CALIFORNIA

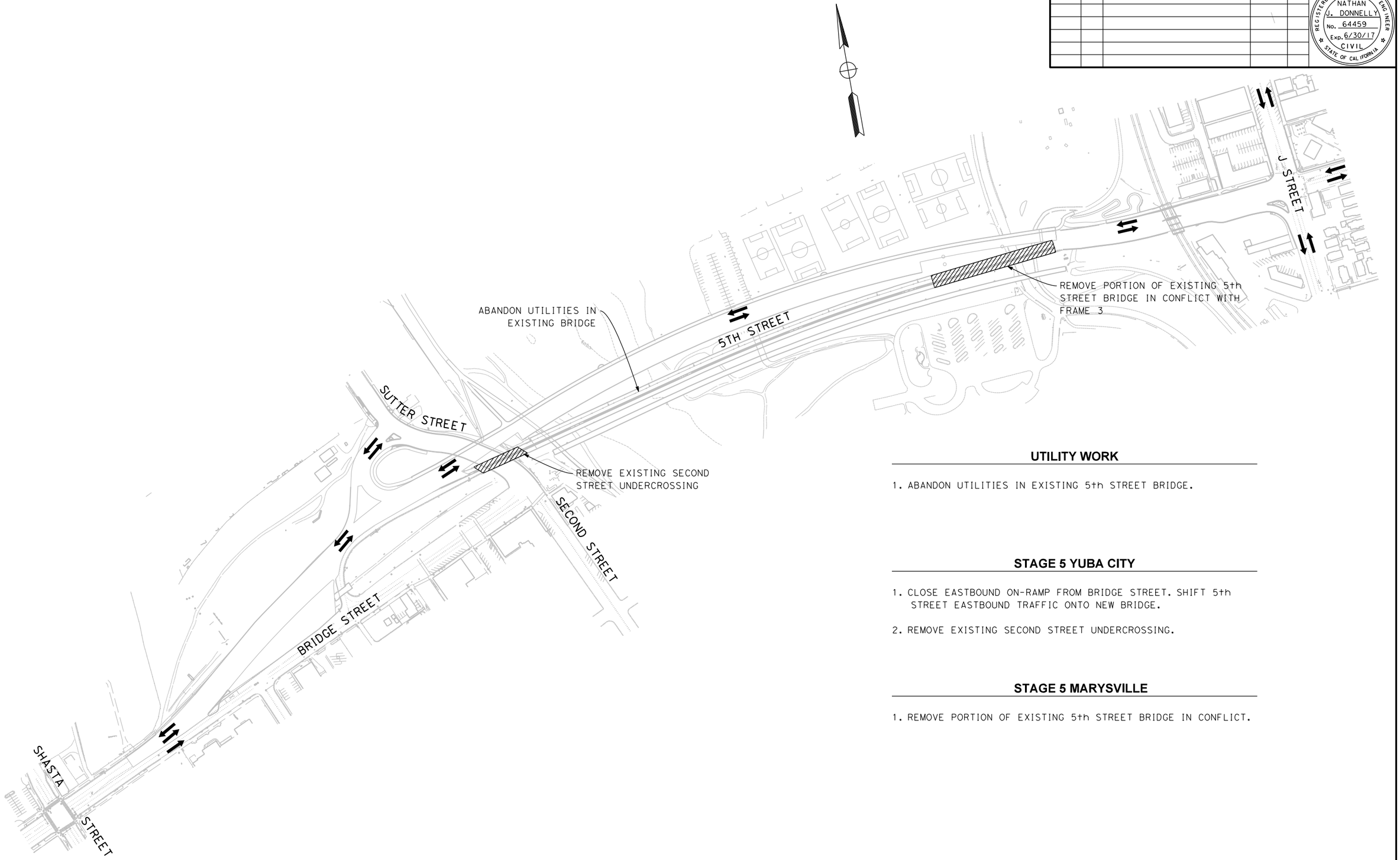

UTILITY WORK

1. ABANDON UTILITIES IN EXISTING 5th STREET BRIDGE.

STAGE 5 YUBA CITY

1. CLOSE EASTBOUND ON-RAMP FROM BRIDGE STREET. SHIFT 5th STREET EASTBOUND TRAFFIC ONTO NEW BRIDGE.
2. REMOVE EXISTING SECOND STREET UNDERCROSSING.

STAGE 5 MARYSVILLE

1. REMOVE PORTION OF EXISTING 5th STREET BRIDGE IN CONFLICT.

FOR REDUCED PLANS
ORIGINAL SCALE IS IN INCHES

0 1 2 3

ALL DIMENSIONS SHOWN IN FEET
UNLESS OTHERWISE NOTED

SC-5

PLAN SCALE:
PROFILE SCALE:
HORIZ:
VERT:

CONTRACT NO: 17-XX
DESIGNED: N. DONNELLY
DRAWN: E. ESPINOZA
CHECKED:
RECORD DRAWING: DATE:

DOKKEN ENGINEERING
110 BLUE RAVINE ROAD #200
FOLSOM, CA 95630
PHONE: (916) 858-0642
FAX: (916) 985-1845

CITY OF YUBA CITY

5TH STREET BRIDGE REPLACEMENT
STAGE 5 CONSTRUCTION

SHEET NO.
OF
215

8/15/2016

...\511\1858ma005.dgn

REVISION #	DATE	DESCRIPTION AND SHEET NO.	APPROVED BY	DATE

REGISTERED PROFESSIONAL ENGINEER
NATHAN J. DONNELLY
No. 64459
Exp. 6/30/17
CIVIL
STATE OF CALIFORNIA

SECTION A-A
5th STREET
'F' 32+00.00

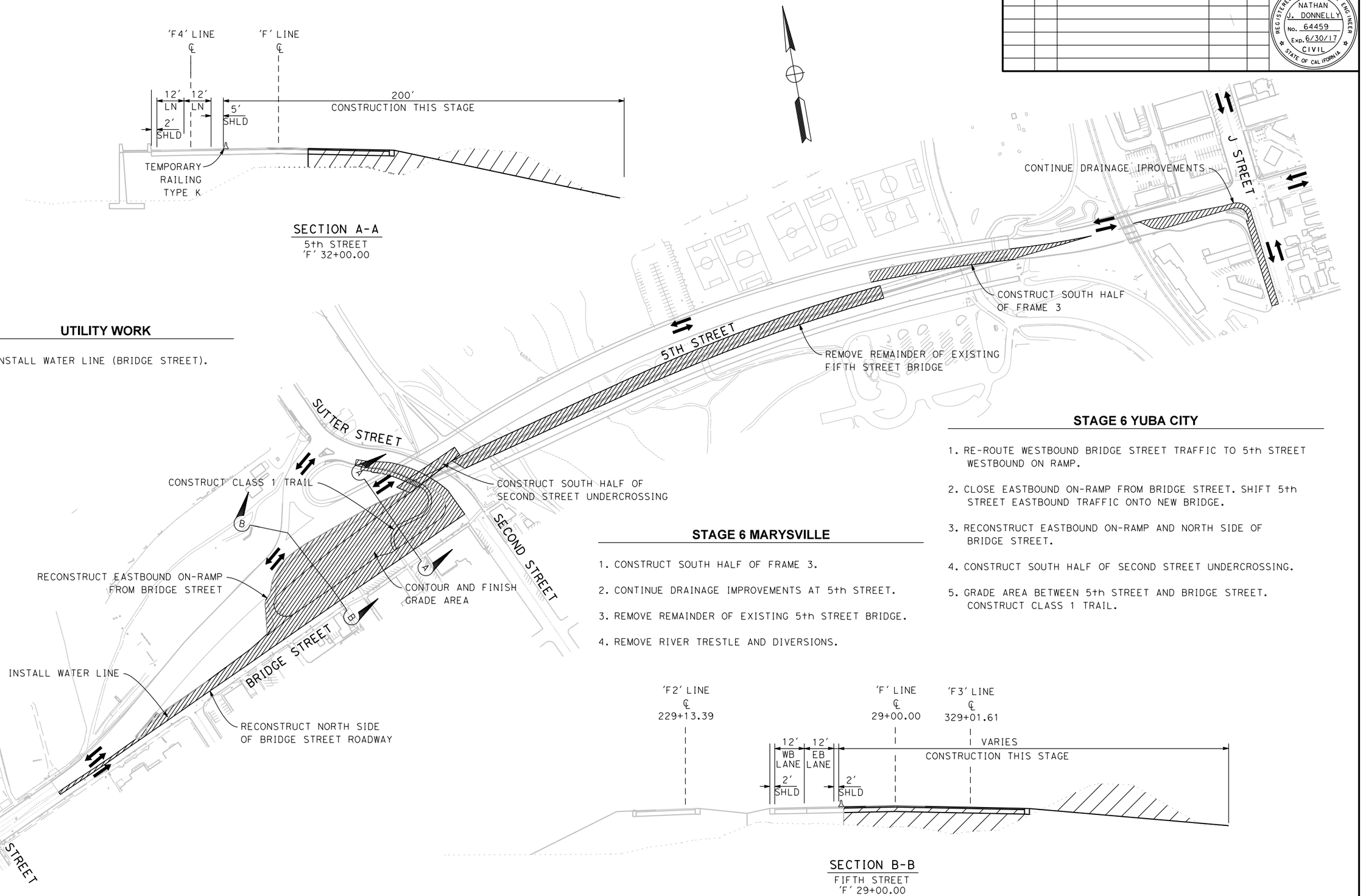

UTILITY WORK

1. INSTALL WATER LINE (BRIDGE STREET).

STAGE 6 MARYSVILLE

1. CONSTRUCT SOUTH HALF OF FRAME 3.
2. CONTINUE DRAINAGE IMPROVEMENTS AT 5th STREET.
3. REMOVE REMAINDER OF EXISTING 5th STREET BRIDGE.
4. REMOVE RIVER TRESTLE AND DIVERSIONS.

STAGE 6 YUBA CITY

1. RE-ROUTE WESTBOUND BRIDGE STREET TRAFFIC TO 5th STREET WESTBOUND ON RAMP.
2. CLOSE EASTBOUND ON-RAMP FROM BRIDGE STREET. SHIFT 5th STREET EASTBOUND TRAFFIC ONTO NEW BRIDGE.
3. RECONSTRUCT EASTBOUND ON-RAMP AND NORTH SIDE OF BRIDGE STREET.
4. CONSTRUCT SOUTH HALF OF SECOND STREET UNDERCROSSING.
5. GRADE AREA BETWEEN 5th STREET AND BRIDGE STREET. CONSTRUCT CLASS 1 TRAIL.

SECTION B-B
FIFTH STREET
'F' 29+00.00

FOR REDUCED PLANS
ORIGINAL SCALE IS IN INCHES
0 1 2 3
ALL DIMENSIONS SHOWN IN FEET
UNLESS OTHERWISE NOTED

SC-6

PLAN SCALE:
PROFILE SCALE:
HORIZ:
VERT:

CONTRACT NO: **17-XX**
DESIGNED: N. DONNELLY
DRAWN: E. ESPINOZA
CHECKED:
RECORD DRAWING:
DATE:

DOKKEN ENGINEERING
110 BLUE RAVINE ROAD #200
FOLSOM, CA 95630
PHONE: (916) 858-0642
FAX: (916) 858-0643

CITY OF **YUBA CITY**

5TH STREET BRIDGE REPLACEMENT
STAGE 6 CONSTRUCTION

SHEET NO.
OF
215

8/15/2016
...\511\1858ma006.dgn

REVISION #	DATE	DESCRIPTION AND SHEET NO.	APPROVED BY	DATE

REGISTERED PROFESSIONAL ENGINEER
NATHAN J. DONNELLY
No. 64459
Exp. 6/30/17
CIVIL
STATE OF CALIFORNIA

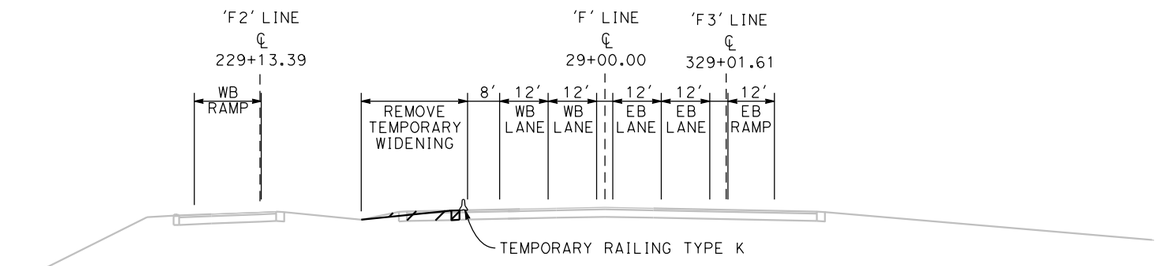

SECTION A-A
5th STREET
'F' 29+00.00

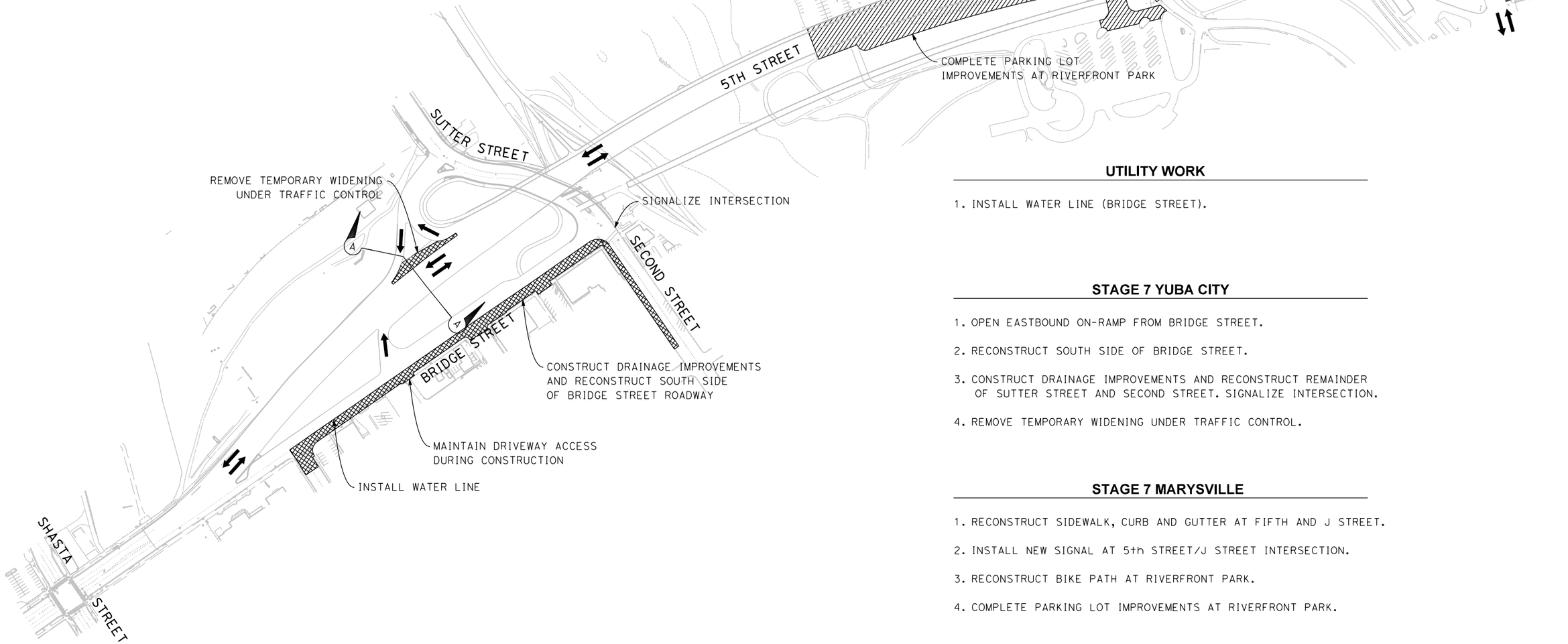

UTILITY WORK

1. INSTALL WATER LINE (BRIDGE STREET).

STAGE 7 YUBA CITY

1. OPEN EASTBOUND ON-RAMP FROM BRIDGE STREET.
2. RECONSTRUCT SOUTH SIDE OF BRIDGE STREET.
3. CONSTRUCT DRAINAGE IMPROVEMENTS AND RECONSTRUCT REMAINDER OF SUTTER STREET AND SECOND STREET. SIGNALIZE INTERSECTION.
4. REMOVE TEMPORARY WIDENING UNDER TRAFFIC CONTROL.

STAGE 7 MARYSVILLE

1. RECONSTRUCT SIDEWALK, CURB AND GUTTER AT FIFTH AND J STREET.
2. INSTALL NEW SIGNAL AT 5th STREET/J STREET INTERSECTION.
3. RECONSTRUCT BIKE PATH AT RIVERFRONT PARK.
4. COMPLETE PARKING LOT IMPROVEMENTS AT RIVERFRONT PARK.

FOR REDUCED PLANS ORIGINAL SCALE IS IN INCHES 0 1 2 3 ALL DIMENSIONS SHOWN IN FEET UNLESS OTHERWISE NOTED

SC-7

PLAN SCALE:
PROFILE SCALE:
HORIZ:
VERT:

CONTRACT NO: 17-XX
DESIGNED: N. DONNELLY
DRAWN: E. ESPINOZA
CHECKED:
RECORD DRAWING:
DATE:

DOKKEN ENGINEERING
110 BLUE RAVINE ROAD #200
FOLSOM, CA 95630
PHONE: (916) 858-0642
FAX: (916) 858-0643

CITY OF YUBA CITY

5TH STREET BRIDGE REPLACEMENT
STAGE 7 CONSTRUCTION

SHEET NO.
OF
215

8/15/2016
...\511\1858ma007.dgn

REVISION #	DATE:	DESCRIPTION AND SHEET NO.:	APPROVED BY:	DATE:

REGISTERED PROFESSIONAL ENGINEER
NATHAN J. DONNELLY
No. 64459
Exp. 6/30/17
CIVIL
STATE OF CALIFORNIA

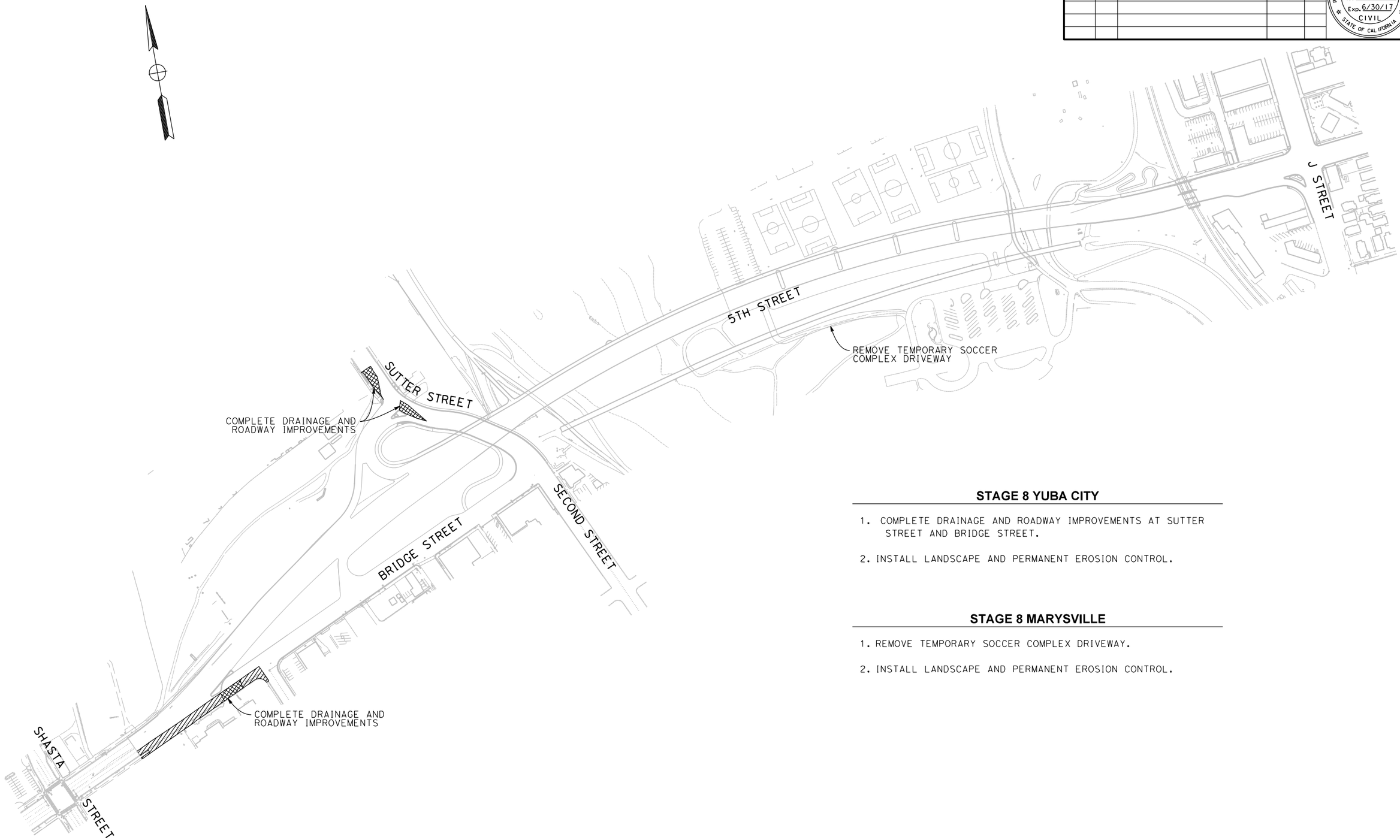

STAGE 8 YUBA CITY

1. COMPLETE DRAINAGE AND ROADWAY IMPROVEMENTS AT SUTTER STREET AND BRIDGE STREET.
2. INSTALL LANDSCAPE AND PERMANENT EROSION CONTROL.

STAGE 8 MARYSVILLE

1. REMOVE TEMPORARY SOCCER COMPLEX DRIVEWAY.
2. INSTALL LANDSCAPE AND PERMANENT EROSION CONTROL.

FOR REDUCED PLANS
ORIGINAL SCALE IS IN INCHES
0 1 2 3
ALL DIMENSIONS SHOWN IN FEET
UNLESS OTHERWISE NOTED

SC-8

PLAN SCALE:
PROFILE SCALE:
HORIZ:
VERT:

CONTRACT NO: 17-XX
DESIGNED: N. DONNELLY
DRAWN: E. ESPINOZA
CHECKED:
RECORD DRAWING: DATE:

DOKKEN ENGINEERING
110 BLUE RAVINE ROAD #200
FOLSOM, CA 95630
PHONE: (916) 858-0642
FAX: (916) 858-0643

CITY OF YUBA CITY

5TH STREET BRIDGE REPLACEMENT
STAGE 8 CONSTRUCTION

SHEET NO.
OF
215

8/15/2016

...\511\1858ma008.dgn

REVISION #	DATE:	DESCRIPTION AND SHEET NO.:	APPROVED BY:	DATE:

REGISTERED PROFESSIONAL ENGINEER
NATHAN J. DONNELLY
No. 64459
Exp. 6/30/17
CIVIL
STATE OF CALIFORNIA

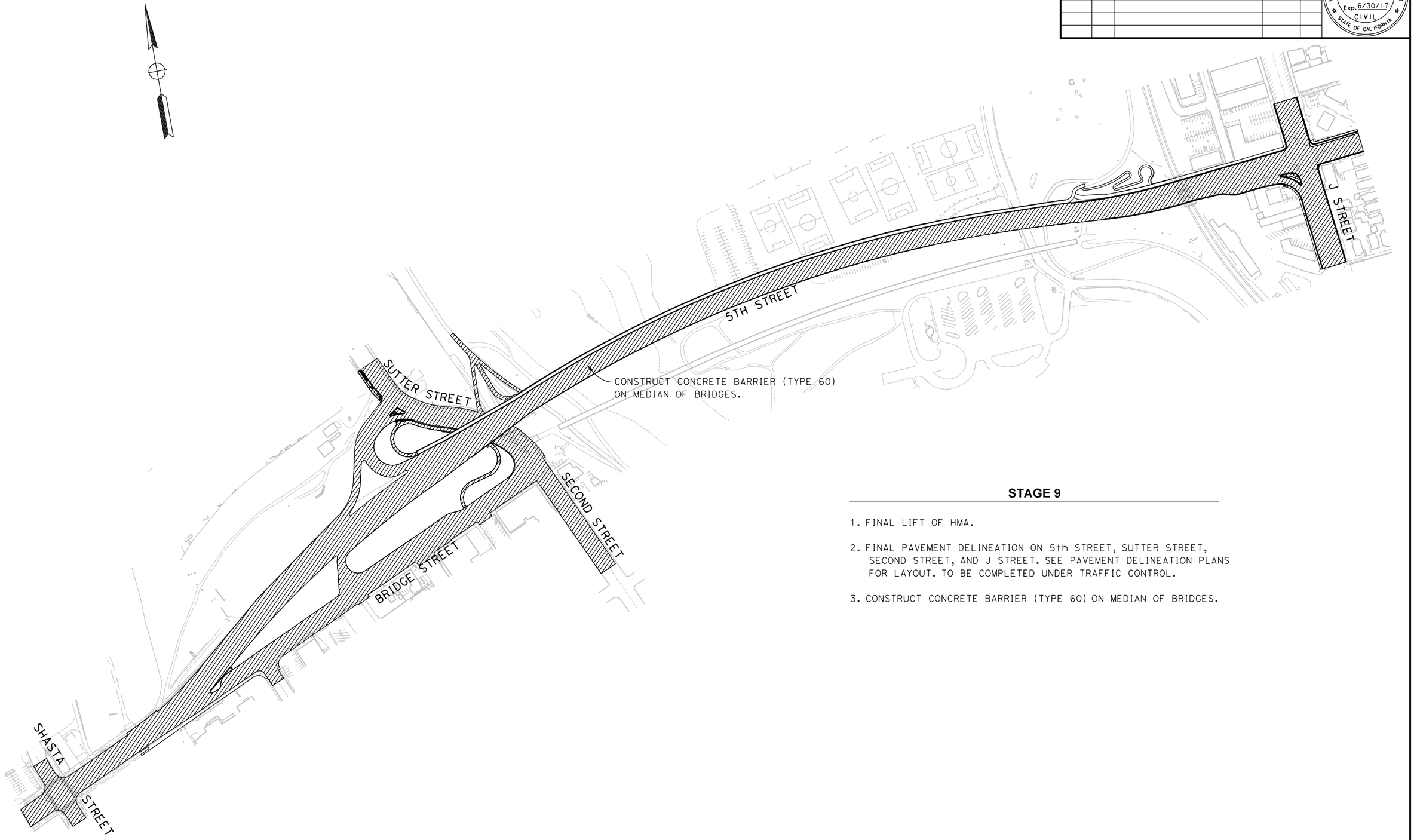

STAGE 9

1. FINAL LIFT OF HMA.

2. FINAL PAVEMENT DELINEATION ON 5th STREET, SUTTER STREET, SECOND STREET, AND J STREET. SEE PAVEMENT DELINEATION PLANS FOR LAYOUT. TO BE COMPLETED UNDER TRAFFIC CONTROL.

3. CONSTRUCT CONCRETE BARRIER (TYPE 60) ON MEDIAN OF BRIDGES.

FOR REDUCED PLANS
ORIGINAL SCALE IS IN INCHES

0 1 2 3

ALL DIMENSIONS SHOWN IN FEET
UNLESS OTHERWISE NOTED

SC-9

PLAN SCALE:
PROFILE SCALE:
HORIZ:
VERT:

CONTRACT NO: **17-XX**
DESIGNED: N. DONNELLY
DRAWN: E. ESPINOZA
CHECKED:
RECORD DRAWING: DATE:

DOKKEN ENGINEERING
110 BLUE RAVINE ROAD #200
FOLSOM, CA 95630
PHONE: (916) 858-0642
FAX: (916) 985-1845

CITY OF **YUBA CITY**

5TH STREET BRIDGE REPLACEMENT
STAGE 9 CONSTRUCTION

SHEET NO.
OF
215

8/15/2016
...\511\1858ma009.dgn

LEGEND:

- [1] TEMPORARY TRAFFIC STRIPE (PAINT)
- TACC - TEMPORARY ALTERNATIVE CRASH CUSHION
- TEMPORARY CRASH CUSHION SAND FILLED
- TYPE IV ARROW
- TYPE VII ARROW
- TYPE VIII ARROW
- PORTABLE DELINEATORS SPACING AS NOTED
- TEMPORARY DELINEATORS (CLASS 1, SURFACE MOUNTED) SPACING AS NOTED
- (E) EXISTING
- (P) PROPOSED
- CONSTRUCTION AREA
- CONSTRUCTION AREA UNDER TRAFFIC CONTROL
- TEMPORARY RAILING (TYPE K)
- PEDESTRIAN BARRICADE
- TYPE III BARRICADE
- TEMPORARY SIGN
- CHANGE IN TEMPORARY PAVEMENT DELINEATION DETAIL
- BEGIN/ END TEMPORARY PAVEMENT DELINEATION DETAIL
- REMOVE THERMOPLASTIC STRIPING

NOTE:

1. ALL EXISTING STRIPING AND PAVEMENT MARKINGS TO BE REMOVED PRIOR TO PLACEMENT WITH TEMPORARY TRAFFIC HANDLING.
2. FOR RESTRICTIONS ON EASTBOUND ON-RAMP AND SECOND STREET CLOSURES, SEE SHEET SC-1.
3. TEMPORARY DELINEATOR TO BE ORANGE POSTS WITH WHITE RETROFLECTIVE SHEETING.

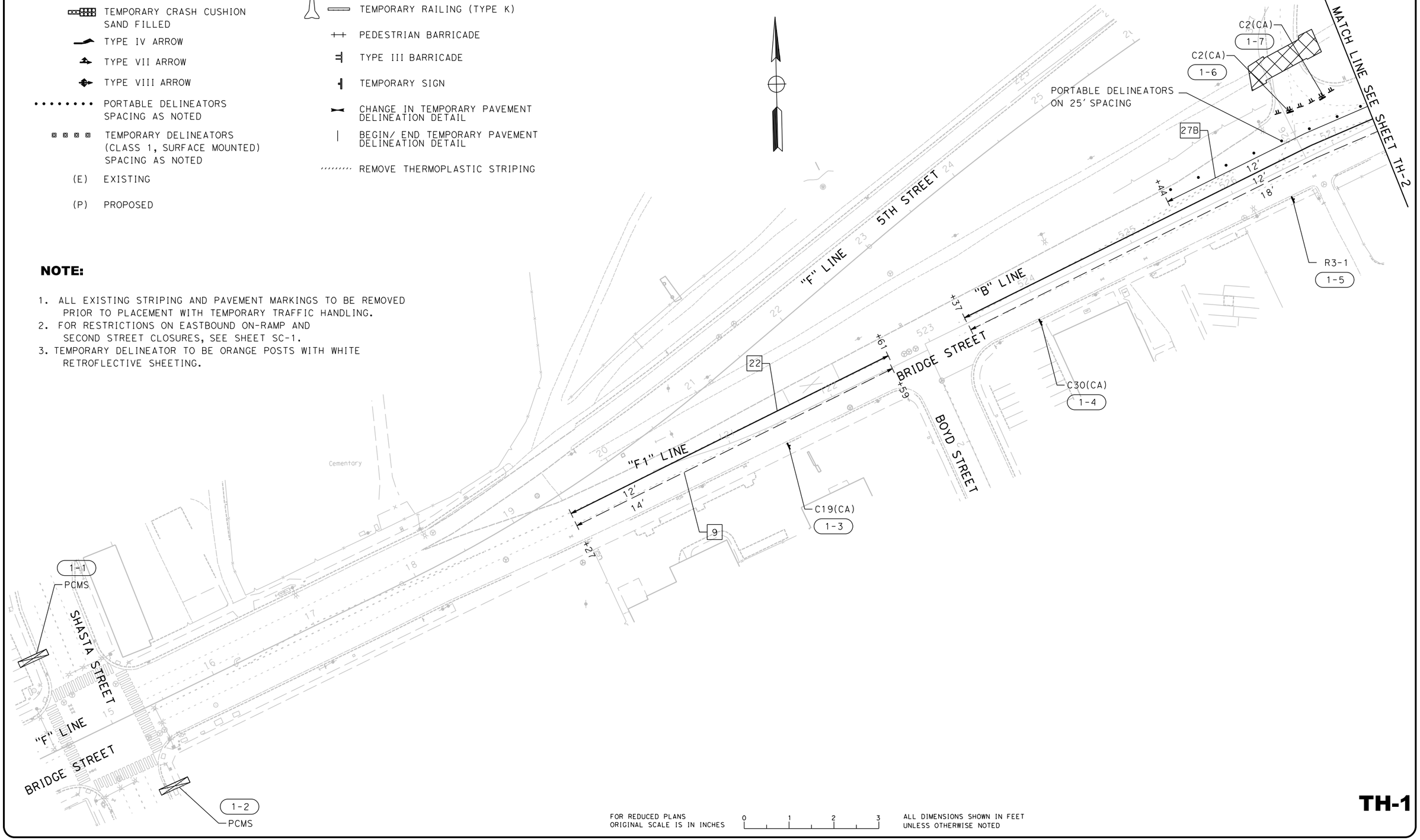

FOR REDUCED PLANS ORIGINAL SCALE IS IN INCHES 0 1 2 3

ALL DIMENSIONS SHOWN IN FEET UNLESS OTHERWISE NOTED

REVISION *	DATE*	DESCRIPTION AND SHEET NO.*	APPROVED BY*	DATE*

REGISTERED PROFESSIONAL ENGINEER
NATHAN J. DONNELLY
No. 64459
Exp. 6/30/17
CIVIL
STATE OF CALIFORNIA

PLAN SCALE: 1"=40'
PROFILE SCALE:
HORIZ:
VERT:

CONTRACT NO: 17-XX
DESIGNED: N. DONNELLY
DRAWN: E. ESPINOZA
CHECKED:
RECORD DRAWING:
DATE:

DOKKEN ENGINEERING
110 BLUE RAVINE ROAD 7200
FOLSOM, CA 95630
PHONE: (916) 858-0642
FAX: (916) 858-0643

CITY OF YUBA CITY

5TH STREET BRIDGE REPLACEMENT

STAGE 1
TRAFFIC HANDLING PLAN

SHEET NO.
OF
215

TH-1

8/15/2016

...\51\1858md001.dgn

REVISION #	DATE:	DESCRIPTION AND SHEET NO.:	APPROVED BY:	DATE:

REGISTERED PROFESSIONAL ENGINEER
NATHAN J. DONNELLY
No. 64459
Exp. 6/30/17
CIVIL
STATE OF CALIFORNIA

PLAN SCALE: 1"=40'
PROFILE SCALE:
HORIZ:
VERT:

CONTRACT NO: 17-XX
DESIGNED: N. DONNELLY
DRAWN: E. ESPINOZA
CHECKED:
RECORD DRAWING:
DATE:

DOKKEN ENGINEERING
110 BLUE RAVINE ROAD #200
FOLSOM, CA 95630
PHONE: (916) 858-0642
FAX: (916) 985-1845

CITY OF YUBA CITY

5TH STREET BRIDGE REPLACEMENT
STAGE 1
TRAFFIC HANDLING PLAN

SHEET NO.
OF
215

TH-2

8/15/2016

...\511\1858md002.dgn

SUTTER STREET
PCMS 2-1
9
Ped BARRICADE WITH R9-11 2-2
PORTABLE DELINEATOR AT 5' SPACING
"S" LINE
PORTABLE DELINEATOR AT 5' SPACING
C2(CA) 2-3
C2(CA) 2-4
PORTABLE DELINEATOR AT 25' SPACING
C19(CA) 2-5
WB OFF-RAMP
"F4" LINE
5TH STREET
"F2" LINE
"F" LINE
R11-2 2-12
C30(CA) 2-13
PORTABLE DELINEATOR AT 5' SPACING
W4-2L 2-14
R11-2 2-16
C19(CA) 2-11
27B
22
SECOND STREET
"S" LINE
PCMS 2-15
PORTABLE DELINEATOR AT 25' SPACING
C30(CA) 2-10
BRIDGE STREET
"B" LINE
Ped BARRICADE WITH R9-11a 2-9
Ped BARRICADE WITH R9-11a 2-8
Ped BARRICADE WITH R9-11a 2-7
R3-1 2-6
MATCH LINE SEE SHEET TH-1

FOR REDUCED PLANS ORIGINAL SCALE IS IN INCHES
0 1 2 3
ALL DIMENSIONS SHOWN IN FEET UNLESS OTHERWISE NOTED

REVISION #	DATE:	DESCRIPTION AND SHEET NO.:	APPROVED BY:	DATE:

REGISTERED PROFESSIONAL ENGINEER
NATHAN J. DONNELLY
No. 64459
Exp. 6/30/17
CIVIL
STATE OF CALIFORNIA

PLAN SCALE: 1"=40'
PROFILE SCALE:
HORIZ:
VERT:

CONTRACT NO: 17-XX
DESIGNED: N. DONNELLY
DRAWN: E. ESPINOZA
CHECKED:
RECORD DRAWING: DATE:

DOKKEN ENGINEERING
110 BLUE RAVINE ROAD #200
FOLSOM, CA 95630
PHONE: (916) 858-0642
FAX: (916) 858-0643

CITY OF YUBA CITY

5TH STREET BRIDGE REPLACEMENT
STAGE 1
TRAFFIC HANDLING PLAN

SHEET NO.
OF
215

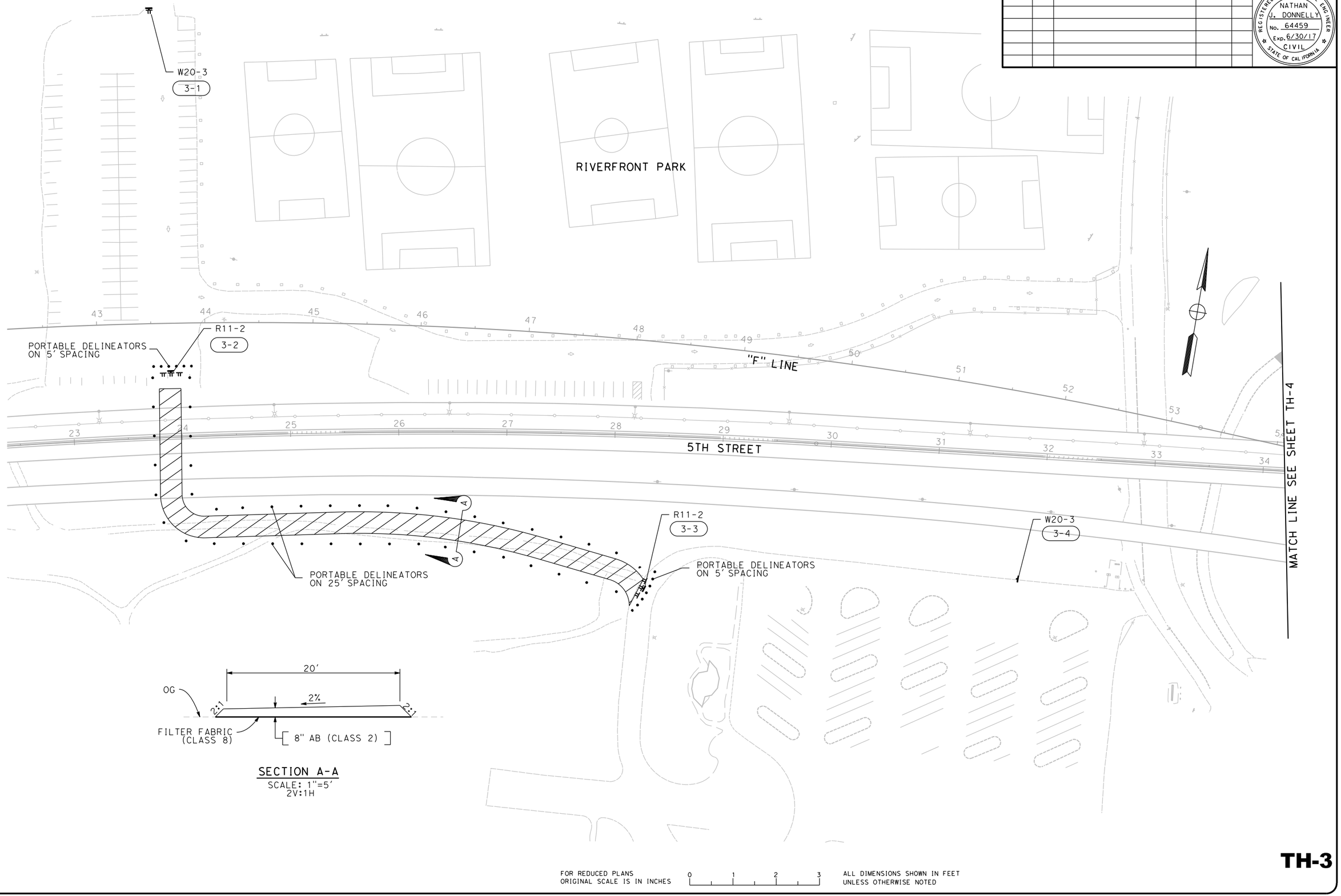

SECTION A-A
SCALE: 1"=5'
2V:1H

TH-3

FOR REDUCED PLANS
ORIGINAL SCALE IS IN INCHES

0 1 2 3

ALL DIMENSIONS SHOWN IN FEET
UNLESS OTHERWISE NOTED

8/15/2016

...\511\1858md003.dgn

...\511\1858md004.dgn 8/15/2016

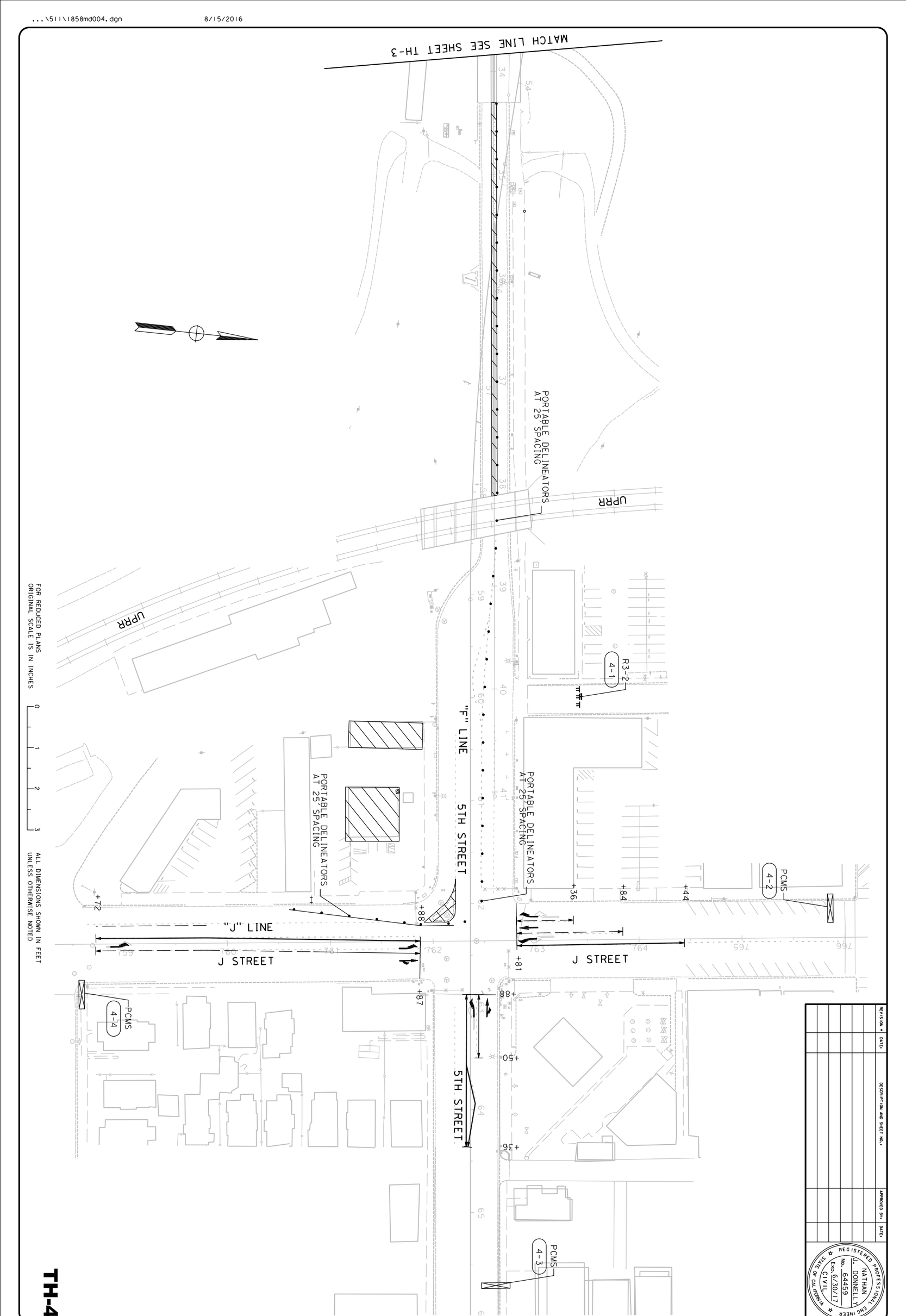

FOR REDUCED PLANS
ORIGINAL SCALE IS IN INCHES

0 1 2 3

ALL DIMENSIONS SHOWN IN FEET
UNLESS OTHERWISE NOTED

TH-4

REVISION *	DATE:	DESCRIPTION AND SHEET NO.*	APPROVED BY:	DATE:

REGISTERED PROFESSIONAL ENGINEER
NATHAN J. DONNELLY
No. 64459
Exp. 6/30/17
CIVIL
STATE OF CALIFORNIA

SHEET NO. 215 OF

5TH STREET BRIDGE REPLACEMENT
STAGE 1 TRAFFIC HANDLING PLAN

CITY OF YUBA CITY

DOKKEN ENGINEERING
110 BLUE RAVINE ROAD #200
FOLSOM, CA 95630
PHONE: (916) 858-0642
FAX: (916) 858-0643

CONTRACT NO: 17-XX

DESIGNED: N. DONNELLY
DRAWN: E. ESPINOZA
CHECKED:
RECORD DRAWING: DATE:

PLAN SCALE: 1"=40'
PROFILE SCALE:
HORIZ:
VERT:

REVISION #	DATE:	DESCRIPTION AND SHEET NO.:	APPROVED BY:	DATE:

REGISTERED PROFESSIONAL ENGINEER
NATHAN J. DONNELLY
No. 64459
Exp. 6/30/17
CIVIL
STATE OF CALIFORNIA

BASIN GRADING

MATCH LINE SEE SHEET TH-6

MATCH LINE SEE SHEET TH-6

5TH STREET

"F" LINE

"B" LINE

"F1" LINE

BRIDGE STREET

BOYD STREET

SHASTA STREET

Cementery

+67

+30

+56

+51

+54

9

22

27B

38

27B

W3-3

5-1

FOR REDUCED PLANS
ORIGINAL SCALE IS IN INCHES

0 1 2 3

ALL DIMENSIONS SHOWN IN FEET
UNLESS OTHERWISE NOTED

TH-5

PLAN SCALE: 1"=40'
PROFILE SCALE:
HORIZ:
VERT:

CONTRACT NO: 17-XX
DESIGNED: N. DONNELLY
DRAWN: E. ESPINOZA
CHECKED:
RECORD DRAWING:
DATE:

DOKKEN ENGINEERING
110 BLUE RAVINE ROAD #200
FOLSOM, CA 95630
PHONE: (916) 858-0642
FAX: (916) 858-0643

CITY OF
YUBA CITY

5TH STREET BRIDGE REPLACEMENT
STAGE 2
TRAFFIC HANDLING PLAN

SHEET NO.
OF
215

8/15/2016

...\511\1858md005.dgn

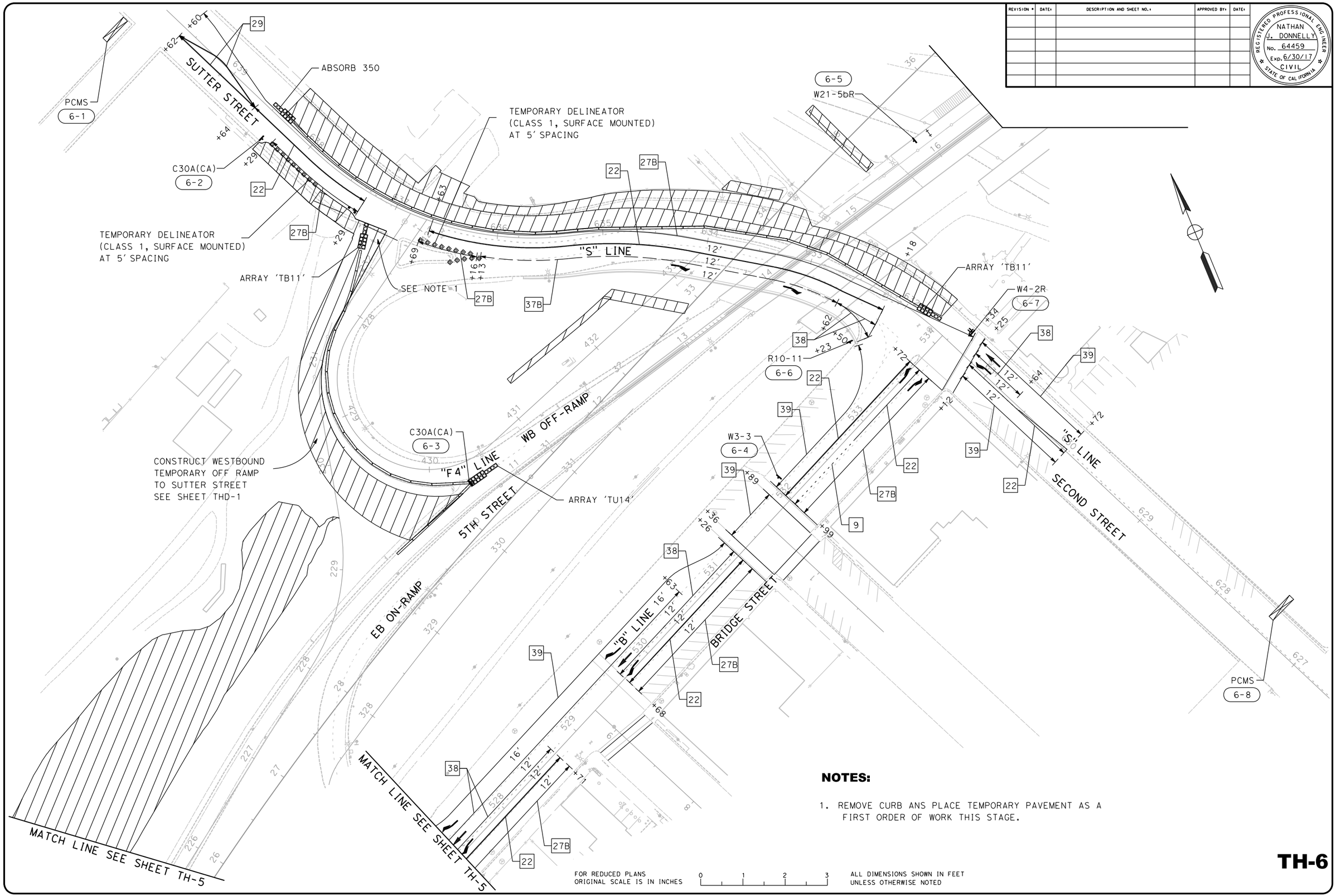

NOTES:

1. REMOVE CURB ANS PLACE TEMPORARY PAVEMENT AS A FIRST ORDER OF WORK THIS STAGE.

FOR REDUCED PLANS ORIGINAL SCALE IS IN INCHES 0 1 2 3

ALL DIMENSIONS SHOWN IN FEET UNLESS OTHERWISE NOTED

REVISION #	DATE:	DESCRIPTION AND SHEET NO.:	APPROVED BY:	DATE:

REGISTERED PROFESSIONAL ENGINEER
NATHAN J. DONNELLY
No. 64459
Exp. 6/30/17
CIVIL
STATE OF CALIFORNIA

PLAN SCALE: 1"=40'
PROFILE SCALE:
HORIZ:
VERT:

CONTRACT NO: 17-XX
DESIGNED: N. DONNELLY
DRAWN: E. ESPINOZA
CHECKED:
RECORD DRAWING:
DATE:

DOKKEN ENGINEERING
110 BLUE RAVINE ROAD #200
FOLSOM, CA 95630
PHONE: (916) 858-0642
FAX: (916) 858-0643

CITY OF YUBA CITY

5TH STREET BRIDGE REPLACEMENT
STAGE 2
TRAFFIC HANDLING PLAN

SHEET NO. OF 215

TH-6

8/15/2016

...\511\1858md006.dgn

REVISION #	DATE:	DESCRIPTION AND SHEET NO.:	APPROVED BY:	DATE:

REGISTERED PROFESSIONAL ENGINEER
NATHAN J. DONNELLY
No. 64459
Exp. 6/30/17
CIVIL
STATE OF CALIFORNIA

PLAN SCALE: 1"=40'
PROFILE SCALE:
HORIZ:
VERT:

CONTRACT NO: 17-XX
DESIGNED: N. DONNELLY
DRAWN: E. ESPINOZA
CHECKED:
RECORD DRAWING:
DATE:

DOKKEN ENGINEERING
110 BLUE RAVINE ROAD #200
FOLSOM, CA 95630
PHONE: (916) 858-0642
FAX: (916) 985-1845

CITY OF YUBA CITY

5TH STREET BRIDGE REPLACEMENT

STAGE 2 TRAFFIC HANDLING PLAN

SHEET NO. 3
OF 215

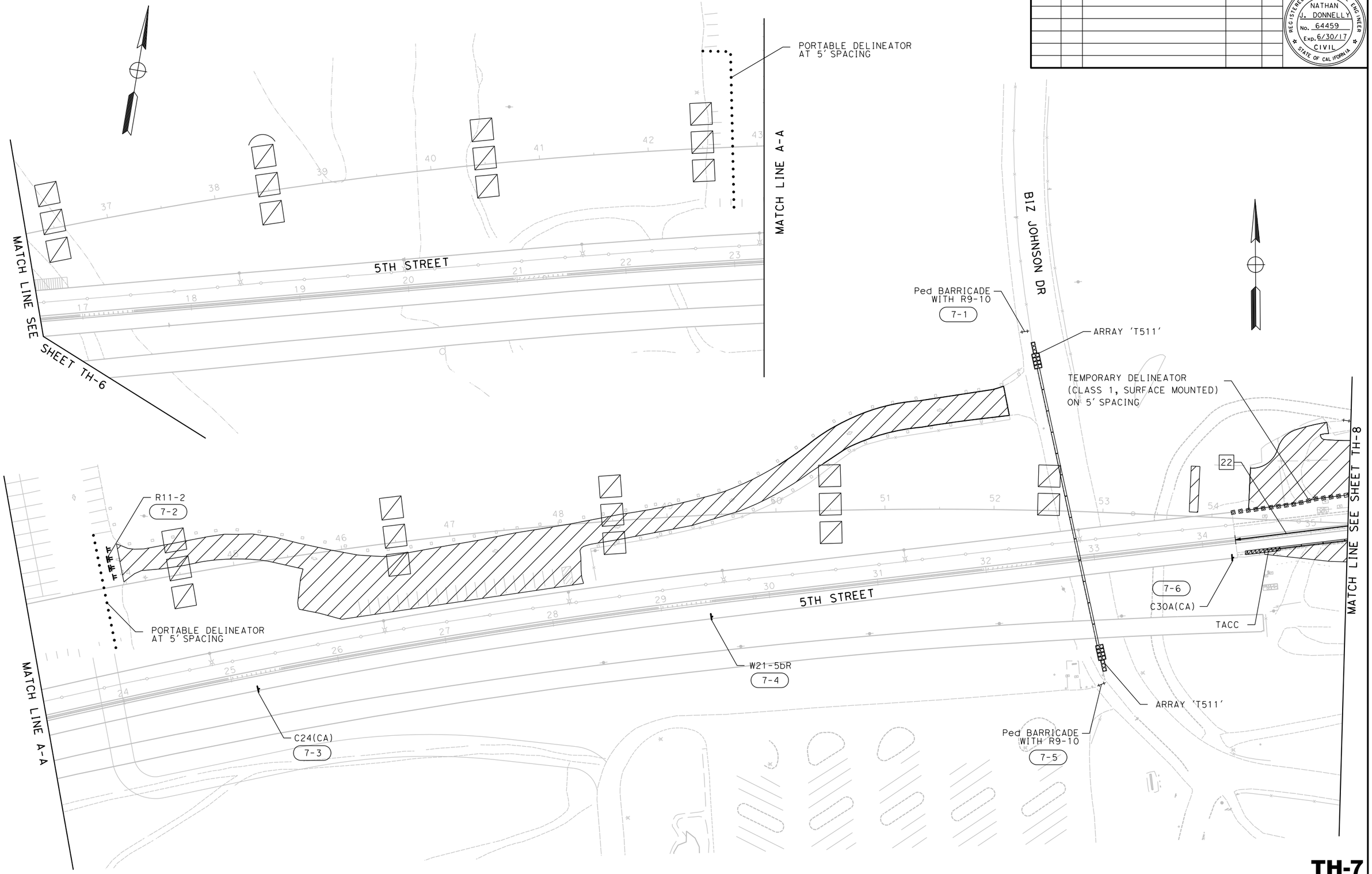

TH-7

FOR REDUCED PLANS ORIGINAL SCALE IS IN INCHES 0 1 2 3 ALL DIMENSIONS SHOWN IN FEET UNLESS OTHERWISE NOTED

8/15/2016

...\511\1858md007.dgn

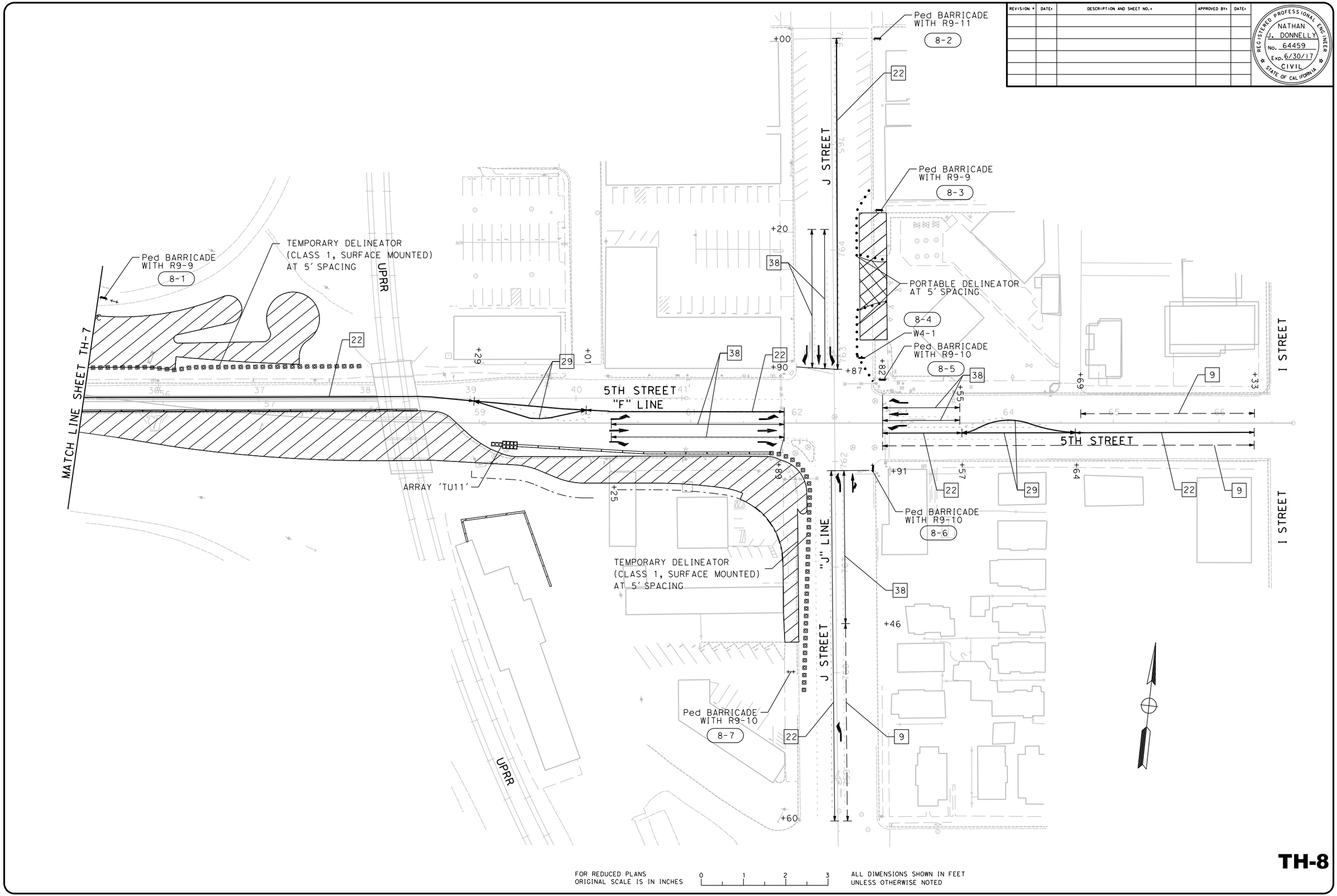

REVISION #	DATE:	DESCRIPTION AND SHEET NO.:	APPROVED BY:	DATE:

REGISTERED PROFESSIONAL ENGINEER
NATHAN J. DONNELLY
No. 64459
Exp. 6/30/17
CIVIL
STATE OF CALIFORNIA

PLAN SCALE: 1"=40'
PROFILE SCALE:
HORIZ:
VERT:

CONTRACT NO: 17-XX
DESIGNED: N. DONNELLY
DRAWN: E. ESPINOZA
CHECKED:
RECORD DRAWING:
DATE:

DOKKEN ENGINEERING
110 BLUE RAVINE ROAD #200
FOLSOM, CA 95630
PHONE: (916) 858-0642
FAX: (916) 858-0643

CITY OF YUBA CITY

5TH STREET BRIDGE REPLACEMENT
STAGE 2
TRAFFIC HANDLING PLAN

SHEET NO.
OF
215

TH-8

FOR REDUCED PLANS ORIGINAL SCALE IS IN INCHES 0 1 2 3
ALL DIMENSIONS SHOWN IN FEET UNLESS OTHERWISE NOTED

8/15/2016
...\511\1858md008.dgn

REVISION *	DATE*	DESCRIPTION AND SHEET NO.*	APPROVED BY*	DATE*

REGISTERED PROFESSIONAL ENGINEER
NATHAN J. DONNELLY
No. 64459
Exp. 6/30/17
CIVIL
STATE OF CALIFORNIA

MATCH LINE SEE SHEET TH-10

MATCH LINE SEE SHEET TH-10

"F" LINE 5TH STREET

"B" LINE

BRIDGE STREET

BOYD STREET

"F1" LINE

"F" LINE

BRIDGE STREET

SHASTA STREET

Cementary

W3-3
9-1

FOR REDUCED PLANS
ORIGINAL SCALE IS IN INCHES

0 1 2 3

ALL DIMENSIONS SHOWN IN FEET
UNLESS OTHERWISE NOTED

TH-9

8/15/2016

...\511\1858md009.dgn

PLAN SCALE: 1"=40'
PROFILE SCALE:
HORIZ:
VERT:

CONTRACT NO: **17-XX**
DESIGNED: N. DONNELLY
DRAWN: E. ESPINOZA
CHECKED:
RECORD DRAWING:
DATE:

DOKKEN ENGINEERING
110 BLUE RAVINE ROAD 1200
FOLSOM, CA 95630
PHONE: (916) 858-0642
FAX: (916) 858-0643

CITY OF
YUBA CITY

5TH STREET BRIDGE REPLACEMENT
STAGE 3
TRAFFIC HANDLING PLAN

SHEET NO.
OF
215

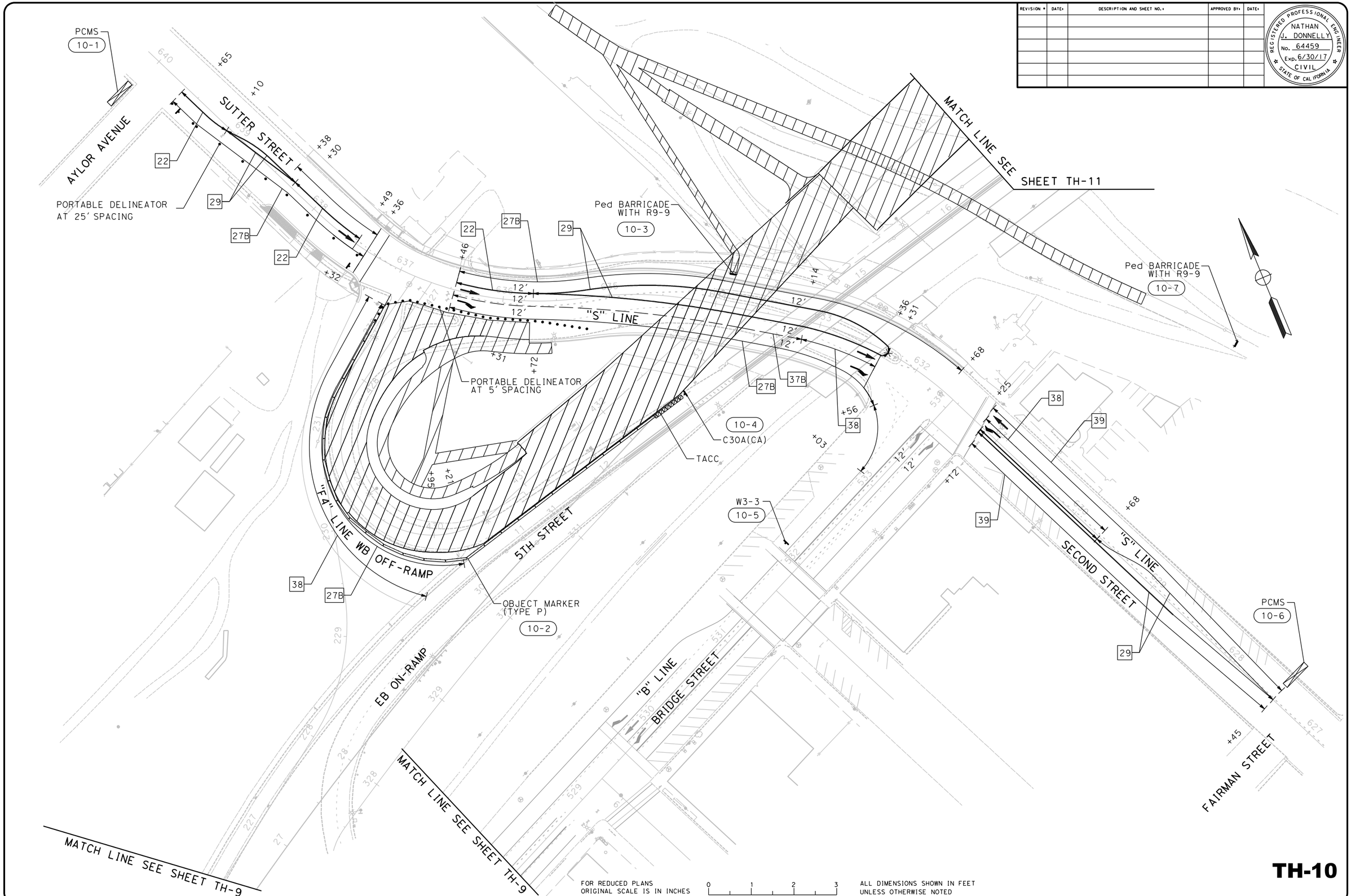

REVISION #	DATE:	DESCRIPTION AND SHEET NO.:	APPROVED BY:	DATE:

REGISTERED PROFESSIONAL ENGINEER
NATHAN J. DONNELLY
No. 64459
Exp. 6/30/17
CIVIL
STATE OF CALIFORNIA

FOR REDUCED PLANS ORIGINAL SCALE IS IN INCHES 0 1 2 3

ALL DIMENSIONS SHOWN IN FEET UNLESS OTHERWISE NOTED

PLAN SCALE: 1"=40'
PROFILE SCALE:
HORIZ:
VERT:

CONTRACT NO: 17-XX
DESIGNED: N. DONNELLY
DRAWN: E. ESPINOZA
CHECKED:
RECORD DRAWING:
DATE:

DOKKEN ENGINEERING
110 BLUE RAVINE ROAD #200
FOLSOM, CA 95630
PHONE: (916) 858-0642
FAX: (916) 858-0643

CITY OF YUBA CITY

5TH STREET BRIDGE REPLACEMENT
STAGE 3
TRAFFIC HANDLING PLAN

SHEET NO. OF 215

TH-10

8/15/2016

...\511\1858md010.dgn

REVISION #	DATE:	DESCRIPTION AND SHEET NO.:	APPROVED BY:	DATE:

REGISTERED PROFESSIONAL ENGINEER
NATHAN J. DONNELLY
No. 64459
Exp. 6/30/17
CIVIL
STATE OF CALIFORNIA

MATCH LINE A-A

MATCH LINE SEE SHEET TH-10

5TH STREET

W21-5bR
11-1

W21-5
11-2

B1Z JOHNSON DR

+20

+25

27B

29

27B

5TH STREET

MATCH LINE A-A

MATCH LINE SEE SHEET TH-12

TH-11

FOR REDUCED PLANS
ORIGINAL SCALE IS IN INCHES

0 1 2 3

ALL DIMENSIONS SHOWN IN FEET
UNLESS OTHERWISE NOTED

PLAN SCALE: 1"=40'
PROFILE SCALE:
HORIZ:
VERT:

CONTRACT NO: **17-XX**
DESIGNED: N. DONNELLY
DRAWN: E. ESPINOZA
CHECKED:
RECORD DRAWING: DATE:

DOKKEN ENGINEERING
110 BLUE RAVINE ROAD #200
FOLSOM, CA 95630
PHONE: (916) 858-0642
FAX: (916) 858-0643

CITY OF
YUBA CITY

5TH STREET BRIDGE REPLACEMENT
STAGE 3
TRAFFIC HANDLING PLAN

SHEET NO.
OF
215

8/15/2016

...\511\1858md011.dgn

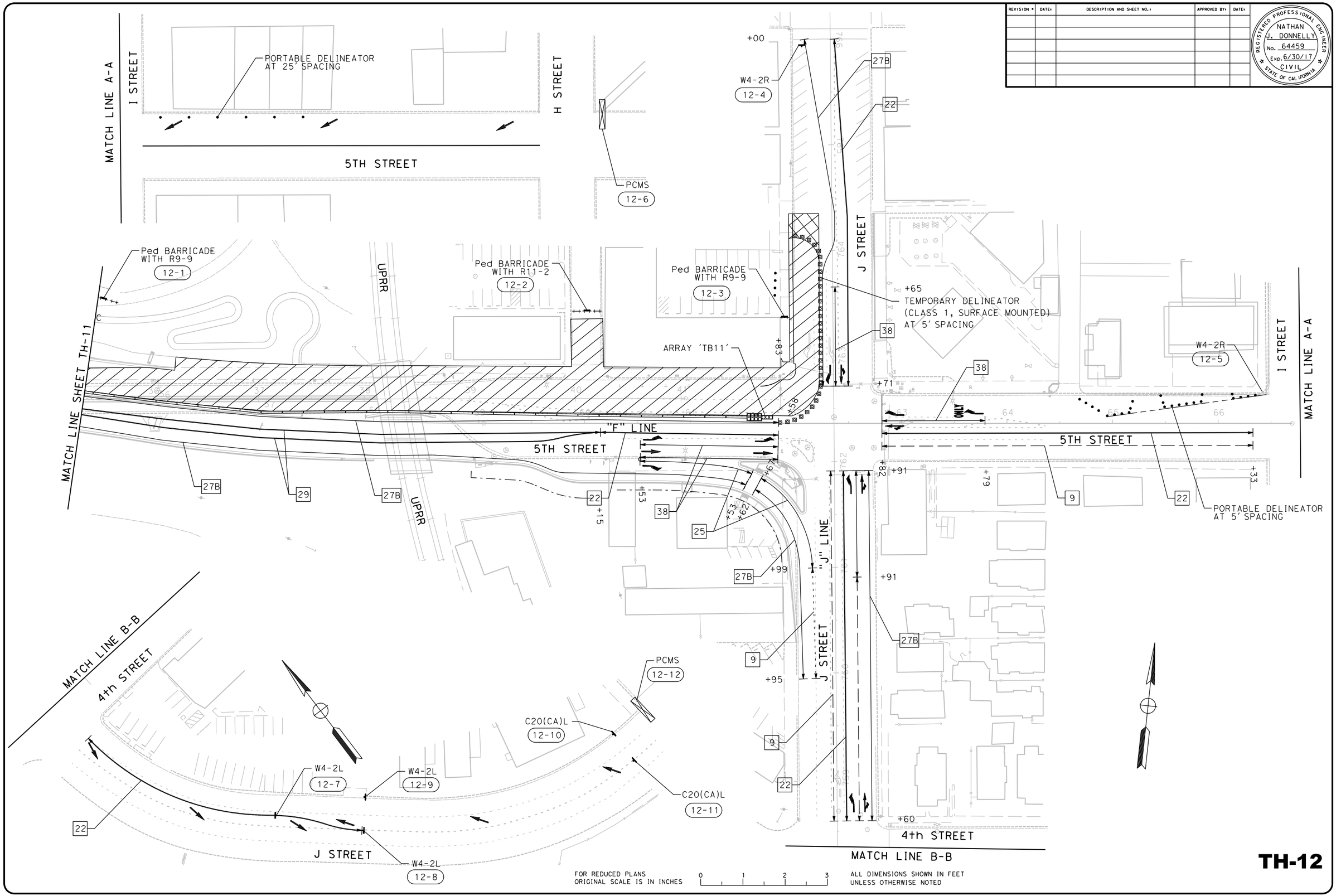

REVISION #	DATE:	DESCRIPTION AND SHEET NO.:	APPROVED BY:	DATE:

REGISTERED PROFESSIONAL ENGINEER
NATHAN J. DONNELLY
No. 64459
Exp. 6/30/17
CIVIL
STATE OF CALIFORNIA

PLAN SCALE: 1"=40'
PROFILE SCALE:
HORIZ:
VERT:

CONTRACT NO: 17-XX
DESIGNED: N. DONNELLY
DRAWN: E. ESPINOZA
CHECKED:
RECORD DRAWING:
DATE:

DOKKEN ENGINEERING
110 BLUE RAVINE ROAD #200
FOLSOM, CA 95630
PHONE: (916) 858-0642
FAX: (916) 858-0643

CITY OF YUBA CITY

5TH STREET BRIDGE REPLACEMENT
STAGE 3
TRAFFIC HANDLING PLAN

TH-12

SHEET NO.
OF
215

8/15/2016
...\511\1858md012.dgn

REVISION #	DATE:	DESCRIPTION AND SHEET NO.:	APPROVED BY:	DATE:

REGISTERED PROFESSIONAL ENGINEER
NATHAN J. DONNELLY
No. 64459
Exp. 6/30/17
CIVIL
STATE OF CALIFORNIA

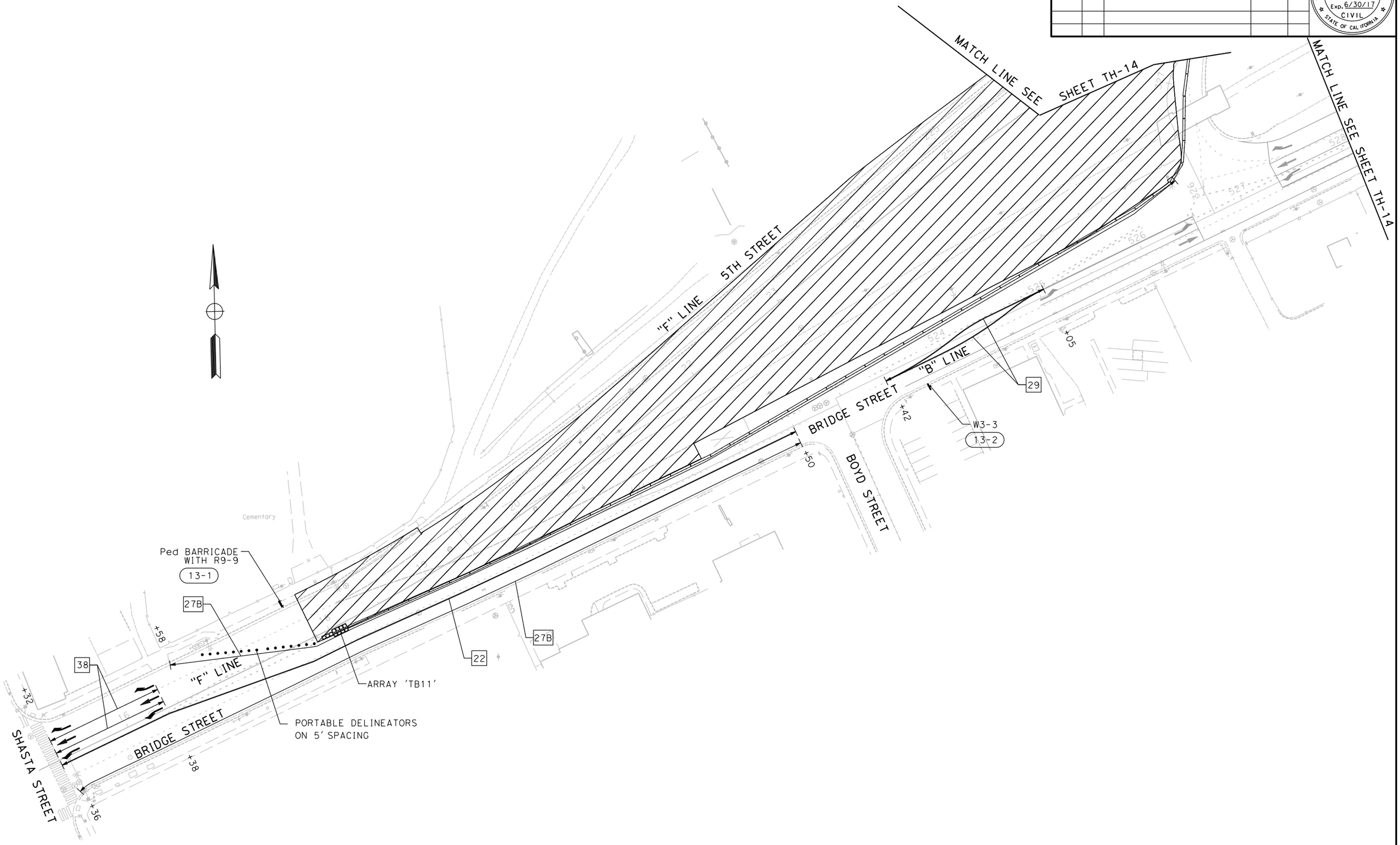

FOR REDUCED PLANS ORIGINAL SCALE IS IN INCHES 0 1 2 3

ALL DIMENSIONS SHOWN IN FEET UNLESS OTHERWISE NOTED

TH-13

PLAN SCALE: 1"=40'
PROFILE SCALE:
HORIZ:
VERT:

CONTRACT NO: **17-XX**
DESIGNED: N. DONNELLY
DRAWN: E. ESPINOZA
CHECKED:
RECORD DRAWING:
DATE:

DOKKEN ENGINEERING
110 BLUE RAVINE ROAD 1200
FOLSOM, CA 95630
PHONE: (916) 858-0642
FAX: (916) 858-0643

CITY OF **YUBA CITY**

5TH STREET BRIDGE REPLACEMENT
STAGE 4
TRAFFIC HANDLING PLAN

SHEET NO.
OF
215

8/15/2016

...\5111858md013.dgn

REVISION #	DATE:	DESCRIPTION AND SHEET NO.:	APPROVED BY:	DATE:

REGISTERED PROFESSIONAL ENGINEER
NATHAN J. DONNELLY
No. 64459
Exp. 6/30/17
CIVIL
STATE OF CALIFORNIA

PCMS 14-1

AYLOR AVENUE

SUTTER STREET

PORTABLE DELINEATOR AT 5' SPACING

MATCH LINE SEE SHEET TH-15

"S" LINE

"F4" LINE WB OFF-RAMP

EB ON-RAMP

5TH STREET

"B" LINE

BRIDGE STREET

W3-3 14-2

"S" LINE SECOND STREET

PCMS 14-3

FAIRMAN STREET

MATCH LINE SEE SHEET TH-13

MATCH LINE SEE SHEET TH-13

FOR REDUCED PLANS ORIGINAL SCALE IS IN INCHES 0 1 2 3

ALL DIMENSIONS SHOWN IN FEET UNLESS OTHERWISE NOTED

TH-14

PLAN SCALE: 1"=40'
PROFILE SCALE:
HORIZ:
VERT:

CONTRACT NO: **17-XX**
DESIGNED: N. DONNELLY
DRAWN: E. ESPINOZA
CHECKED:
RECORD DRAWING: DATE:

DOKKEN ENGINEERING
110 BLUE RAVINE ROAD #200
FOLSOM, CA 95630
PHONE: (916) 858-0642
FAX: (916) 858-0643

CITY OF **YUBA CITY**

5TH STREET BRIDGE REPLACEMENT
STAGE 4
TRAFFIC HANDLING PLAN

SHEET NO.
OF
215

...\511\858md014.dgn
8/15/2016

REVISION #	DATE:	DESCRIPTION AND SHEET NO.:	APPROVED BY:	DATE:

REGISTERED PROFESSIONAL ENGINEER
NATHAN J. DONNELLY
No. 64459
Exp. 6/30/17
CIVIL
STATE OF CALIFORNIA

PLAN SCALE: 1"=40'
PROFILE SCALE:
HORIZ:
VERT:

CONTRACT NO: **17-XX**

DESIGNED: N. DONNELLY
DRAWN: E. ESPINOZA
CHECKED:
RECORD DRAWING: DATE:

DOKKEN ENGINEERING
110 BLUE RAVINE ROAD #200
FOLSOM, CA 95630
PHONE: (916) 858-0642
FAX: (916) 858-0943

CITY OF **YUBA CITY**

5TH STREET BRIDGE REPLACEMENT

STAGE 4 TRAFFIC HANDLING PLAN

SHEET NO.
OF
215

MATCH LINE SEE SHEET TH-14

MATCH LINE A-A

12'

6'

27B

22

5TH STREET

12'

MATCH LINE A-A

B1Z JOHNSON DR

12'

6'

27B

22

5TH STREET

12'

92+

22

MATCH LINE SEE SHEET TH-16

TH-15

FOR REDUCED PLANS
ORIGINAL SCALE IS IN INCHES

0 1 2 3

ALL DIMENSIONS SHOWN IN FEET
UNLESS OTHERWISE NOTED

8/15/2016

...\511\1858md015.dgn

REVISION #	DATE:	DESCRIPTION AND SHEET NO.:	APPROVED BY:	DATE:

REGISTERED PROFESSIONAL ENGINEER
NATHAN J. DONNELLY
No. 64459
Exp. 6/30/17
CIVIL
STATE OF CALIFORNIA

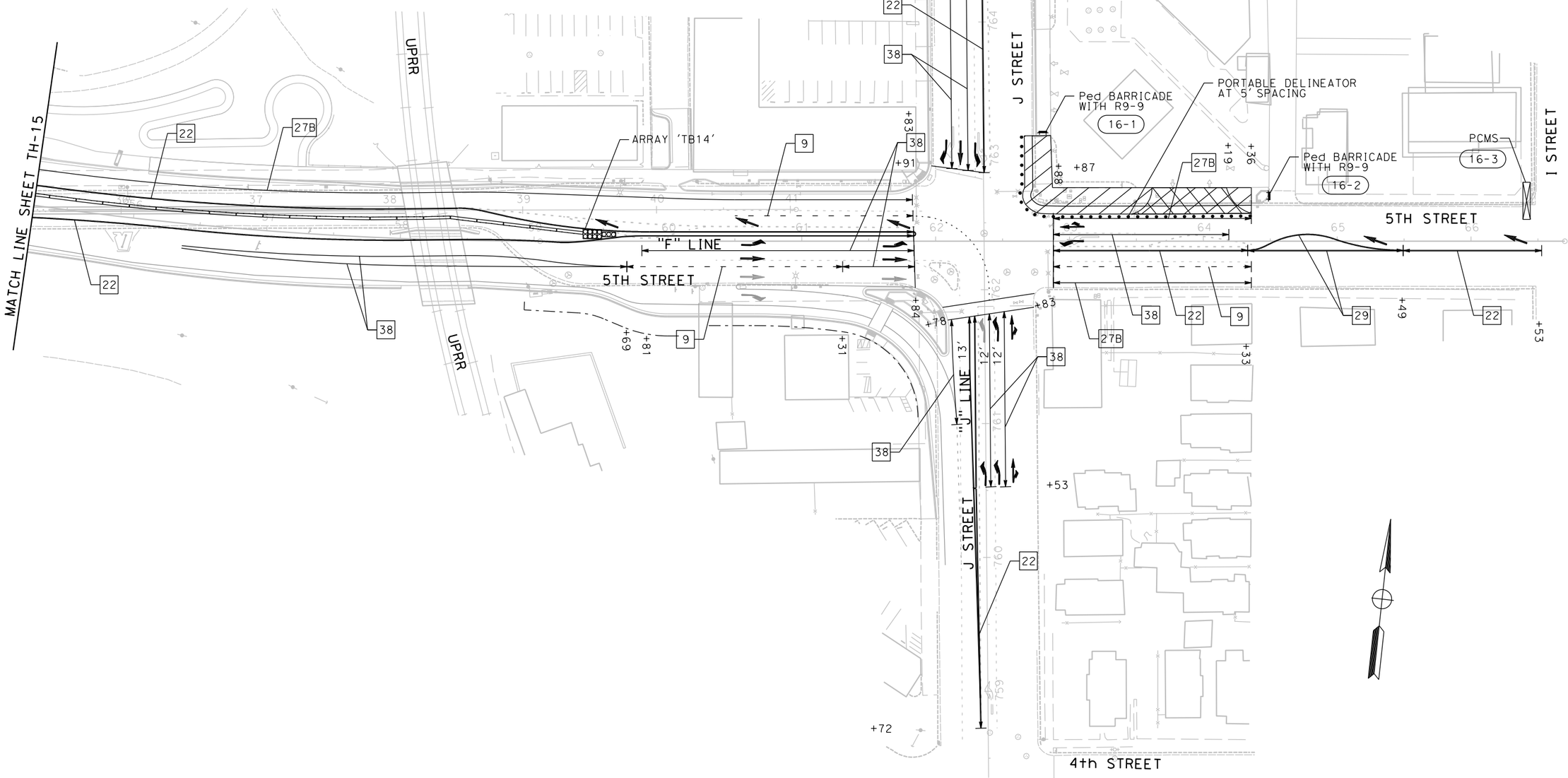

FOR REDUCED PLANS
ORIGINAL SCALE IS IN INCHES
0 1 2 3
ALL DIMENSIONS SHOWN IN FEET
UNLESS OTHERWISE NOTED

TH-16

PLAN SCALE: 1"=40'
PROFILE SCALE:
HORIZ:
VERT:

CONTRACT NO: **17-XX**
DESIGNED: N. DONNELLY
DRAWN: E. ESPINOZA
CHECKED:
RECORD DRAWING: DATE:

DOKKEN ENGINEERING
110 BLUE RAVINE ROAD #200
FOLSOM, CA 95630
PHONE: (916) 858-0642
FAX: (916) 985-1845

CITY OF **YUBA CITY**

5TH STREET BRIDGE REPLACEMENT
STAGE 4
TRAFFIC HANDLING PLAN

SHEET NO.
OF
215

8/15/2016
...\511\1858md016.dgn

REVISION #	DATE	DESCRIPTION AND SHEET NO.	APPROVED BY	DATE

REGISTERED PROFESSIONAL ENGINEER
NATHAN J. DONNELLY
No. 64459
Exp. 6/30/17
CIVIL
STATE OF CALIFORNIA

PLAN SCALE: 1"=40'
PROFILE SCALE:
HORIZ:
VERT:

CONTRACT NO: 17-XX
DESIGNED: N. DONNELLY
DRAWN: E. ESPINOZA
CHECKED:
RECORD DRAWING:
DATE:

DOKKEN ENGINEERING
110 BLUE RAVINE ROAD 7200
FOLSOM, CA 95630
PHONE: (916) 858-0642
FAX: (916) 858-0643

CITY OF YUBA CITY

5TH STREET BRIDGE REPLACEMENT
STAGE 5
TRAFFIC HANDLING PLAN

SHEET NO.
OF
215

MATCH LINE SEE SHEET TH-18

MATCH LINE SEE SHEET TH-18

"F" LINE

5TH STREET

12'
12'

C2(CA)
17-3

C2(CA)
17-7

PORTABLE DELINEATOR
AT 5' SPACING

27B

38

22

12'
12'
12'

+16

+22

R3-1
17-6

27B

+38

+63

+99

"B" LINE

BRIDGE STREET

29

C30(CA)
17-5

+56

ONLY

ONLY

ARRAY 'TB14'

"F1" LINE

BOYD STREET

+70

29

C19(CA)
17-4

Cementary

+54

+90

+53

27B

36

D3-1a
W1-6
17-2

+90

+32

9

38

"F" LINE

PORTABLE DELINEATOR
AT 5' SPACING

BRIDGE STREET

27B

SHASTA STREET

22

+41

17-1
PCMS

TH-17

FOR REDUCED PLANS
ORIGINAL SCALE IS IN INCHES

0 1 2 3

ALL DIMENSIONS SHOWN IN FEET
UNLESS OTHERWISE NOTED

8/15/2016

...\5111\1858md017.dgn

REVISION #	DATE:	DESCRIPTION AND SHEET NO.:	APPROVED BY:	DATE:

REGISTERED PROFESSIONAL ENGINEER
NATHAN J. DONNELLY
No. 64459
Exp. 6/30/17
CIVIL
STATE OF CALIFORNIA

PCMS 18-13

AYLOR AVENUE

SUTTER STREET

MATCH LINE SEE SHEET TH-19

Ped BARRICADE WITH R9-9 (18-4)

PORTABLE DELINEATORS ON 5' SPACING

R11-2 (18-3)

R11-2 (18-2)

"F4" LINE WB OFF-RAMP

C19(CA) (18-1)

PORTABLE DELINEATORS ON 25' SPACING

EB ON-RAMP 5TH STREET

MATCH LINE SEE SHEET TH-17

R11-2 (18-12)

Ped BARRICADE WITH R9-9 (18-11)

PORTABLE DELINEATORS ON 5' SPACING

R11-2 (18-13)

PORTABLE DELINEATORS ON 25' SPACING

C30(CA) (18-7)

"B" LINE

Ped BARRICADE WITH R9-11a (18-9)

Ped BARRICADE WITH R9-11a (18-8)

R3-1 (18-6)

BRIDGE STREET

Ped BARRICADE WITH R9-11a (18-5)

"S" LINE SECOND STREET

PCMS 18-10

FAIRMAN STREET

FOR REDUCED PLANS ORIGINAL SCALE IS IN INCHES 0 1 2 3

ALL DIMENSIONS SHOWN IN FEET UNLESS OTHERWISE NOTED

TH-18

8/15/2016

...\511\1858md018.dgn

PLAN SCALE: 1"=40'
PROFILE SCALE:
HORIZ:
VERT:

CONTRACT NO: 17-XX
DESIGNED: N. DONNELLY
DRAWN: E. ESPINOZA
CHECKED:
RECORD DRAWING: DATE:

DOKKEN ENGINEERING
110 BLUE RAVINE ROAD #200
FOLSOM, CA 95630
PHONE: (916) 858-0642
FAX: (916) 985-1845

CITY OF YUBA CITY

5TH STREET BRIDGE REPLACEMENT

STAGE 5 TRAFFIC HANDLING PLAN

SHEET NO.

OF 215

REVISION #	DATE:	DESCRIPTION AND SHEET NO.:	APPROVED BY:	DATE:

REGISTERED PROFESSIONAL ENGINEER
NATHAN J. DONNELLY
No. 64459
Exp. 6/30/17
CIVIL
STATE OF CALIFORNIA

PLAN SCALE: 1"=40'
PROFILE SCALE:
HORIZ:
VERT:

CONTRACT NO: **17-XX**
DESIGNED: N. DONNELLY
DRAWN: E. ESPINOZA
CHECKED:
RECORD DRAWING: DATE:

DOKKEN ENGINEERING
110 BLUE RAVINE ROAD #200
FOLSOM, CA 95630
PHONE: (916) 858-0642
FAX: (916) 858-0643

CITY OF **YUBA CITY**

5TH STREET BRIDGE REPLACEMENT
STAGE 5 TRAFFIC HANDLING PLAN

SHEET NO.
OF
215

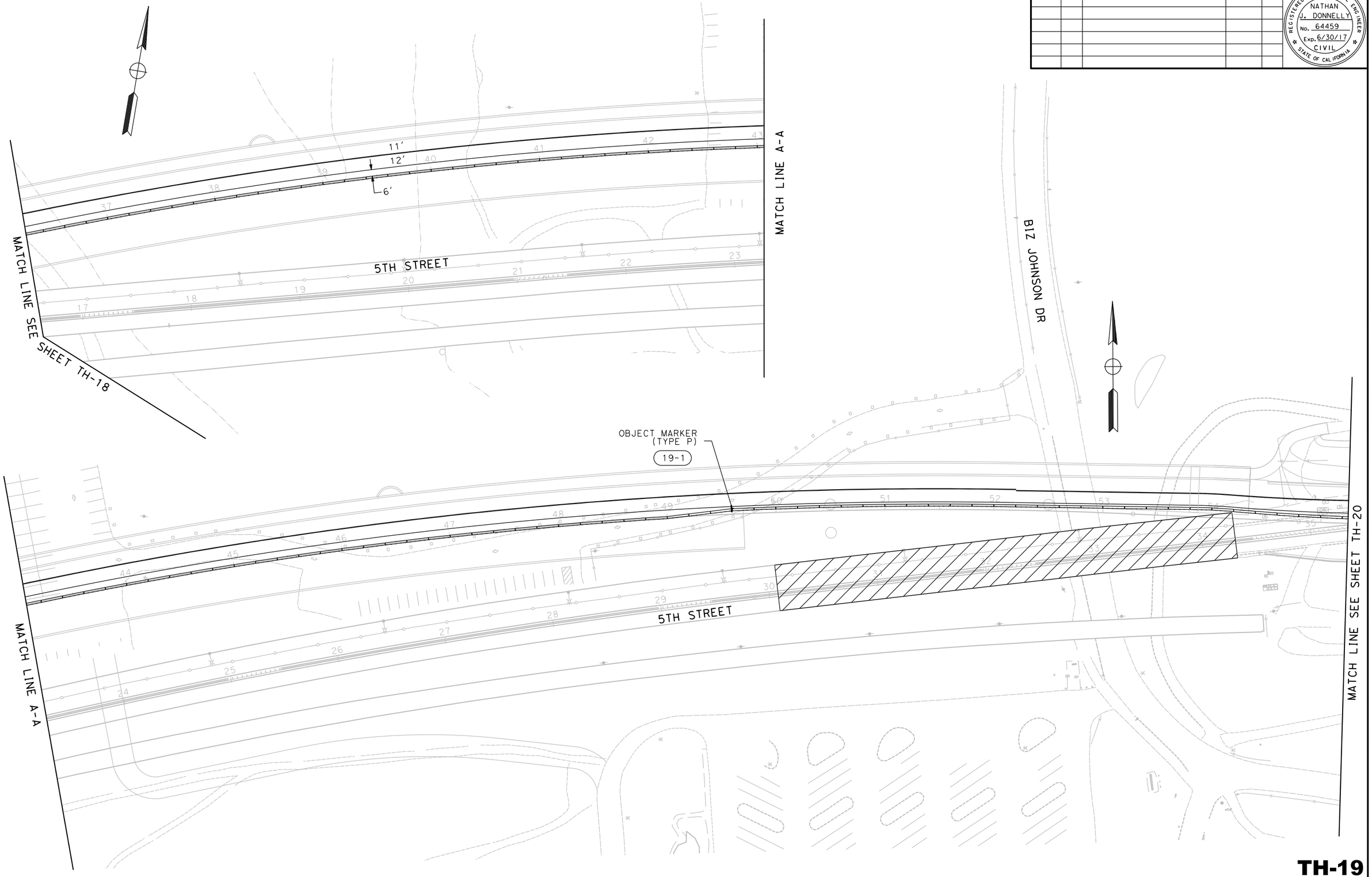

TH-19

FOR REDUCED PLANS
ORIGINAL SCALE IS IN INCHES
0 1 2 3
ALL DIMENSIONS SHOWN IN FEET
UNLESS OTHERWISE NOTED

8/15/2016
...\511\1858md019.dgn

REVISION #	DATE:	DESCRIPTION AND SHEET NO.:	APPROVED BY:	DATE:

REGISTERED PROFESSIONAL ENGINEER
NATHAN J. DONNELLY
No. 64459
Exp. 6/30/17
CIVIL
STATE OF CALIFORNIA

PCMS 20-3

+44
+16
+67
+80
+86
+88
+82
+85
+36
+52
+53
+65

22
38
27B
29
9

J STREET
I STREET
5TH STREET
"F" LINE
"J" LINE
4th STREET
UPRR

ARRAY 'TB14'
OBJECT MARKER (TYPE P) 20-5

PCMS 20-4

R11-2 20-1

PORTABLE DELINEATORS AT 5' SPACING

PCMS 20-2

MATCH LINE SHEET TH-19

FOR REDUCED PLANS
ORIGINAL SCALE IS IN INCHES
0 1 2 3

ALL DIMENSIONS SHOWN IN FEET
UNLESS OTHERWISE NOTED

TH-20

PLAN SCALE: 1"=40'
PROFILE SCALE:
HORIZ:
VERT:

CONTRACT NO: **17-XX**
DESIGNED: N. DONNELLY
DRAWN: E. ESPINOZA
CHECKED:
RECORD DRAWING: DATE:

DOKKEN ENGINEERING
110 BLUE RAVINE ROAD #200
FOLSOM, CA 95630
PHONE: (916) 858-0642
FAX: (916) 985-1845

CITY OF **YUBA CITY**

5TH STREET BRIDGE REPLACEMENT
STAGE 5
TRAFFIC HANDLING PLAN

SHEET NO.
OF
215

8/15/2016
...\511\1858md020.dgn

REVISION #	DATE:	DESCRIPTION AND SHEET NO.:	APPROVED BY:	DATE:

REGISTERED PROFESSIONAL ENGINEER
NATHAN J. DONNELLY
No. 64459
Exp. 6/30/17
CIVIL
STATE OF CALIFORNIA

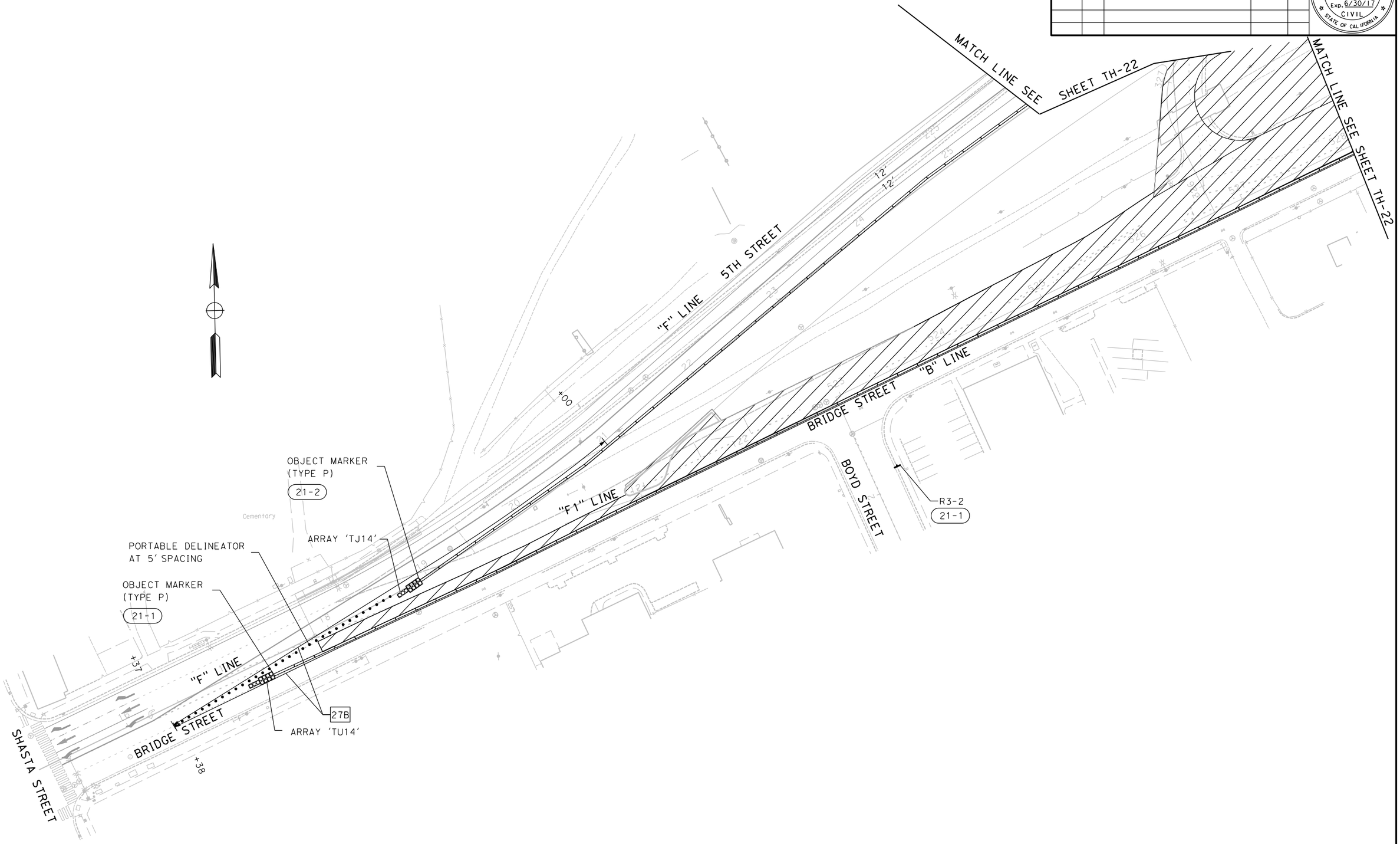

FOR REDUCED PLANS
ORIGINAL SCALE IS IN INCHES
0 1 2 3
ALL DIMENSIONS SHOWN IN FEET
UNLESS OTHERWISE NOTED

TH-21

PLAN SCALE: 1"=40'
PROFILE SCALE:
HORIZ:
VERT:

CONTRACT NO: **17-XX**
DESIGNED: N. DONNELLY
DRAWN: E. ESPINOZA
CHECKED:
RECORD DRAWING:
DATE:

DOKKEN ENGINEERING
110 BLUE RAVINE ROAD 1200
FOLSOM, CA 95630
PHONE: (916) 858-0642
FAX: (916) 858-0643

CITY OF **YUBA CITY**

5TH STREET BRIDGE REPLACEMENT
STAGE 6 TRAFFIC HANDLING PLAN

SHEET NO.
OF
215

8/15/2016
...\511\1858md021.dgn

REVISION #	DATE:	DESCRIPTION AND SHEET NO.:	APPROVED BY:	DATE:

REGISTERED PROFESSIONAL ENGINEER
NATHAN J. DONNELLY
No. 64459
Exp. 6/30/17
CIVIL
STATE OF CALIFORNIA

AYLOR AVENUE

SUTTER STREET

MATCH LINE SEE SHEET TH-23

ARRAY 'TU11'

OBJECT MARKER (TYPE P) 22-7

"E" LINE

5TH STREET

Ped BARRICADE WITH R9-9 22-8

"F4" LINE WB OFF-RAMP

R3-1 22-6

R3-2 22-5

OBJECT MARKER (TYPE P) 22-9

"S" LINE

SECOND STREET

"B" LINE

BRIDGE STREET

R3-2 22-4

Ped BARRICADE WITH R9-11a 22-4

Ped BARRICADE WITH R9-11a 22-3

R3-2 22-2

Ped BARRICADE WITH R9-11a 22-1

FAIRMAN STREET

MATCH LINE SEE SHEET TH-21

MATCH LINE SEE SHEET TH-21

FOR REDUCED PLANS ORIGINAL SCALE IS IN INCHES 0 1 2 3

ALL DIMENSIONS SHOWN IN FEET UNLESS OTHERWISE NOTED

TH-22

PLAN SCALE: 1"=40'
PROFILE SCALE:
HORIZ:
VERT:

CONTRACT NO: **17-XX**
DESIGNED: N. DONNELLY
DRAWN: E. ESPINOZA
CHECKED:
RECORD DRAWING: DATE:

DOKKEN ENGINEERING
110 BLUE RAVINE ROAD #200
FOLSOM, CA 95630
PHONE: (916) 858-0642
FAX: (916) 858-0643

CITY OF **YUBA CITY**

5TH STREET BRIDGE REPLACEMENT
STAGE 6 TRAFFIC HANDLING PLAN

SHEET NO.
OF
215

8/15/2016

...\511\858md022.dgn

REVISION #	DATE:	DESCRIPTION AND SHEET NO.:	APPROVED BY:	DATE:

REGISTERED PROFESSIONAL ENGINEER
NATHAN J. DONNELLY
No. 64459
Exp. 6/30/17
CIVIL
STATE OF CALIFORNIA

PLAN SCALE: 1"=40'
PROFILE SCALE:
HORIZ:
VERT:

CONTRACT NO: **17-XX**
DESIGNED: N. DONNELLY
DRAWN: E. ESPINOZA
CHECKED:
RECORD DRAWING: DATE:

DOKKEN ENGINEERING
110 BLUE RAVINE ROAD #200
FOLSOM, CA 95630
PHONE: (916) 858-0642
FAX: (916) 985-1845

CITY OF **YUBA CITY**

5TH STREET BRIDGE REPLACEMENT
STAGE 6 TRAFFIC HANDLING PLAN

SHEET NO.
OF
215

MATCH LINE SEE SHEET TH-22

5TH STREET

12'
12'

MATCH LINE A-A

B1Z JOHNSON DR

OBJECT MARKER (TYPE P)
23-1

MATCH LINE A-A

5TH STREET

MATCH LINE SEE SHEET TH-24

TH-23

FOR REDUCED PLANS
ORIGINAL SCALE IS IN INCHES
0 1 2 3
ALL DIMENSIONS SHOWN IN FEET
UNLESS OTHERWISE NOTED

8/15/2016

...\511\1858md023.dgn

REVISION #	DATE	DESCRIPTION AND SHEET NO.	APPROVED BY	DATE

REGISTERED PROFESSIONAL ENGINEER
NATHAN J. DONNELLY
No. 64459
Exp. 6/30/17
CIVIL
STATE OF CALIFORNIA

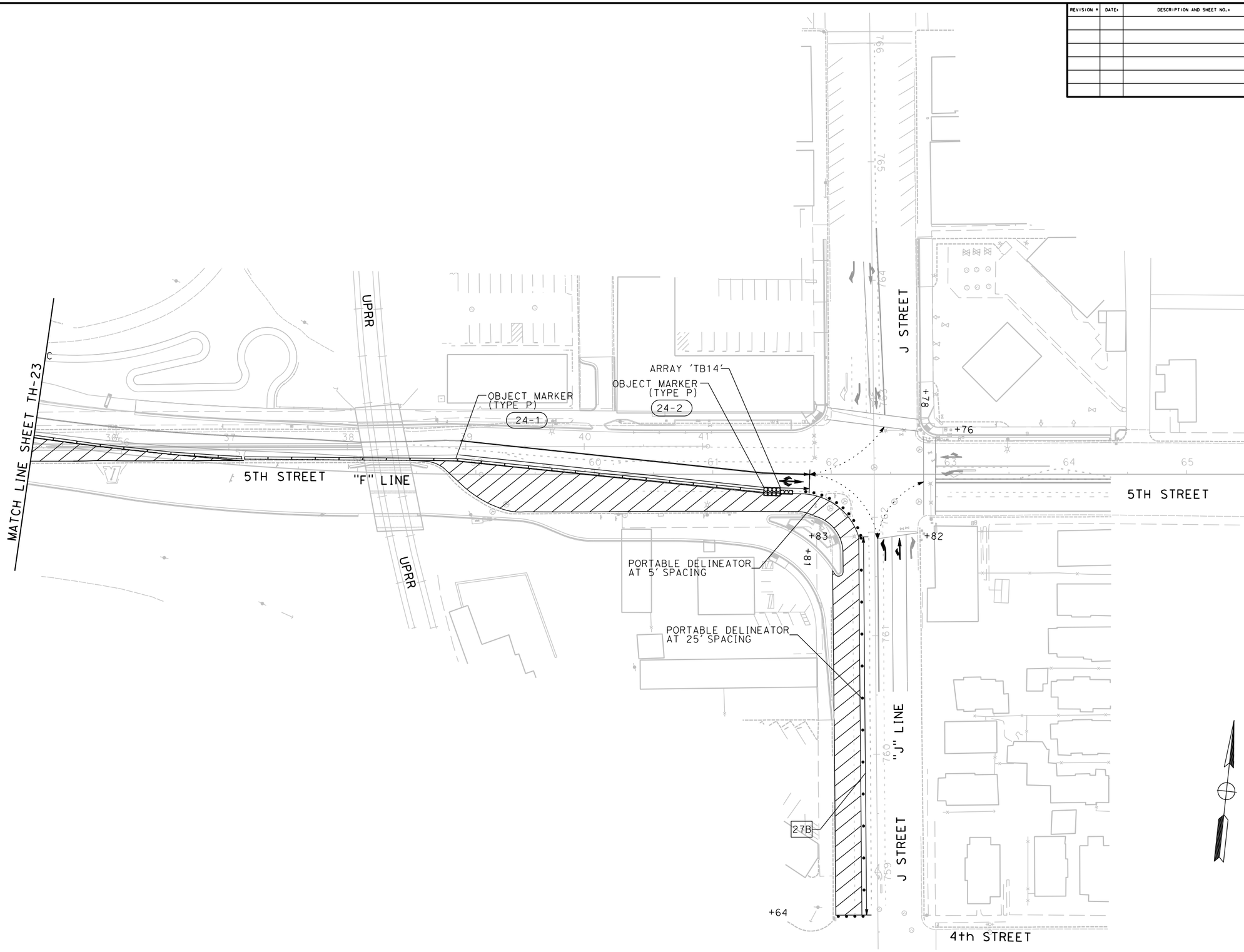

FOR REDUCED PLANS
ORIGINAL SCALE IS IN INCHES

0 1 2 3

ALL DIMENSIONS SHOWN IN FEET
UNLESS OTHERWISE NOTED

TH-24

PLAN SCALE: 1"=40'
PROFILE SCALE:
HORIZ:
VERT:

CONTRACT NO: **17-XX**
DESIGNED: N. DONNELLY
DRAWN: E. ESPINOZA
CHECKED:
RECORD DRAWING: DATE:

DOKKEN ENGINEERING
110 BLUE RAVINE ROAD #200
FOLSOM, CA 95630
PHONE: (916) 858-0642
FAX: (916) 985-1845

CITY OF **YUBA CITY**

5TH STREET BRIDGE REPLACEMENT
STAGE 6
TRAFFIC HANDLING PLAN

SHEET NO.
OF
215

8/15/2016
...\511\1858md024.dgn

REVISION #	DATE:	DESCRIPTION AND SHEET NO.:	APPROVED BY:	DATE:

REGISTERED PROFESSIONAL ENGINEER
NATHAN J. DONNELLY
No. 64459
Exp. 6/30/17
CIVIL
STATE OF CALIFORNIA

NOTES:

1. DRIVEWAYS ON SOUTH SIDE OF BRIDGE STREET TO BE ACCESSIBLE AT ALL TIMES.
2. MAINTAIN ACCESS TO BUSINESSES AT ALL TIMES.

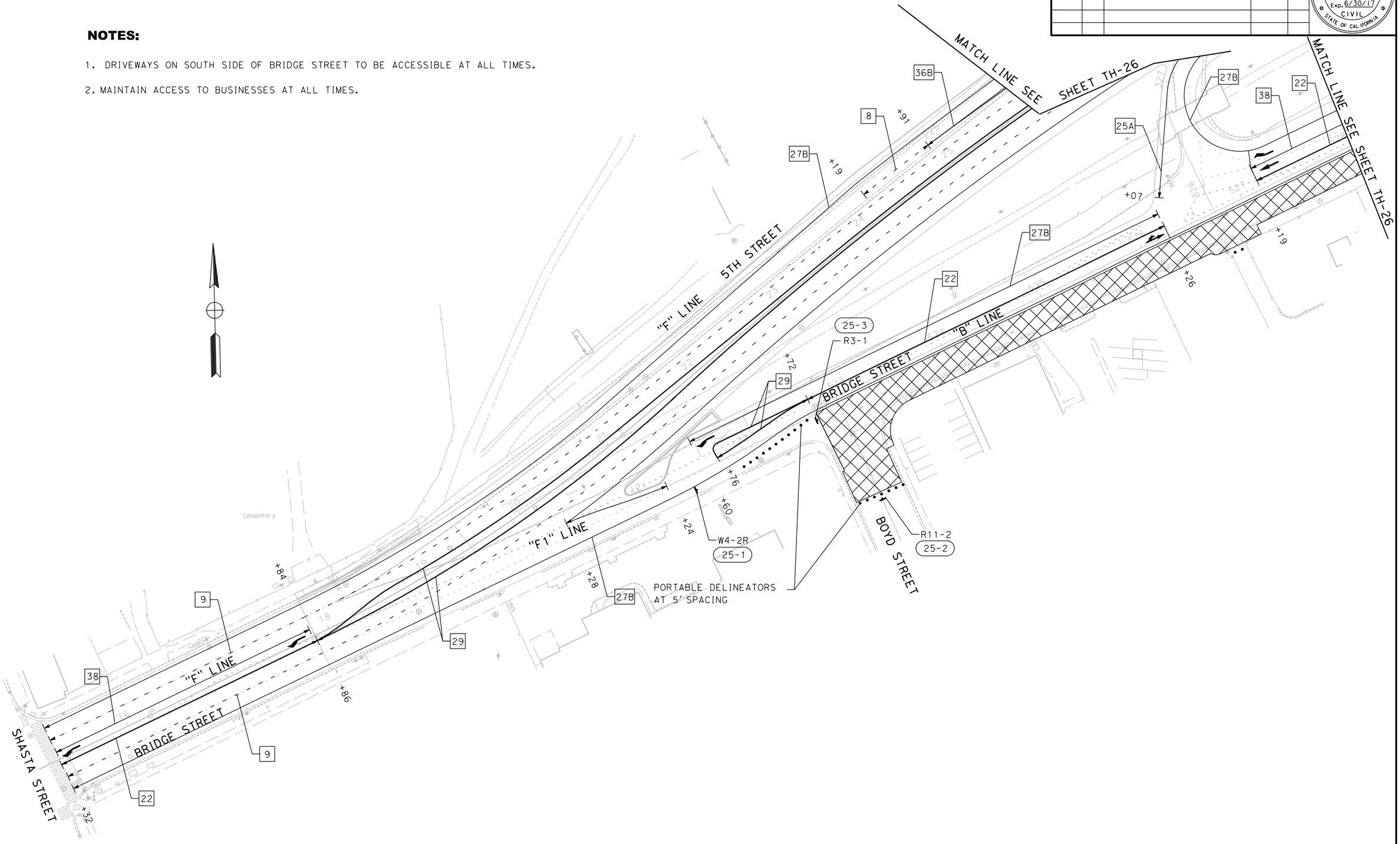

FOR REDUCED PLANS
ORIGINAL SCALE IS IN INCHES

0 1 2 3

ALL DIMENSIONS SHOWN IN FEET
UNLESS OTHERWISE NOTED

TH-25

PLAN SCALE: 1"=40'
PROFILE SCALE:
HORIZ:
VERT:

CONTRACT NO: **17-XX**
DESIGNED: N. DONNELLY
DRAWN: E. ESPINOZA
CHECKED:
RECORD DRAWINGS: DATE:

DOKKEN ENGINEERING
110 BLUE RAVINE ROAD 1200
FOLSOM, CA 95630
PHONE: (916) 858-0642
FAX: (916) 858-0643

CITY OF **YUBA CITY**

5TH STREET BRIDGE REPLACEMENT
STAGE 7
TRAFFIC HANDLING PLAN

SHEET NO.
OF
215

8/15/2016

...\511\1858md025.dgn

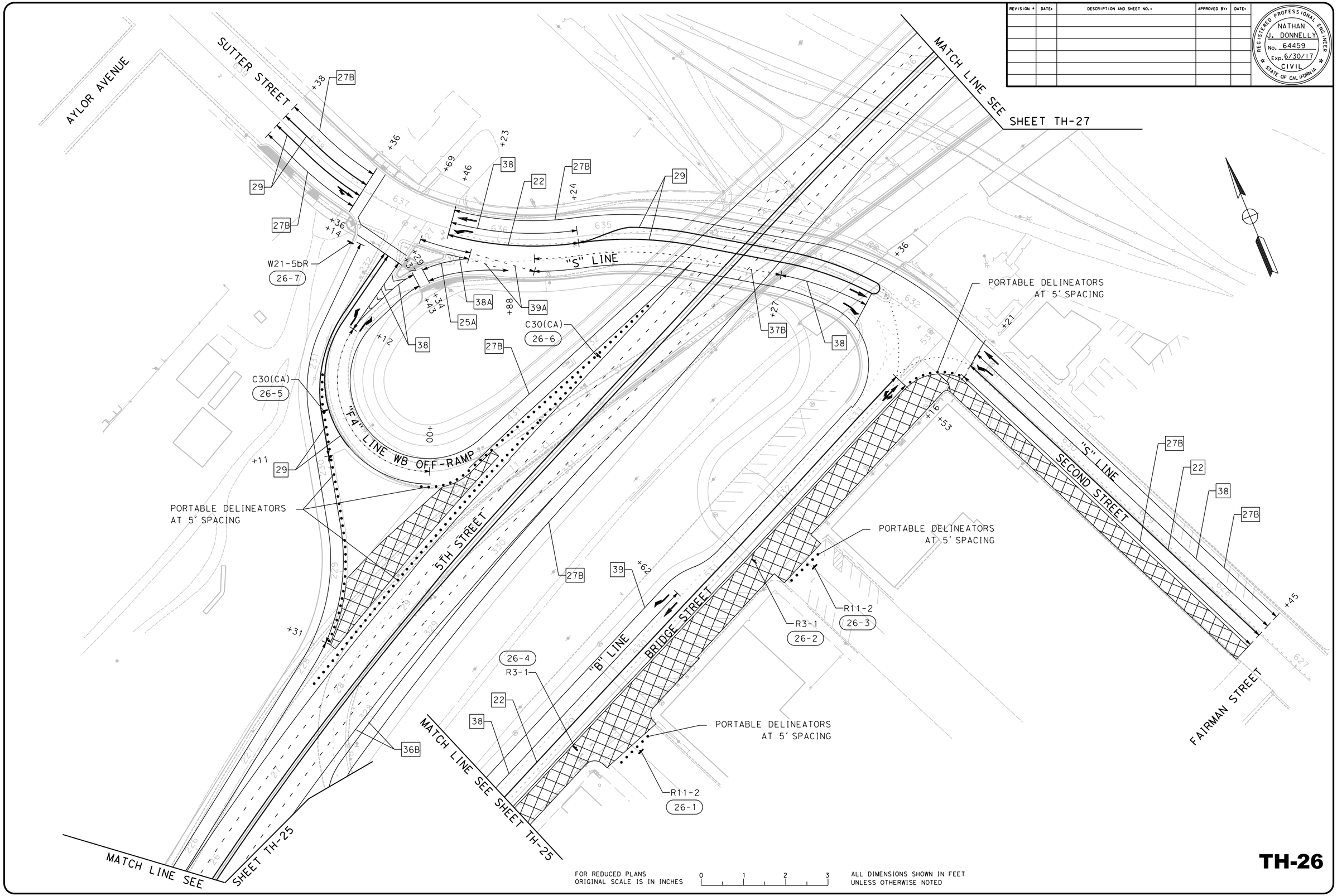

REVISION #	DATE:	DESCRIPTION AND SHEET NO.:	APPROVED BY:	DATE:

REGISTERED PROFESSIONAL ENGINEER
NATHAN J. DONNELLY
No. 64459
Exp. 6/30/17
CIVIL
STATE OF CALIFORNIA

PLAN SCALE: 1"=40'
PROFILE SCALE:
HORIZ:
VERT:

CONTRACT NO: 17-XX
DESIGNED: N. DONNELLY
DRAWN: E. ESPINOZA
CHECKED:
RECORD DRAWING:
DATE:

DOKKEN ENGINEERING
110 BLUE RAVINE ROAD #200
FOLSOM, CA 95630
PHONE: (916) 858-0642
FAX: (916) 858-0643

CITY OF YUBA CITY

5TH STREET BRIDGE REPLACEMENT
STAGE 7
TRAFFIC HANDLING PLAN

SHEET NO. OF 215

TH-26

FOR REDUCED PLANS ORIGINAL SCALE IS IN INCHES 0 1 2 3
ALL DIMENSIONS SHOWN IN FEET UNLESS OTHERWISE NOTED

8/15/2016
...\511\1858md026.dgn

REVISION #	DATE:	DESCRIPTION AND SHEET NO.:	APPROVED BY:	DATE:

REGISTERED PROFESSIONAL ENGINEER
NATHAN J. DONNELLY
No. 64459
Exp. 6/30/17
CIVIL
STATE OF CALIFORNIA

PLAN SCALE: 1"=40'
PROFILE SCALE:
HORIZ:
VERT:

CONTRACT NO: **17-XX**
DESIGNED: N. DONNELLY
DRAWN: E. ESPINOZA
CHECKED:
RECORD DRAWING: DATE:

DOKKEN ENGINEERING
110 BLUE RAVINE ROAD #200
FOLSOM, CA 95630
PHONE: (916) 858-0642
FAX: (916) 858-0643

CITY OF **YUBA CITY**

5TH STREET BRIDGE REPLACEMENT
STAGE 7
TRAFFIC HANDLING PLAN

SHEET NO.
OF
215

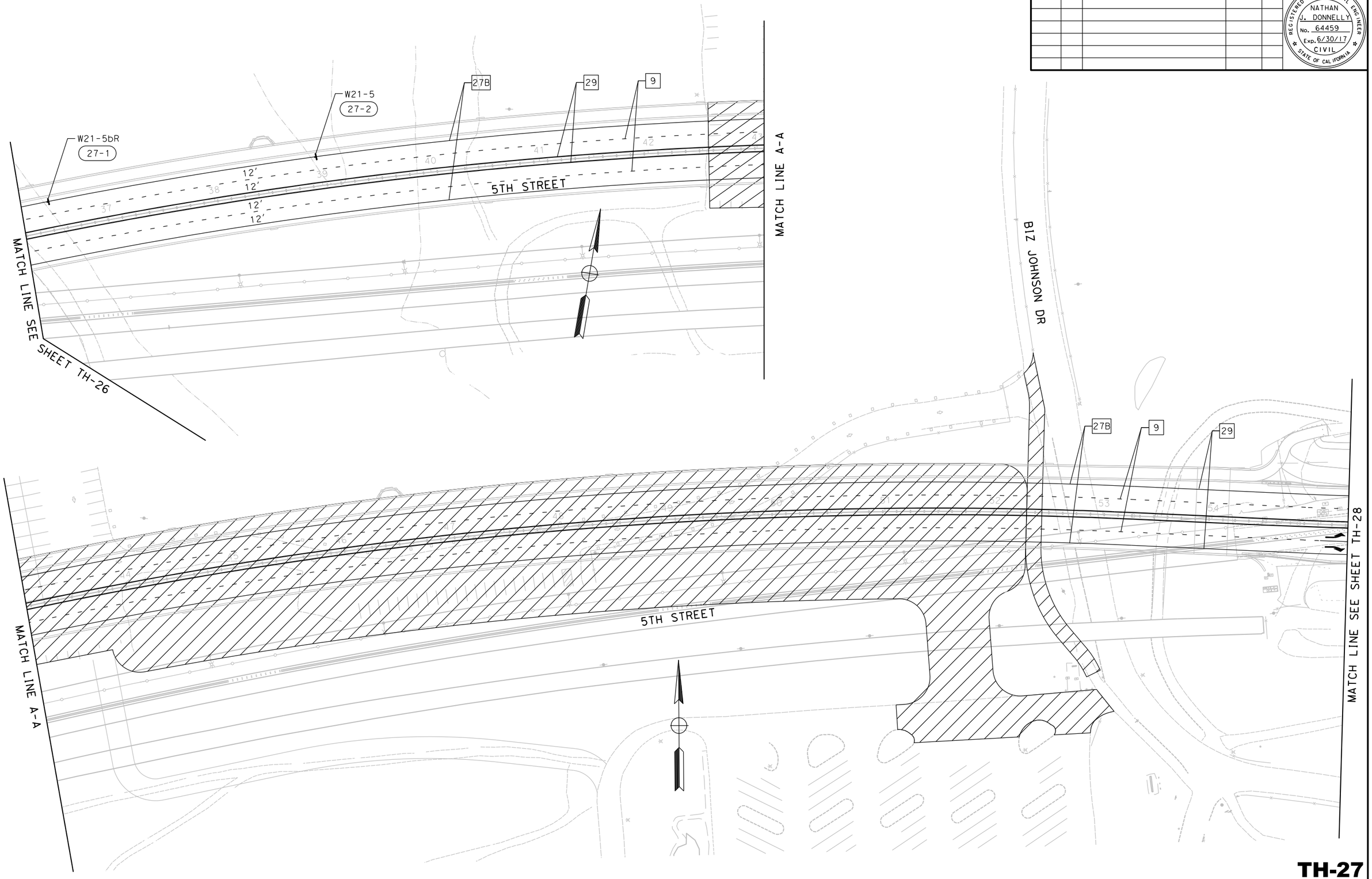

FOR REDUCED PLANS
ORIGINAL SCALE IS IN INCHES

0 1 2 3

ALL DIMENSIONS SHOWN IN FEET
UNLESS OTHERWISE NOTED

TH-27

8/15/2016

...\511\1858md027.dgn

REVISION #	DATE:	DESCRIPTION AND SHEET NO.:	APPROVED BY:	DATE:

REGISTERED PROFESSIONAL ENGINEER
NATHAN J. DONNELLY
No. 64459
Exp. 6/30/17
CIVIL
STATE OF CALIFORNIA

PLAN SCALE: 1"=40'
PROFILE SCALE:
HORIZ:
VERT:

CONTRACT NO: **17-XX**
DESIGNED: N. DONNELLY
DRAWN: E. ESPINOZA
CHECKED:
RECORD DRAWING: DATE:

DOKKEN ENGINEERING
110 BLUE RAVINE ROAD #200
FOLSOM, CA 95630
PHONE: (916) 858-0642
FAX: (916) 985-1845

CITY OF **YUBA CITY**

5TH STREET BRIDGE REPLACEMENT
STAGE 7
TRAFFIC HANDLING PLAN

SHEET NO.
OF
215

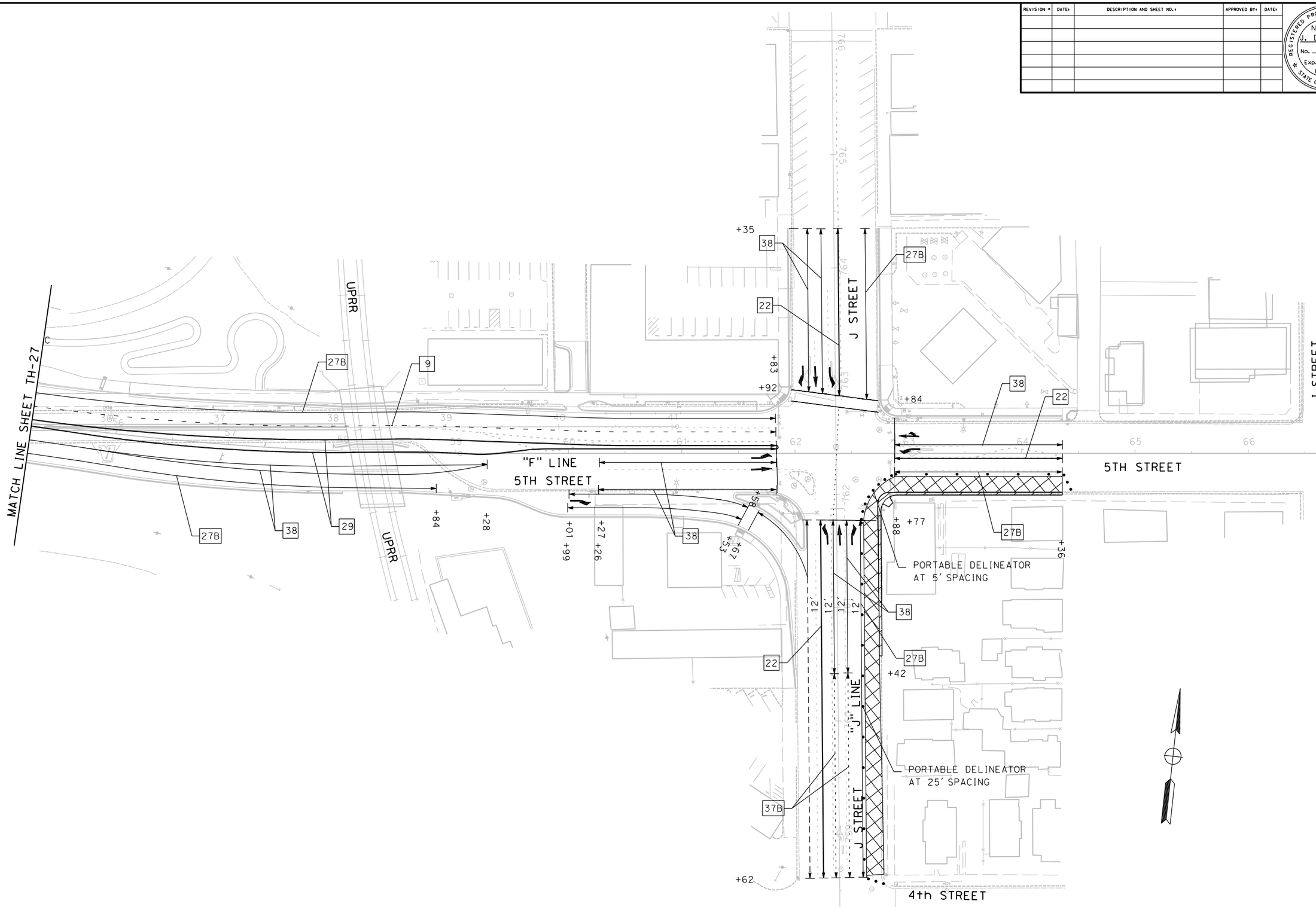

FOR REDUCED PLANS
ORIGINAL SCALE IS IN INCHES
0 1 2 3
ALL DIMENSIONS SHOWN IN FEET
UNLESS OTHERWISE NOTED

TH-28

8/15/2016
...\511\1858md028.dgn

REVISION #	DATE:	DESCRIPTION AND SHEET NO.:	APPROVED BY:	DATE:

REGISTERED PROFESSIONAL ENGINEER
NATHAN J. DONNELLY
No. 64459
Exp. 6/30/17
CIVIL
STATE OF CALIFORNIA

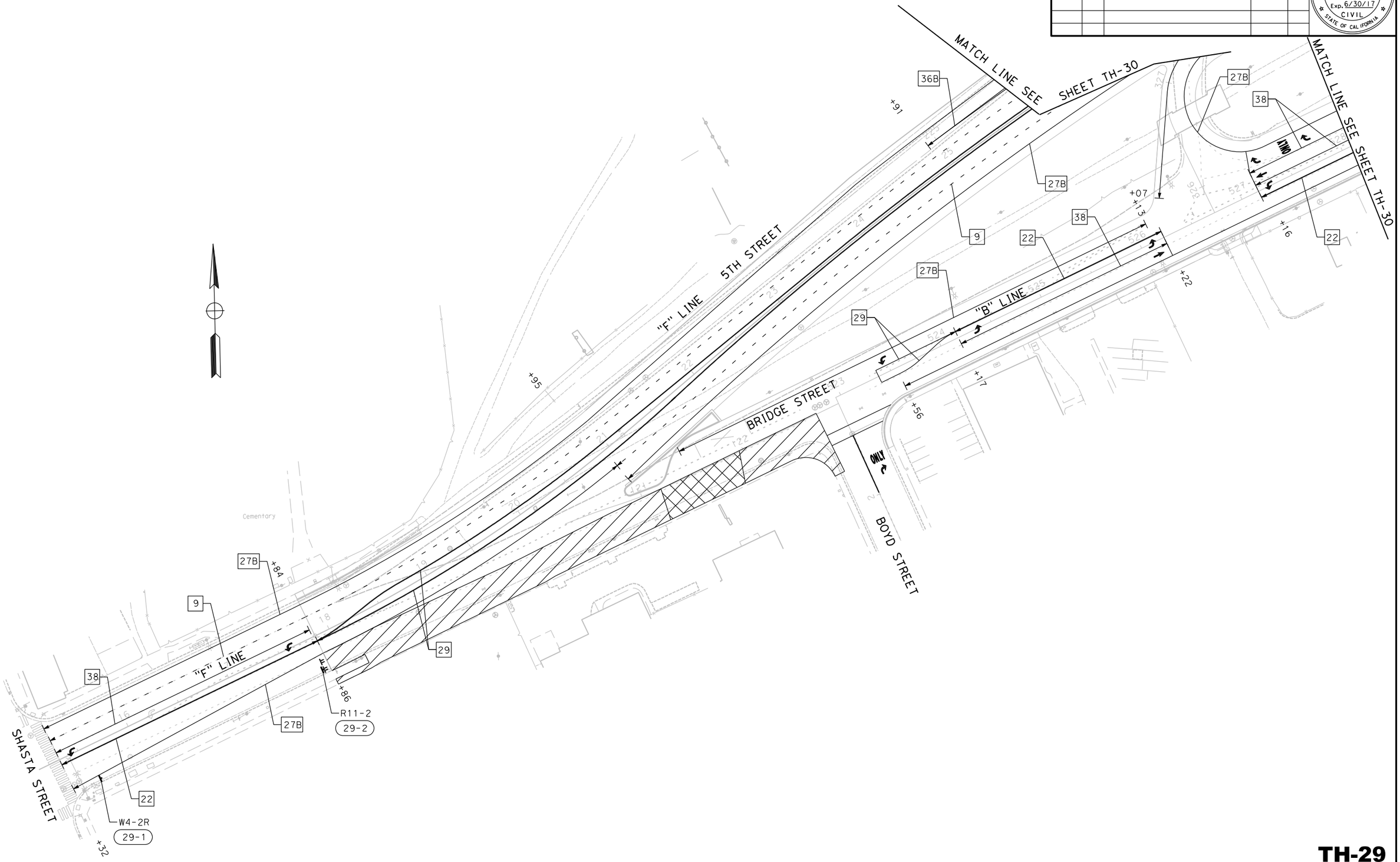

FOR REDUCED PLANS
ORIGINAL SCALE IS IN INCHES

0 1 2 3

ALL DIMENSIONS SHOWN IN FEET
UNLESS OTHERWISE NOTED

TH-29

PLAN SCALE: 1"=40'
PROFILE SCALE:
HORIZ:
VERT:

CONTRACT NO: 17-XX
DESIGNED: N. DONNELLY
DRAWN: E. ESPINOZA
CHECKED:
RECORD DRAWING:
DATE:

DOKKEN ENGINEERING
110 BLUE RAVINE ROAD 7200
FOLSOM, CA 95630
PHONE: (916) 858-0642
FAX: (916) 858-0643

CITY OF YUBA CITY

5TH STREET BRIDGE REPLACEMENT
STAGE 8
TRAFFIC HANDLING PLAN

SHEET NO.
OF
215

8/15/2016

...\511\1858md029.dgn

REVISION #	DATE:	DESCRIPTION AND SHEET NO.:	APPROVED BY:	DATE:

REGISTERED PROFESSIONAL ENGINEER
NATHAN J. DONNELLY
No. 64459
Exp. 6/30/17
CIVIL
STATE OF CALIFORNIA

AYLOR AVENUE

SUTTER STREET

PORTABLE DELINEATOR AT 5' SPACING

SEE NOTE 1

PORTABLE DELINEATOR AT 5' SPACING

MATCH LINE SEE SHEET TH-31

"S" LINE

"F4" LINE WB OFF-RAMP

5TH STREET

"B" LINE

BRIDGE STREET

"S" LINE

SECOND STREET

FAIRMAN STREET

MATCH LINE SEE SHEET TH-29

MATCH LINE SEE SHEET TH-25

NOTE:

1. THROUGH TRAFFIC ON SUTTER STREET TO MANTAINED WITH THE USE OF FLAGGERS AND ALTERNATING DIRECTION TRAFFIC CONTROL.

FOR REDUCED PLANS ORIGINAL SCALE IS IN INCHES 0 1 2 3

ALL DIMENSIONS SHOWN IN FEET UNLESS OTHERWISE NOTED

TH-30

8/15/2016

...\511\1858md030.dgn

PLAN SCALE: 1"=40'
PROFILE SCALE:
HORIZ:
VERT:

CONTRACT NO: **17-XX**
DESIGNED: N. DONNELLY
DRAWN: E. ESPINOZA
CHECKED:
RECORD DRAWING:
DATE:

DOKKEN ENGINEERING
110 BLUE RAVINE ROAD #200
FOLSOM, CA 95630
PHONE: (916) 858-0642
FAX: (916) 985-1845

CITY OF **YUBA CITY**

5TH STREET BRIDGE REPLACEMENT
STAGE 8
TRAFFIC HANDLING PLAN

SHEET NO.
OF
215

REVISION #	DATE:	DESCRIPTION AND SHEET NO.:	APPROVED BY:	DATE:

REGISTERED PROFESSIONAL ENGINEER
NATHAN J. DONNELLY
No. 64459
Exp. 6/30/17
CIVIL
STATE OF CALIFORNIA

PLAN SCALE: 1"=40'
PROFILE SCALE:
HORIZ:
VERT:

CONTRACT NO: **17-XX**
DESIGNED: N. DONNELLY
DRAWN: E. ESPINOZA
CHECKED:
RECORD DRAWING: DATE:

DOKKEN ENGINEERING
110 BLUE RAVINE ROAD #200
FOLSOM, CA 95630
PHONE: (916) 858-0642
FAX: (916) 858-0643

CITY OF **YUBA CITY**

5TH STREET BRIDGE REPLACEMENT
STAGE 8 TRAFFIC HANDLING PLAN

SHEET NO.
OF
215

MATCH LINE SEE SHEET TH-30

5TH STREET

MATCH LINE A-A

B1Z JOHNSON DR

MATCH LINE A-A

5TH STREET

MATCH LINE SEE SHEET TH-32

TH-31

FOR REDUCED PLANS
ORIGINAL SCALE IS IN INCHES
0 1 2 3
ALL DIMENSIONS SHOWN IN FEET
UNLESS OTHERWISE NOTED

8/15/2016

...\511\1858md031.dgn

REVISION #	DATE:	DESCRIPTION AND SHEET NO.:	APPROVED BY:	DATE:

REGISTERED PROFESSIONAL ENGINEER
NATHAN J. DONNELLY
No. 64459
Exp. 6/30/17
CIVIL
STATE OF CALIFORNIA

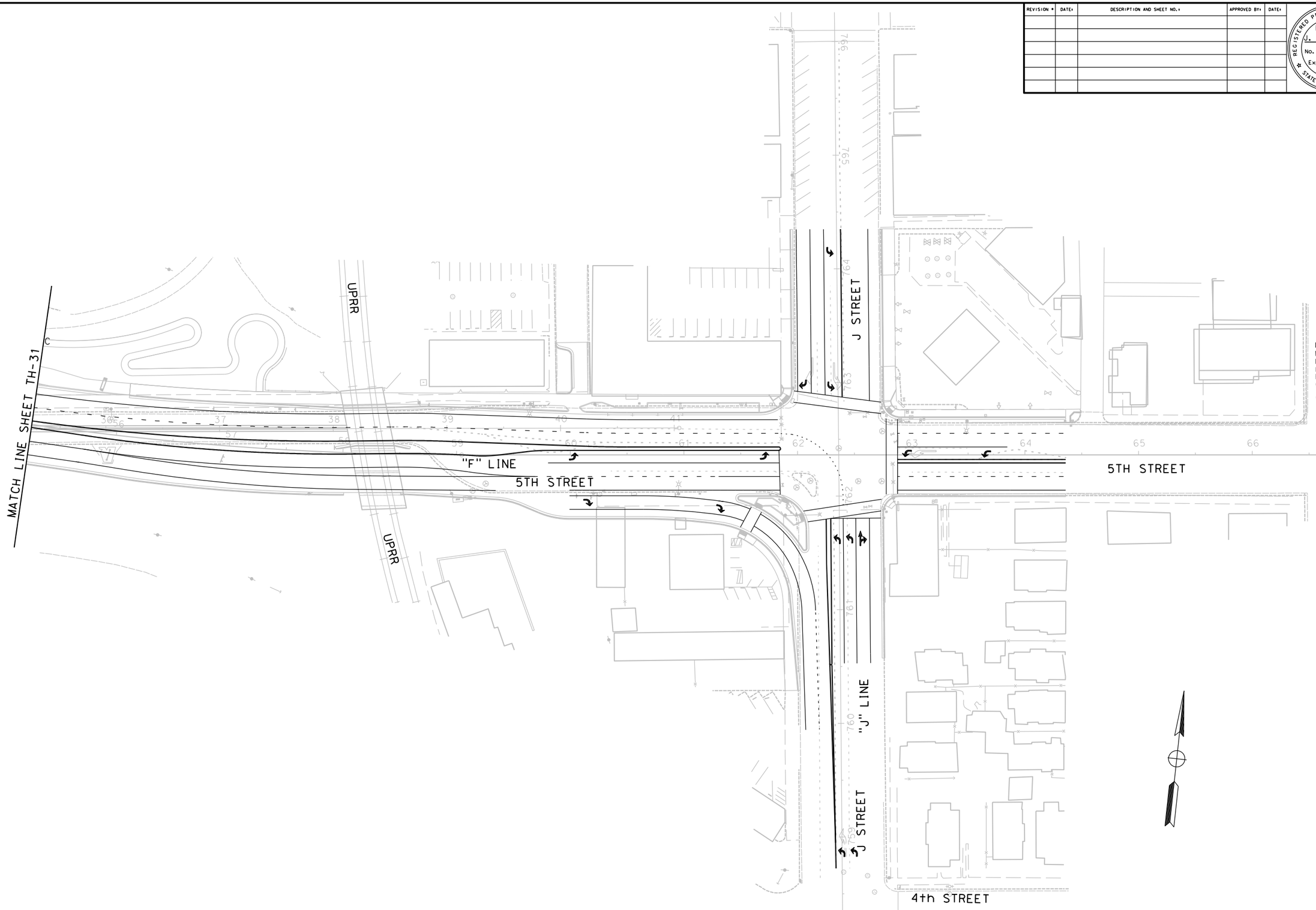

FOR REDUCED PLANS
ORIGINAL SCALE IS IN INCHES

0 1 2 3

ALL DIMENSIONS SHOWN IN FEET
UNLESS OTHERWISE NOTED

TH-32

PLAN SCALE: 1"=40'
PROFILE SCALE:
HORIZ:
VERT:

CONTRACT NO: **17-XX**
DESIGNED: N. DONNELLY
DRAWN: E. ESPINOZA
CHECKED:
RECORD DRAWING: DATE:

DOKKEN ENGINEERING
110 BLUE RAVINE ROAD #200
FOLSOM, CA 95630
PHONE: (916) 858-0642
FAX: (916) 858-0643

CITY OF
YUBA CITY

5TH STREET BRIDGE REPLACEMENT
STAGE 8
TRAFFIC HANDLING PLAN

SHEET NO.
OF
215

8/15/2016
...\511\1858md032.dgn

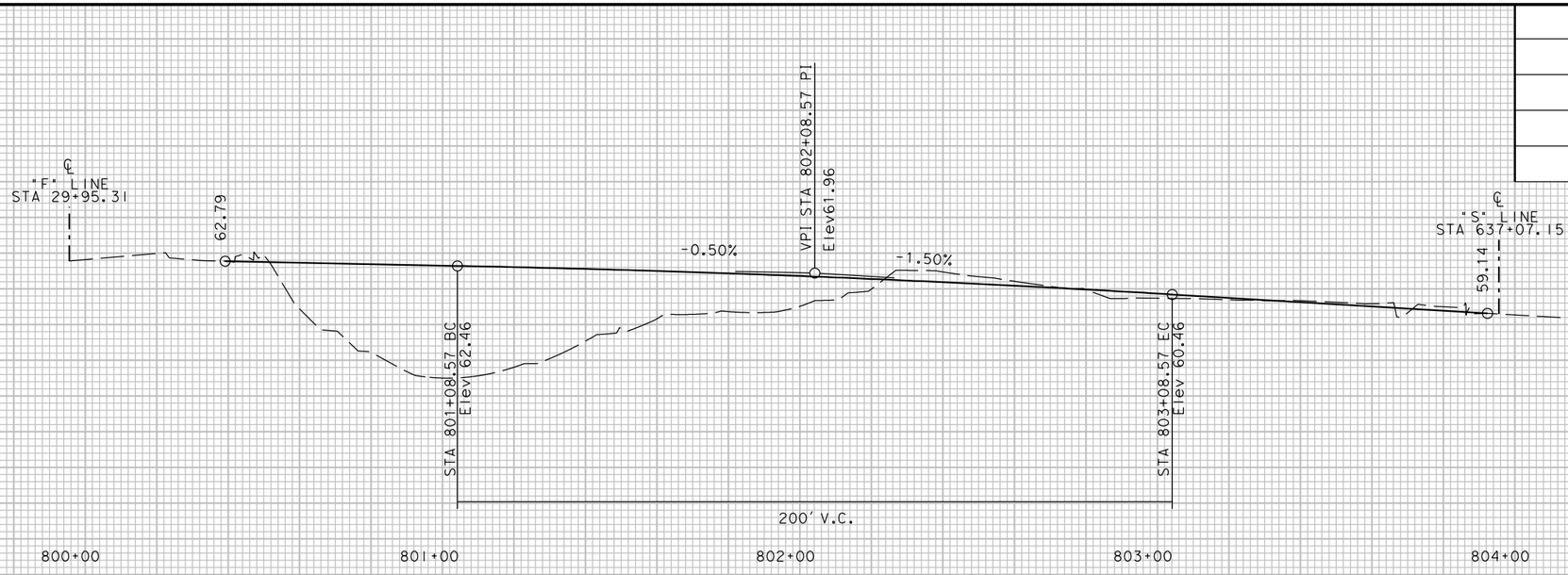

PROFILE
HORIZ: 1"= 20'
VERT: 1"= 5'

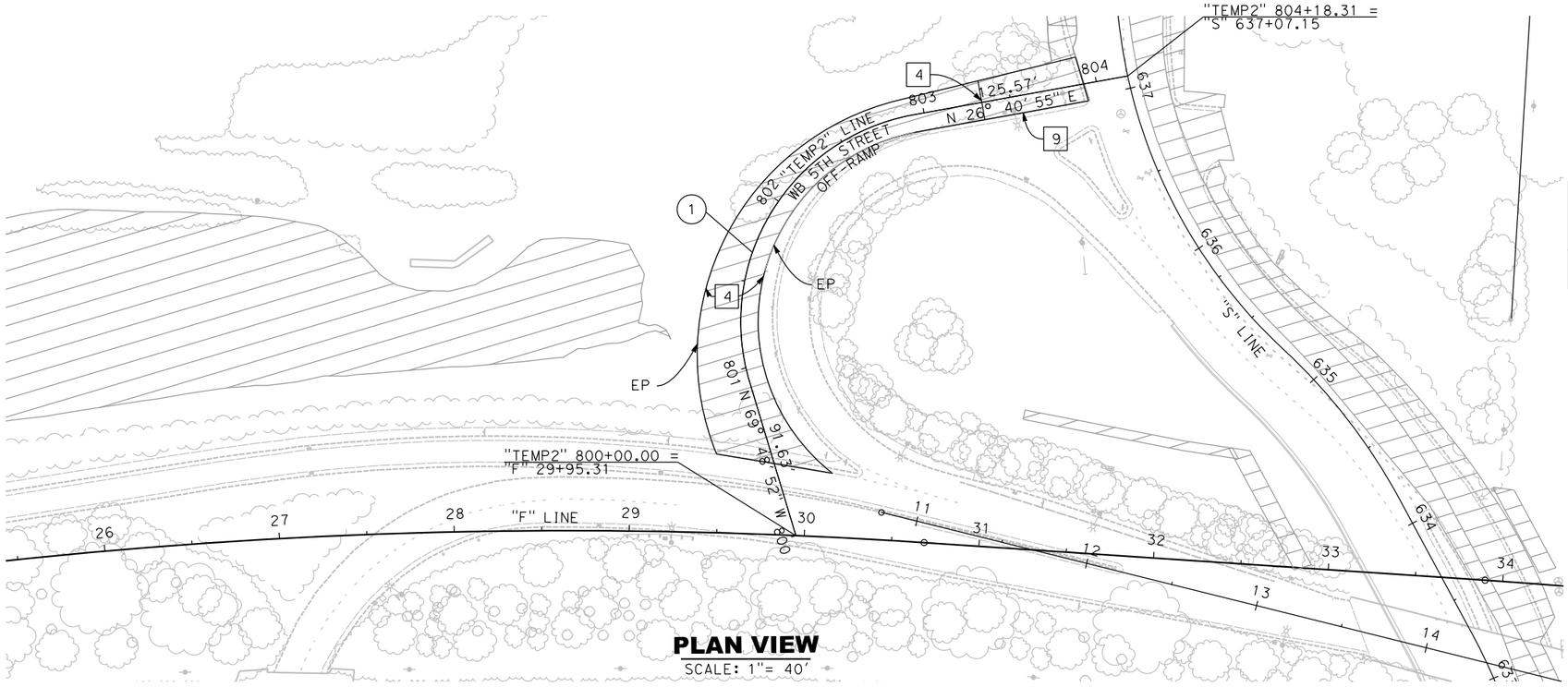

PLAN VIEW
SCALE: 1"= 40'

CURVE DATA				
No	RADIUS (ft)	DELTA	TANGENT (ft)	LENGTH (ft)
1	120.00	96°01'32"	133.33	201.12

5TH STREET "TEMP2" LINE

THD-1

FOR REDUCED PLANS
ORIGINAL SCALE IS IN INCHES
0 1 2 3
ALL DIMENSIONS SHOWN IN FEET
UNLESS OTHERWISE NOTED

REVISION #	DATE:	DESCRIPTION AND SHEET NO.:	APPROVED BY:	DATE:

REGISTERED PROFESSIONAL ENGINEER
MEGAN R. CARTER
No. 75885
Exp. 6/30/18
CIVIL
STATE OF CALIFORNIA

PLAN SCALE: 1"=40'
PROFILE SCALE: 1"=40'
HORIZ: 1"=10'
VERT:

CONTRACT NO: 17-XX
DESIGNED: M. CARTER
DRAWN: A. LEE
CHECKED:
RECORD DRAWING:
DATE:

DOKKEN ENGINEERING
110 BLUE RAVINE ROAD 1200
FOLSOM, CA 95630
PHONE: (916) 858-0642
FAX: (916) 985-1845

CITY OF YUBA CITY

5TH STREET BRIDGE REPLACEMENT
WB 5TH STREET OFF-RAMP

SHEET NO.
OF 215

8/15/2016
...\51\1858me001.dgn

REVISION #	DATE:	DESCRIPTION AND SHEET NO.:	APPROVED BY:	DATE:

REGISTERED PROFESSIONAL ENGINEER
No. _____
Exp. _____
CIVIL
STATE OF CALIFORNIA

PLAN SCALE: 1"=40'
PROFILE SCALE:
HORIZ:
VERT:

CONTRACT NO: 17-XX
DESIGNED:
DRAWN:
CHECKED:
RECORD DRAWING:
DATE:

DOKKEN ENGINEERING
110 BLUE RAVINE ROAD #200
FOLSOM, CA 95630
PHONE: (916) 858-0642
FAX: (916) 858-0643

CITY OF YUBA CITY

5TH STREET BRIDGE REPLACEMENT
TRAFFIC HANDLING PLAN QUANTITIES

SHEET NO.
OF
215

TEMPORARY TRAFFIC HANDLING QUANTITIES

CONSTRUCTION STAGE	SHEET NUMBER	TEMPORARY RAILING (TYPE K)	CRASH CUSHION (ARRAY 'TB11') MODULES	CRASH CUSHION (ARRAY 'TU14') MODULES	CRASH CUSHION (ARRAY 'TS11') MODULES	CRASH CUSHION (ARRAY 'TU11') MODULES	CRASH CUSHION (ARRAY 'TB14') MODULES	CRASH CUSHION (ARRAY 'TJ14') MODULES	TACC	PORTABLE DELINEATORS	TEMPORARY TRAFFIC STRIPE (PAINT)	TEMPORARY PAVEMENT MARKING	BARRICADE (TYPE III)	PEDESTRIAN BARRICADE (TYPE A)	TEMPORARY TRAFFIC MARKERS	TEMPORARY DELINEATORS (SURFACE MOUNTED)	PCMS
		LF	EA	EA	EA	EA	EA	EA	EA	EA	LF	SQFT	EA	EA	EA	EA	EA
1	TH-1	-	-	-	-	-	-	-	-	8	1,636	-	6	-	-	-	2
	TH-2	-	-	-	-	-	-	-	-	74	1,179	249	23	4	-	-	2
	TH-3	-	-	-	-	-	-	-	-	53	1,761	-	6	-	-	-	-
	TH-4	-	-	-	-	-	-	-	-	34	1,349	354	3	-	-	-	3
2	TH-5	-	-	-	-	-	-	-	-	-	1,415	146	-	-	-	-	-
	TH-6	1063	22	14	-	-	-	-	-	-	3,461	930	-	-	107	22	2
	TH-7	260	-	-	22	-	-	-	1	41	104	-	4	2	15	16	-
	TH-8	556	-	-	-	11	-	-	-	28	3,327	558	-	6	210	72	-
3	TH-9	-	-	-	-	-	-	-	-	-	-	-	-	-	-	-	-
	TH-10	539	-	-	-	-	-	-	1	41	4,808	219	-	2	183	-	2
	TH-11	-	-	-	-	-	-	-	-	-	412		-	-	20	-	-
	TH-12	629	11	-	-	-	-	-	1	28	6,001	613	6	3	236	32	2
4	TH-13	960	11	-	-	-	-	-	1	14	2,993	230	-	1	103	-	-
	TH-14	1512	-	-	-	-	-	-	-	6	2,478	-	-	-	77	-	2
	TH-15	1905	-	-	-	-	-	-	-	-	3,920	-	-	-	170	-	-
	TH-16	405	-	-	-	-	14	-	-	33	4,962	719	-	2	299	-	1
5	TH-17	494	-	-	-	-	14	-	-	80	5,546	684	6	-	206	-	1
	TH-18	1044	-	-	-	-	-	-	-	78	5,582	938	16	5	177	-	2
	TH-19	-	-	-	-	-	-	-	-	-	-	-	-	-	-	-	-
	TH-20	622	-	-	-	-	14	-	-	7	3,287	354	6	-	187	-	3
6	TH-21	1765	-	14	-	-	-	14	-	33	1,637	-	-	-	-	-	-
	TH-22	2031	-	-	-	11	-	-	-	-	4,462	309	-	4	131	-	-
	TH-23	1906	-	-	-	-	-	-	-	-	-	-	-	-	-	-	-
	TH-24	619	-	-	-	-	14	-	-	22	320	146	-	-	-	-	-
7	TH-25	-	-	-	-	-	-	-	-	18	8,696	202	-	-	288	-	-
	TH-26	-	-	-	-	-	-	-	-	141	6,964	480	-	-	261	-	-
	TH-27	-	-	-	-	-	-	-	-	-	11,439	84	-	-	400	-	-
	TH-28	-	-	-	-	-	-	-	-	29	5,602	681	-	-	259	-	-
8	TH-29	-	-	-	-	-	-	-	-	-	5,867	375	2	-	132	-	-
	TH-30	-	-	-	-	-	-	-	-	65	13,691	980	-	-	497	-	-
	TH-31	-	-	-	-	-	-	-	-	-	-	-	-	-	-	-	-
	TH-32	-	-	-	-	-	-	-	-	-	-	-	-	-	-	-	-
TOTAL		16,310	33	28	22	22	56	14	4	833	112,899	9,251	78	29	3,958	142	22

(N) - NOT A SEPARATE PAY ITEM, FOR INFORMATION ONLY

FOR REDUCED PLANS
ORIGINAL SCALE IS IN INCHES
0 1 2 3
ALL DIMENSIONS SHOWN IN FEET
UNLESS OTHERWISE NOTED

THQ-1

8/15/2016
...\511\1858mf001.dgn

REVISION #	DATE	DESCRIPTION AND SHEET NO.	APPROVED BY	DATE

REGISTERED PROFESSIONAL ENGINEER
No. _____
Exp. _____
CIVIL
STATE OF CALIFORNIA

PLAN SCALE: 1"=40'
PROFILE SCALE:
HORIZ:
VERT:

CONTRACT NO: 17-XX
DESIGNED:
DRAWN:
CHECKED:
RECORD DRAWING:
DATE:

DOKKEN ENGINEERING
110 BLUE RAVINE ROAD #200
FOLSOM, CA 95630
PHONE: (916) 858-0642
FAX: (916) 985-1845

CITY OF YUBA CITY

5TH STREET BRIDGE REPLACEMENT
TRAFFIC HANDLING PLAN
QUANTITIES

SHEET NO.
OF
215

TEMPORARY PAVEMENT MARKINGS (PAINT)

STAGE	DESCRIPTION	PAINTED WHITE (SQFT)	DETAIT	REMARKS
STAGE 1	STRAIGHT ARROW	14	TYPE I 10'-0 ARROW	1 @ 14 SQFT
	LEFT/RIGHT TURN ARROW	120	TYPE IV (L)/(R) ARROW	8 @ 15 SQFT
	LEFT/RIGHT TURN & STRAIGHT ARROW	54	TYPE VII (L)/(R) ARROW	2 @ 27 SQFT
	LIMIT LINE	124	LIMIT LINE	124 @ 1' WIDE
	CROSSWALK BAR	123	CROSSWALK	123 @ 1' WIDE
STAGE 2	STRAIGHT ARROW	126	TYPE I 10'-0 ARROW	9 @ 14 SQFT
	LEFT/RIGHT TURN ARROW	336	TYPE IV (L)/(R) ARROW	21 @ 15 SQFT
	LEFT/RIGHT TURN & STRAIGHT ARROW	27	TYPE VII (L)/(R) ARROW	1 @ 27 SQFT
	LIMIT LINE	325	LIMIT LINE	325 @ 1' WIDE
	CROSSWALK BAR	472	CROSSWALK	472 @ 1' WIDE
STAGE 3	STRAIGHT ARROW	84	TYPE I 10'-0 ARROW	6 @ 14 SQFT
	LEFT/RIGHT TURN ARROW	150	TYPE IV (L)/(R) ARROW	10 @ 15 SQFT
	LEFT/RIGHT TURN & STRAIGHT ARROW	108	TYPE VII (L)/(R) ARROW	4 @ 27 SQFT
	LIMIT LINE	168	LIMIT LINE	168 @ 1' WIDE
	CROSSWALK BAR	141	CROSSWALK	141 @ 1' WIDE
	ONLY	22	WORD	1 @ 22 SQFT
	RIGHT/LEFT LANE DROP ARROW	378	TYPE VI ARROW	9 @ 42 SQFT
STAGE 4	STRAIGHT ARROW	70	TYPE I 10'-0 ARROW	5 @ 14 SQFT
	LEFT/RIGHT TURN ARROW	180	TYPE IV (L)/(R) ARROW	12 @ 15 SQFT
	LEFT/RIGHT TURN & STRAIGHT ARROW	81	TYPE VII (L)/(R) ARROW	3 @ 27 SQFT
	LIMIT LINE	232	LIMIT LINE	232 @ 1' WIDE
	CROSSWALK BAR	426	CROSSWALK	426 @ 1' WIDE
	RIGHT/LEFT LANE DROP ARROW	210	TYPE VI ARROW	5 @ 42 SQFT
STAGE 5	STRAIGHT ARROW	126	TYPE I 10'-0 ARROW	9 @ 14 SQFT
	LEFT/RIGHT TURN ARROW	285	TYPE IV (L)/(R) ARROW	19 @ 15 SQFT
	LEFT/RIGHT TURN & STRAIGHT ARROW	135	TYPE VII (L)/(R) ARROW	5 @ 27 SQFT
	LIMIT LINE	76	LIMIT LINE	76 @ 1' WIDE
	CROSSWALK BAR	987	CROSSWALK	987 @ 1' WIDE
	ONLY	44	WORD	2 @ 22 SQFT
	RIGHT/LEFT LANE DROP ARROW	84	TYPE VI ARROW	2 @ 42 SQFT
STAGE 6	STRAIGHT ARROW	42	TYPE I 10'-0 ARROW	3 @ 14 SQFT
	LEFT/RIGHT TURN ARROW	60	TYPE IV (L)/(R) ARROW	4 @ 15 SQFT
	LEFT/RIGHT TURN & STRAIGHT ARROW	54	TYPE VII (L)/(R) ARROW	2 @ 27 SQFT
	LIMIT LINE	55	LIMIT LINE	55 @ 1' WIDE
	CROSSWALK BAR	156	CROSSWALK	156 @ 1' WIDE
	LEFT & RIGHT TURN ARROW	27	TYPE IV (L)&(R) ARROW	1 @ 27 SQFT
	LEFT & RIGHT TURN & STRAIGHT ARROW	36	TYPE VIII ARROW	1 @ 36 SQFT
STAGE 7	STRAIGHT ARROW	112	TYPE I 10'-0 ARROW	8 @ 14 SQFT
	LEFT/RIGHT TURN ARROW	255	TYPE IV (L)/(R) ARROW	17 @ 15 SQFT
	LEFT/RIGHT TURN & STRAIGHT ARROW	81	TYPE VII (L)/(R) ARROW	3 @ 27 SQFT
	LIMIT LINE	227	LIMIT LINE	227 @ 1' WIDE
	CROSSWALK BAR	596	CROSSWALK	596 @ 1' WIDE
	LEFT & RIGHT TURN & STRAIGHT ARROW	36	TYPE VIII ARROW	1 @ 36 SQFT
STAGE 8	STRAIGHT ARROW	70	TYPE I 10'-0 ARROW	5 @ 14 SQFT
	LEFT/RIGHT TURN ARROW	465	TYPE IV (L)/(R) ARROW	31 @ 15 SQFT
	LEFT/RIGHT TURN & STRAIGHT ARROW	27	TYPE VII (L)/(R) ARROW	1 @ 27 SQFT
	LIMIT LINE	187	LIMIT LINE	187 @ 1' WIDE
	CROSSWALK BAR	1,465	CROSSWALK	1,465 @ 1' WIDE
	ONLY	22	WORD	1 @ 22 SQFT
TOTAL		9,681		

(N) - NOT A SEPARATE PAY ITEM, FOR INFORMATION ONLY

STAGE	REMOVE THERMOPLASTIC PAVEMENT MARKING	REMOVE PAVEMENT MARKER	REMOVE THERMOPLASTIC TRAFFIC STRIPE		
			4" WHITE	8" WHITE	4" YELLOW
	SF	EA	LF	LF	LF
STAGE 1	926	1027	708	300	1104
STAGE 2	44	356	165	96	898
STAGE 3	29	52	-	-	-
SUBTOTAL	999	1435	873	792*	2002
TOTAL	999	1435	3667		

* = LENGTH IS DUPLICATED TO ACCOUNT FOR THICKNESS OF STRIPE

FOR REDUCED PLANS
ORIGINAL SCALE IS IN INCHES
0 1 2 3
ALL DIMENSIONS SHOWN IN FEET
UNLESS OTHERWISE NOTED

THQ-2

8/15/2016
...\511\1858mf002.dgn

REVISION #	DATE:	DESCRIPTION AND SHEET NO.:	APPROVED BY:	DATE:

REGISTERED PROFESSIONAL ENGINEER
JOSE J. OSTDIEK
No. 65334
Exp. 9/30/17
CIVIL
STATE OF CALIFORNIA

LEGEND:

- TYPE IV (L/R) ARROW PAVEMENT MARKING
- TYPE VII (L/R) ARROW PAVEMENT MARKING
- ONLY "ONLY" PAVEMENT MARKING
- # LINE DETAIL (CALTRANS)
- TYPE 1 10' ARROW PAVEMENT MARKING
- "BIKE LANE" PAVEMENT MARKING WITH ARROW
- XW 1' WIDE CROSSWALK OR LIMIT LINE
- CONTINENTAL HIGH VISIBILTY CROSSWALK (SEE SHEET PD-5 FOR DETAILS)
- DIAGONAL PAVEMENT MARKING (SEE SHEET PD-5 FOR DETAILS)
- CHEVRON PAVEMENT MARKING (SEE SHEET PD-5 FOR DETAILS)

STRIPING GENERAL NOTES :

1. ALL WORK SHALL BE DONE IN ACCORDANCE WITH:
   CALTRANS STANDARD PLANS 2010, AND
   THE CALIFORNIA MUTCD 2012
2. ALL CROSSWALKS TO BE 10' WIDE
3. FOR PARK PARKING STRIPING, SEE PARK DETAILS SHEETS

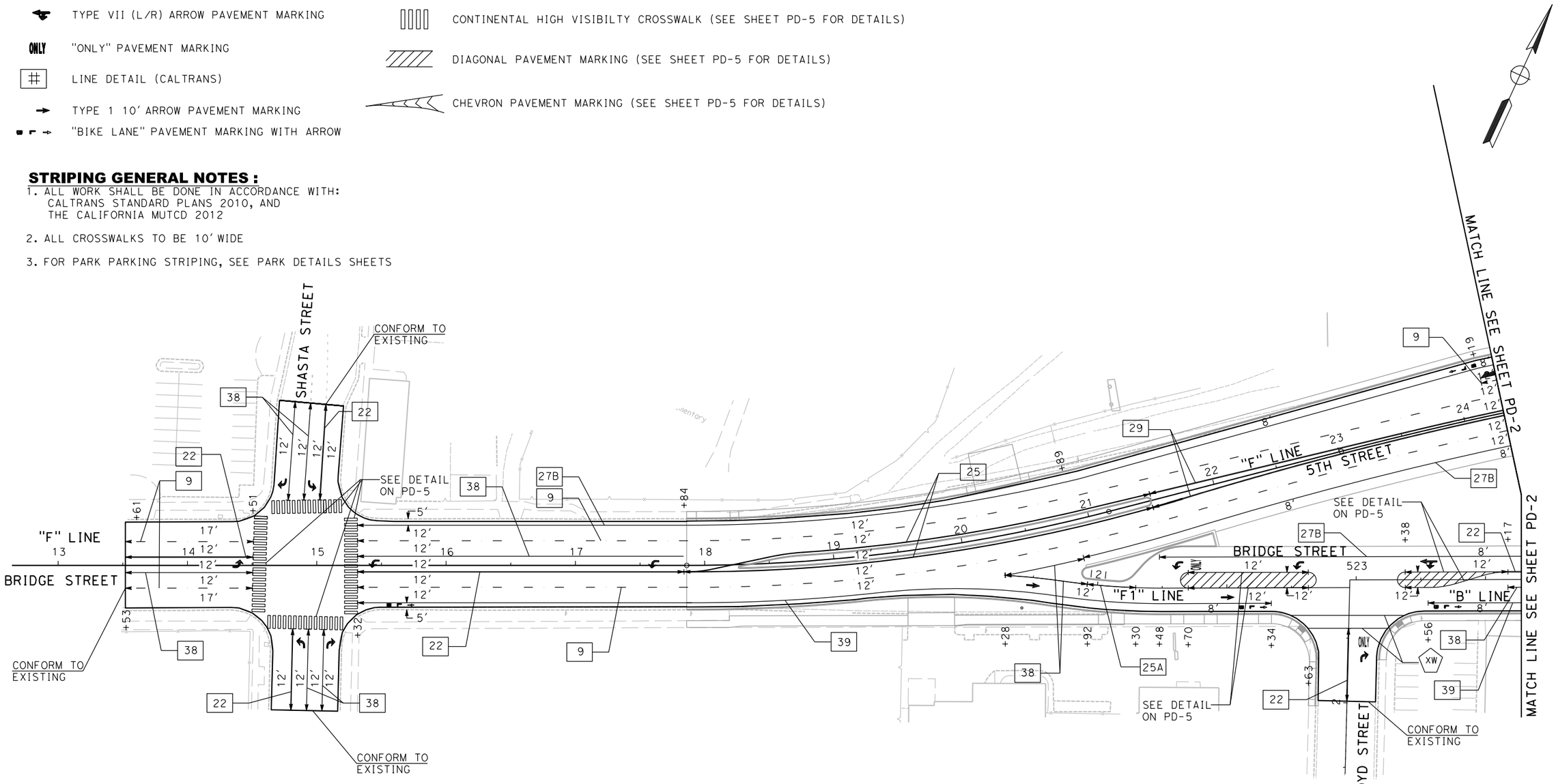

FOR REDUCED PLANS
ORIGINAL SCALE IS IN INCHES
0 1 2 3
ALL DIMENSIONS SHOWN IN FEET
UNLESS OTHERWISE NOTED

PD-1

PLAN SCALE: 1"=40'
PROFILE SCALE:
HORIZ:
VERT:

CONTRACT NO: 17-XX
DESIGNED: J. OSTDIEK
DRAWN: J. RODRIGUEZ
CHECKED:
RECORD DRAWING: DATE:

DOKKEN ENGINEERING
110 BLUE RAVINE ROAD #200
FOLSOM, CA 95630
PHONE: (916) 858-0642
FAX: (916) 858-0643

CITY OF YUBA CITY

5TH STREET BRIDGE REPLACEMENT
PAVEMENT DELINEATION

SHEET NO.
OF
215

8/15/2016
...\511\1858na001.dgn

NOTE:

1. SEE PD-5 FOR PAVEMENT DELINEATION ON SUTTER AND SECOND STREETS

REVISION #	DATE:	DESCRIPTION AND SHEET NO.:	APPROVED BY:	DATE:

REGISTERED PROFESSIONAL ENGINEER
JOSE J. OSTDIEK
No. 65334
Exp. 9/30/17
CIVIL
STATE OF CALIFORNIA

PLAN SCALE: 1"=40'
PROFILE SCALE:
HORIZ:
VERT:

CONTRACT NO: 17-XX
DESIGNED: J. OSTDIEK
DRAWN: J. RODRIGUEZ
CHECKED:
RECORD DRAWING: DATE:

DOKKEN ENGINEERING
110 BLUE RAVINE ROAD #200
FOLSOM, CA 95630
PHONE: (916) 858-0642
FAX: (916) 858-0643

CITY OF YUBA CITY

5TH STREET BRIDGE REPLACEMENT
PAVEMENT DELINEATION

SHEET NO. 2 OF 215

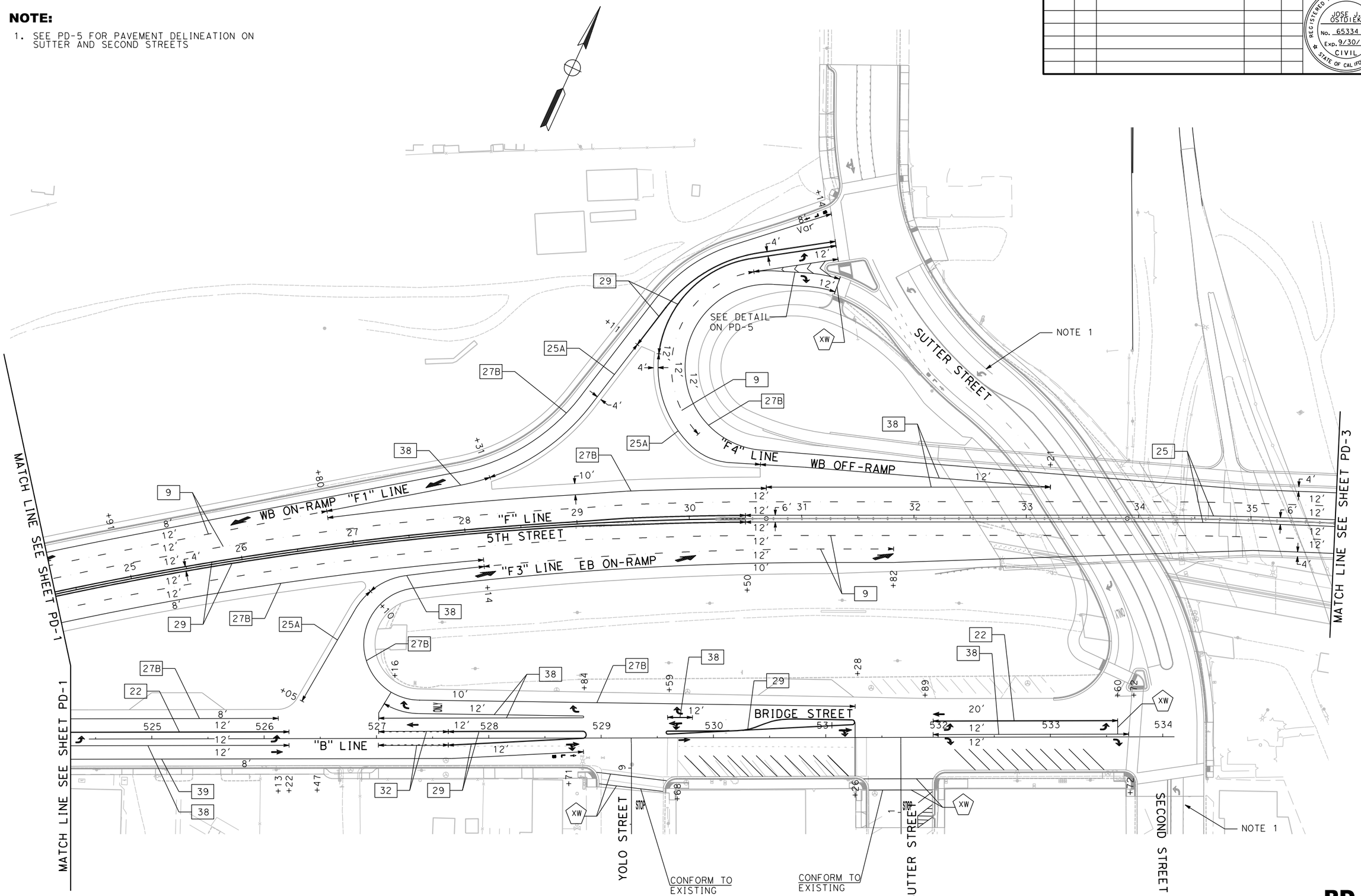

FOR REDUCED PLANS ORIGINAL SCALE IS IN INCHES 0 1 2 3

ALL DIMENSIONS SHOWN IN FEET UNLESS OTHERWISE NOTED

PD-2

8/15/2016

...\511\1858na002.dgn

REVISION #	DATE:	DESCRIPTION AND SHEET NO.:	APPROVED BY:	DATE:

REGISTERED PROFESSIONAL ENGINEER
JOSE J. OSTDIEK
No. 65334
Exp. 9/30/17
CIVIL
STATE OF CALIFORNIA

PLAN SCALE: 1"=40'
PROFILE SCALE:
HORIZ:
VERT:

CONTRACT NO: 17-XX
DESIGNED: J. OSTDIEK
DRAWN: J. RODRIGUEZ
CHECKED:
RECORD DRAWING:
DATE:

DOKKEN ENGINEERING
110 BLUE RAVINE ROAD #200
FOLSOM, CA 95630
PHONE: (916) 858-0642
FAX: (916) 858-0643

CITY OF YUBA CITY

5TH STREET BRIDGE REPLACEMENT
PAVEMENT DELINEATION

SHEET NO.
OF
215

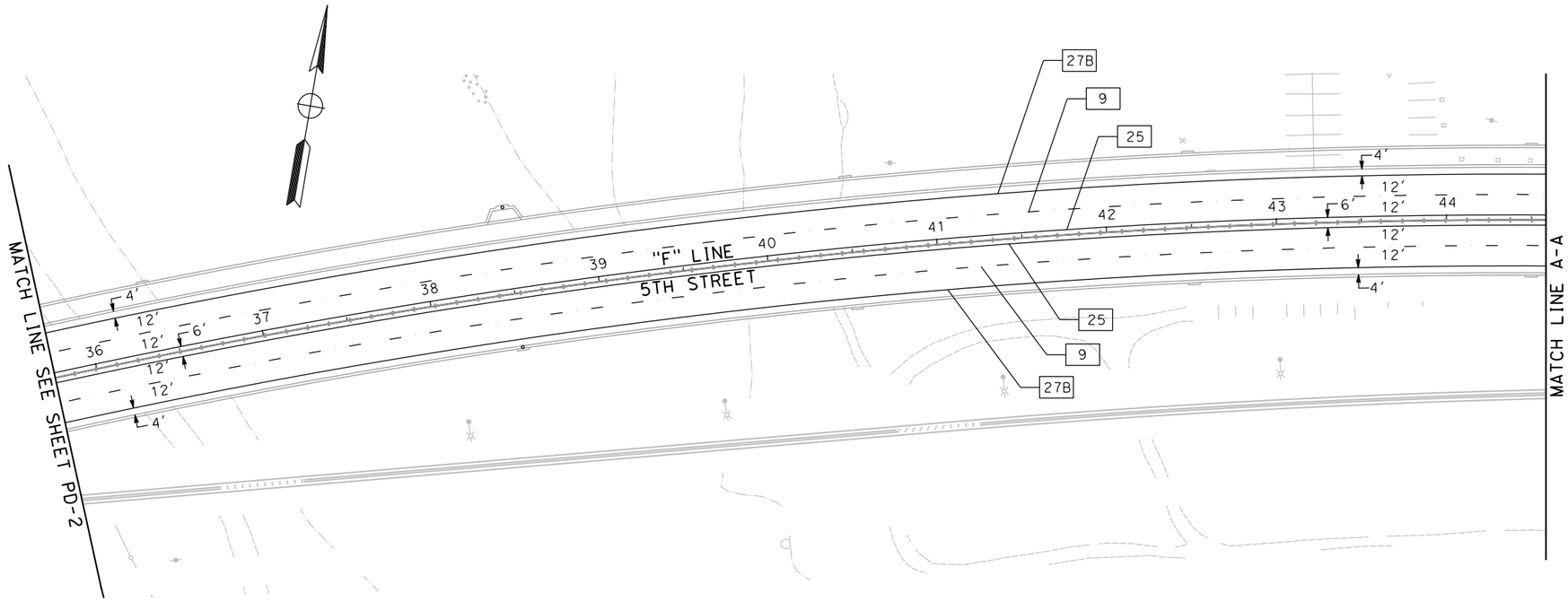

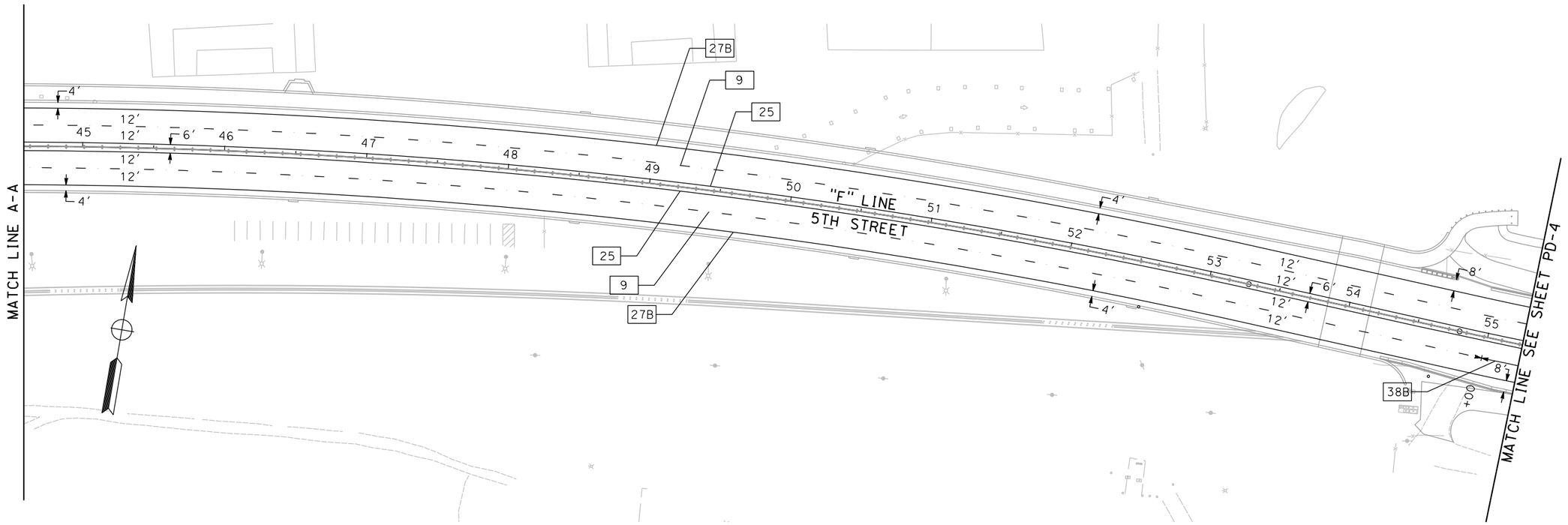

FOR REDUCED PLANS
ORIGINAL SCALE IS IN INCHES
0 1 2 3
ALL DIMENSIONS SHOWN IN FEET
UNLESS OTHERWISE NOTED

PD-3

8/15/2016

...\5111\1858no003.dgn

REVISION #	DATE:	DESCRIPTION AND SHEET NO.:	APPROVED BY:	DATE:

REGISTERED PROFESSIONAL ENGINEER
JOSE J. OSTDIEK
No. 65334
Exp. 9/30/17
CIVIL
STATE OF CALIFORNIA

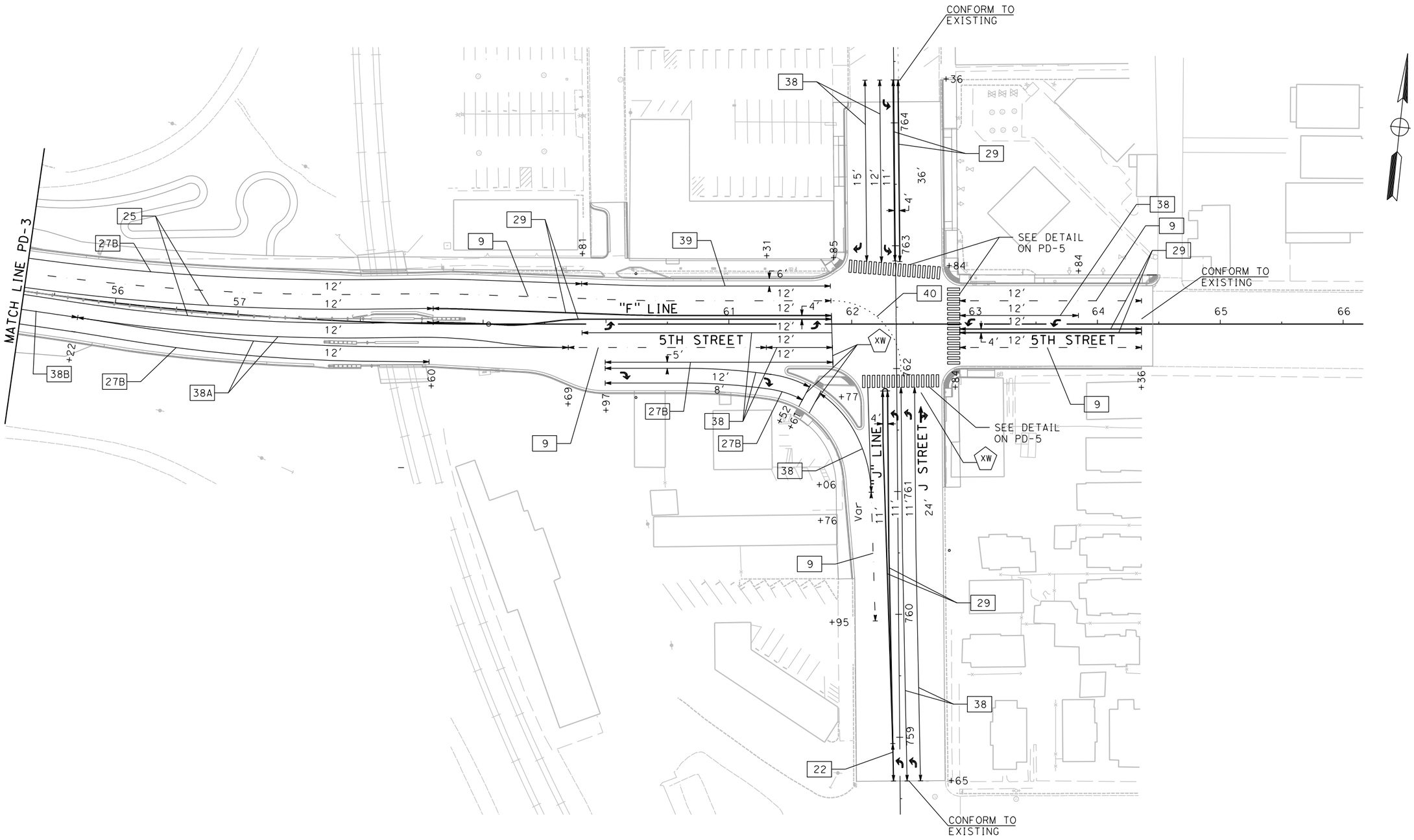

FOR REDUCED PLANS
ORIGINAL SCALE IS IN INCHES

0 1 2 3

ALL DIMENSIONS SHOWN IN FEET
UNLESS OTHERWISE NOTED

PLAN SCALE: 1"=40'
PROFILE SCALE:
HORIZ:
VERT:

CONTRACT NO: 17-XX
DESIGNED: J. OSTDIEK
DRAWN: J. RODRIGUEZ
CHECKED:
RECORD DRAWING:
DATE:

DOKKEN ENGINEERING
110 BLUE RAVINE ROAD #200
FOLSOM, CA 95630
PHONE: (916) 858-0642
FAX: (916) 985-1845

CITY OF YUBA CITY

5TH STREET BRIDGE REPLACEMENT

PAVEMENT DELINEATION

PD-4

SHEET NO.
OF
215

...\511\1858ng004.dgn
8/15/2016

REVISION #	DATE:	DESCRIPTION AND SHEET NO.:	APPROVED BY:	DATE:

REGISTERED PROFESSIONAL ENGINEER
JOSE J. OSTDIEK
No. 65334
Exp. 9/30/17
CIVIL
STATE OF CALIFORNIA

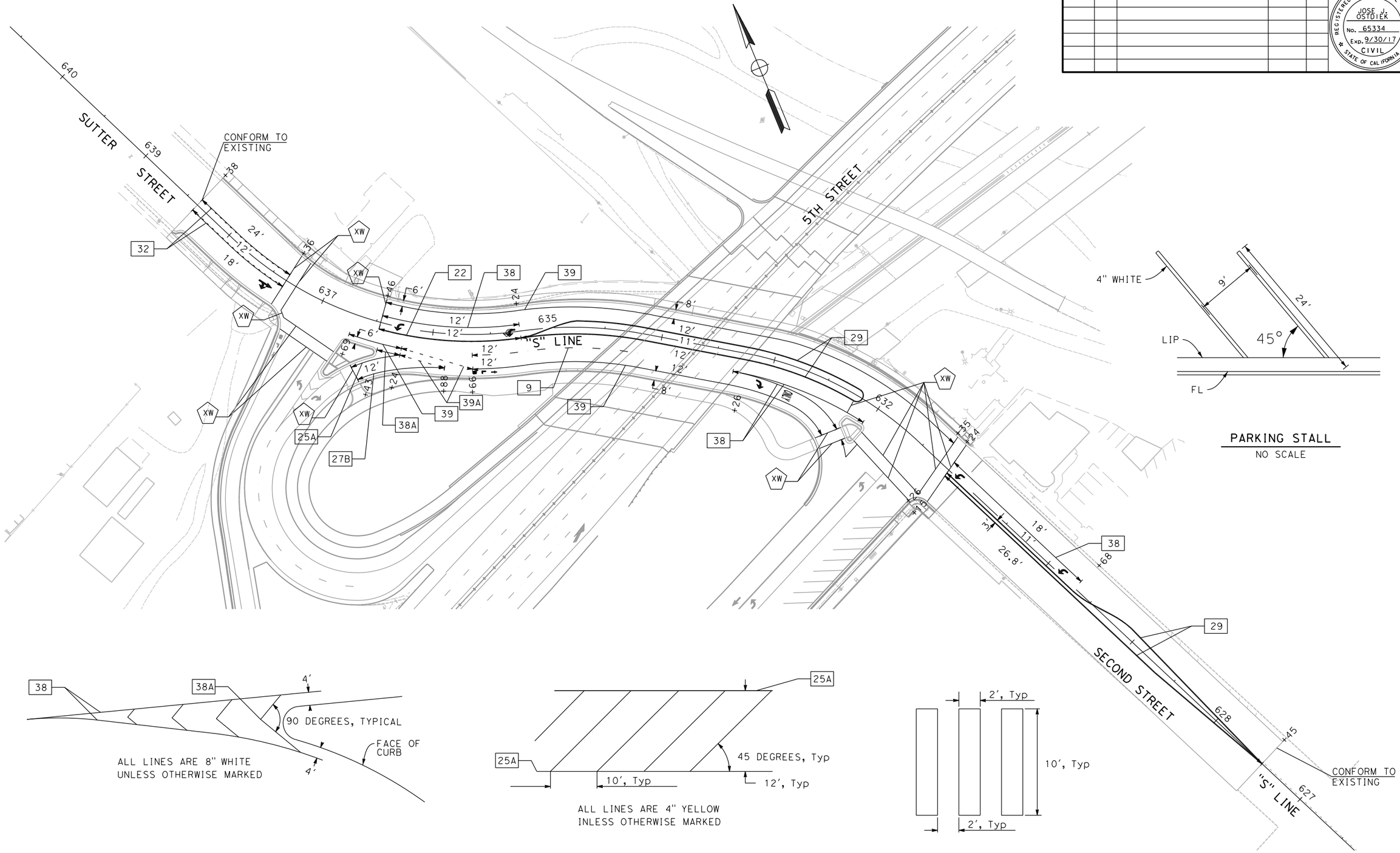

CHEVRON PAVEMENT MARKING
NO SCALE

DIAGONAL PAVEMENT MARKING
NO SCALE

CONTINENTAL HIGH VISIBILITY CROSSWALK
NO SCALE

FOR REDUCED PLANS
ORIGINAL SCALE IS IN INCHES
0 1 2 3
ALL DIMENSIONS SHOWN IN FEET
UNLESS OTHERWISE NOTED

PD-5

PLAN SCALE: 1"=40'
PROFILE SCALE:
HORIZ:
VERT:

CONTRACT NO: **17-XX**
DESIGNED: J. OSTDIEK
DRAWN: J. RODRIGUEZ
CHECKED:
RECORD DRAWING: DATE:

DOKKEN ENGINEERING
110 BLUE RAVINE ROAD #200
FOLSOM, CA 95630
PHONE: (916) 858-0642
FAX: (916) 985-1845

CITY OF **YUBA CITY**

5TH STREET BRIDGE REPLACEMENT
PAVEMENT DELINEATION

SHEET NO.
OF
215

8/15/2016
...\511\1858na005.dgn

THERMOPLASTIC TRAFFIC STRIPE

SHEET NO.	DETAIL NO.	THERMOPLASTIC (4" STRIPE) WHITE (LF)	THERMOPLASTIC (4" STRIPE) YELLOW (LF)	THERMOPLASTIC (6" STRIPE) WHITE (LF)	THERMOPLASTIC (8" STRIPE) WHITE (LF)	MARKERS (EA) TYPE D	MARKERS (EA) TYPE G	MARKERS (EA) TYPE H	REMARKS
PD-1	9	99					3		
		99					3		
		895					20		
		903					20		
		12					2		
	22		* 198			10			99X2=198
			* 148			8			74X2=148
			* 126			7			63X2=126
			* 510			23			255X2=510
			* 112			6			56X2=112
			* 20			2			10X2=20
	25		363					9	
			365					9	
	25A		37					2	
			93					3	
			93					3	
			79					3	
			81					3	
	27B	893							
		341							
		280							
	29		* 560			13			280X2=560
			* 560			13			280X2=560
	38				98		6		
					75		5		
					76		5		
					63		4		
					63		4		
					252		12		
					62		4		
					69		4		
					10		2		
	39			708					
				72					
PD-2	9	252					7		
		1148					25		
		1140					25		
		365					9		
		190					5		
	22		* 388			20			194X2=388
			* 328			16			164X2=328
	25		525					12	
			525					12	
	25A		116					6	
			180					9	
			156					8	
	27B	791							
		800							
		392							
		380							
		1361							
		185							
	29		*1240			27			620X2=1240
			*1240			27			620X2=1240
			* 420			10			210X2=424
			* 406			10			203X2=406
			* 490			12			245X2=490
			* 658			15			329X2=658
	32		* 128			6			64X2=128
			* 128			6			64X2=128
	38				194		10		
					363		17		
					174		9		
					105		6		
					22		2		
					253		12		
					259		12		
					76		5		SEE DETAIL ON PD-5
					77		5		SEE DETAIL ON PD-5
					148		8		
	TOTAL=	10,526	10,273	780	2,439	231	251	79	

* THE QUANTITY IS DOUBLE FROM THAT SHOWN ON THE RESPECTIVE PLAN SHEET PER CALTRANS SPECIFICATIONS

THERMOPLASTIC PAVEMENT MARKINGS

DESCRIPTION	THERMOPLASTIC PAVEMENT MARKING WHITE (SQFT)	THERMOPLASTIC PAVEMENT MARKING BLUE (SQFT)	DETAIL	STANDARD PLANS	REMARKS
TURN ARROW	600		TYPE III	A24A	40 @ 15 SQFT
TURN/THROUGH ARROW	189		TYPE III	A24A	7 @ 27 SQFT
LANE DROP ARROW	252		TYPE III	A24A	6 @ 42 SQFT
THROUGH ARROW	70		TYPE III	A24B	5 @ 14 SQFT
BIKE LANE ARROW	21		TYPE III	A24B	6 @ 3.5 SQFT
BIKE	30		WORD	A24B	6 @ 5 SQFT
LANE	36		WORD	A24B	6 @ 6 SQFT
ONLY	66		WORD	A24B	3 @ 22 SQFT
STOP	44		WORD	A24D	2 @ 22 SQFT
CROSSWALK/LIMIT LINE	1822		CROSSWALK	RSP A24F	1822 @ 1' WIDE
HIGH VISIBILITY CROSSWALK	1340		CROSSWALK	RSP A24F	1' WIDE
PARKING STALL STRIPE	195		4" STRIPE	----	583 @ 4" WIDE
DISABLED PERSONS PARKING STALL STRIPE		100	4" STRIPE	----	100 @ 4" WIDE
DISABLED PERSONS PARKING SYMBOL	9	14	SYMBOL	A24C	1 @ 9 SQFT 1 @ 14 SQFT
TOTAL =	4,674	114			

REVISION #	DATE:	DESCRIPTION AND SHEET NO.:	APPROVED BY:	DATE:

REGISTERED PROFESSIONAL ENGINEER
JOSE J. OSTDIEK
No. 65334
Exp. 9/30/17
CIVIL
STATE OF CALIFORNIA

PLAN SCALE:
PROFILE SCALE:
HORIZ:
VERT:

CONTRACT NO: 17-XX
DESIGNED: J. OSTDIEK
DRAWN: J. RODRIGUEZ
CHECKED:
RECORD DRAWING:
DATE:

DOKKEN ENGINEERING
110 BLUE RAVINE ROAD #200
FOLSOM, CA 95630
PHONE: (916) 858-0642
FAX: (916) 985-1845

CITY OF YUBA CITY

5TH STREET BRIDGE REPLACEMENT
PAVEMENT DELINEATION

SHEET NO.
OF
215

PDQ-1

FOR REDUCED PLANS
ORIGINAL SCALE IS IN INCHES
0 1 2 3
ALL DIMENSIONS SHOWN IN FEET
UNLESS OTHERWISE NOTED

8/15/2016
...\51\1858nc001.dgn

REVISION #	DATE:	DESCRIPTION AND SHEET NO.:	APPROVED BY:	DATE:

REGISTERED PROFESSIONAL ENGINEER
JOSE J. OSTDIEK
No. 65334
Exp. 9/30/17
CIVIL
STATE OF CALIFORNIA

THERMOPLASTIC TRAFFIC STRIPE

SHEET NO.	DETAIL NO.	THERMOPLASTIC (4" STRIPE) WHITE (LF)	THERMOPLASTIC (4" STRIPE) YELLOW (LF)	THERMOPLASTIC (6" STRIPE) WHITE (LF)	THERMOPLASTIC (8" STRIPE) WHITE (LF)	MARKERS (EA) TYPE D	MARKERS (EA) TYPE G	MARKERS (EA) TYPE H	REMARKS
PD-2	38A				48				SEE DETAIL ON PD-5
	39			457					
PD-3	9	1956					42		
		1918					41		
	25		1951					42	
			1950					42	
	27B	1962							
		1939							
	38B				28		14		
PD-4	9	657					4		
		161					4		
		148					4		
		148					4		
		105					3		
	22		* 60			4			30X2=60
	25		335					7	
			337					7	
	27B	450							
		339							
		185							
		162							
	29		* 650			14			325X2=650
			* 650			14			325X2=650
			* 296			7			148X2=296
			* 296			7			148X2=296
			* 296			7			148X2=296
			* 296			7			148X2=296
			* 574			12			287X2=574
			* 586			12			293X2=586
	38				203		9		
					54		3		
					172		8		
					94		5		
					97		5		
					147		7		
					148		7		
					320		14		
					320		14		
	38A				400		17		
					401		17		
	38B				46		2		
	39			203					
	40			90					
PD-5	9	148							
	22		* 250			12			125X2=250
	25A		44					2	
	27B	77							
	29		*1244			25			622X2=1244
			* 750			16			375X2=750
			* 744			16			372X2=744
	32		* 202			5			101X2=202
			* 206			5			103X2=206
	38				120		6		
					122		5		
					107		5		
					151		7		
	38A				20		1		
	TOTAL=	10,355	11,717	750	2,998	163	248	100	

* THE QUANTITY IS DOUBLE FROM THAT SHOWN ON THE RESPECTIVE PLAN SHEET PER CALTRANS SPECIFICATIONS

THERMOPLASTIC TRAFFIC STRIPE

SHEET NO.	DETAIL NO.	THERMOPLASTIC (4" STRIPE) WHITE (LF)	THERMOPLASTIC (4" STRIPE) YELLOW (LF)	THERMOPLASTIC (6" STRIPE) WHITE (LF)	THERMOPLASTIC (8" STRIPE) WHITE (LF)	MARKERS (EA) TYPE D	MARKERS (EA) TYPE G	MARKERS (EA) TYPE H	REMARKS
PD-5	39			525					
				47					
				321					
	39A			64					
				40					
C SUBTOTAL=				997					
A SUBTOTAL=		10,526	10,273	780	2,439	231	251	79	
B SUBTOTAL=		10,355	11,717	750	2,998	163	248	100	
TOTAL=		20,881	21,990	2,527	5,437	394	499	179	

* THE QUANTITY IS DOUBLE FROM THAT SHOWN ON THE RESPECTIVE PLAN SHEET PER CALTRANS SPECIFICATIONS

PAINT PARKING LOT STRIPING AND MARKING

SHEET NO.	DETAIL NO.	PAINT (4" STRIPE) WHITE (LF)	PAINT (4" STRIPE) YELLOW (LF)	MARKERS (EA) TYPE I 10'	MARKERS (EA) TYPE IV (B)	MARKERS (EA) TYPE IV	MARKERS (EA) TYPE VII (L)	REMARKS
PPD-1				168				12 @ 14 SQFT
PPD-1					30			1 @ 30 SQFT
PPD-1						60		4 @ 15 SQFT
PPD-1							27	4 @ 15 SQFT
PPD-1	1		200					
PPD-1			1337					
PPD-1		4842						
PPD-2				196				14 @ 14 SQFT
PPD-2						75		5 @ 15 SQFT
PPD-2			1281					
PPD-2		4816						
PPD-2	1		629					
TOTAL=		9658	3447	364	30	135	27	

FOR REDUCED PLANS
ORIGINAL SCALE IS IN INCHES

0 1 2 3

ALL DIMENSIONS SHOWN IN FEET
UNLESS OTHERWISE NOTED

PDQ-2

PLAN SCALE:
PROFILE SCALE:
HORIZ:
VERT:

CONTRACT NO: 17-XX
DESIGNED: J. OSTDIEK
DRAWN: J. RODRIGUEZ
CHECKED:
RECORD DRAWING:
DATE:

DOKKEN ENGINEERING
110 BLUE RAVINE ROAD #200
FOLSOM, CA 95630
PHONE: (916) 858-0642
FAX: (916) 985-1845

CITY OF YUBA CITY

5TH STREET BRIDGE REPLACEMENT
PAVEMENT DELINEATION

SHEET NO.
OF
215

8/15/2016

...\511\1858nc002.dgn

LEGEND:

- ▲ EXISTING SIGN TO REMAIN
- ● ROADSIDE SIGN TO BE REMOVED
- ■ RELOCATE ROADSIDE SIGN
- ⬟ NEW ROADSIDE SIGN(S)
- ★ RESET ROADSIDE SIGN
- EXISTING ROADSIDE SIGN (ONE POST)
- EXISTING ROADSIDE SIGN (TWO POST)
- EXISTING ROADSIDE SIGN (STRAP & SADDLE)
- ROADSIDE SIGN (ONE POST)
- ROADSIDE SIGN (TWO POST)
- ROADSIDE SIGN (STRAP & SADDLE)
- (1-X) ROADSIDE SIGN (WITH NUMBER)
- OBJECT MARKER TYPE P OR R, AS NOTED

REVISION #	DATE:	DESCRIPTION AND SHEET NO.:	APPROVED BY:	DATE:

REGISTERED PROFESSIONAL ENGINEER
JOSE J. OSTDIEK
No. 65334
Exp. 9/30/17
CIVIL
STATE OF CALIFORNIA

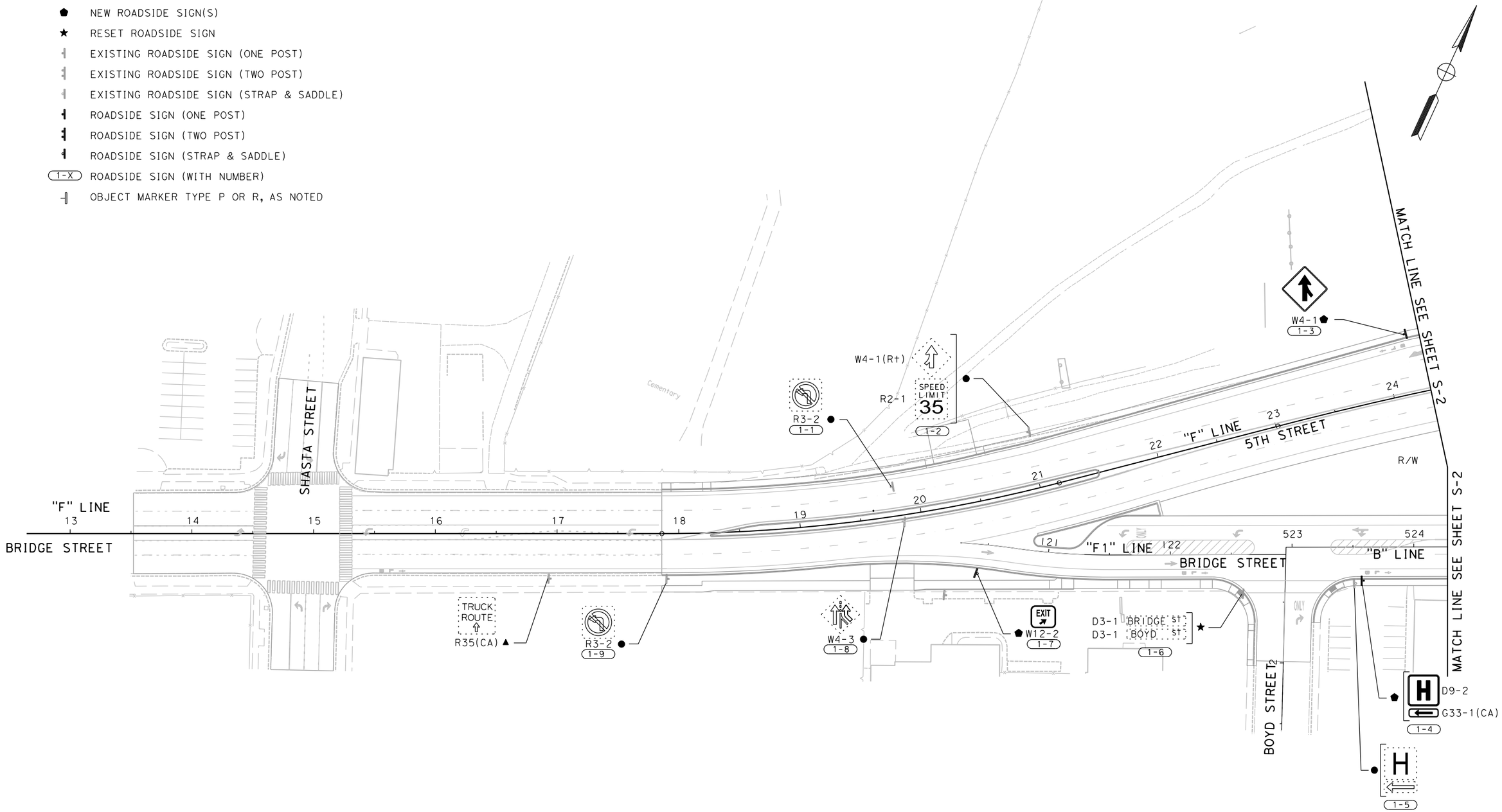

FOR REDUCED PLANS
ORIGINAL SCALE IS IN INCHES
0 1 2 3
ALL DIMENSIONS SHOWN IN FEET
UNLESS OTHERWISE NOTED

S-1

PLAN SCALE: 1"=40'
PROFILE SCALE:
HORIZ:
VERT:

CONTRACT NO: 17-XX
DESIGNED: J. OSTDIEK
DRAWN: J. RODRIGUEZ
CHECKED:
RECORD DRAWING:
DATE:

DOKKEN ENGINEERING
110 BLUE RAVINE ROAD #200
FOLSOM, CA 95630
PHONE: (916) 858-0642
FAX: (916) 858-0643

CITY OF YUBA CITY

5TH STREET BRIDGE REPLACEMENT
SIGN PLAN

SHEET NO.
OF
215

8/15/2016
...\511\18580a001.dgn

REVISION #	DATE	DESCRIPTION AND SHEET NO.	APPROVED BY	DATE

REGISTERED PROFESSIONAL ENGINEER
JOSE J. OSTDIEK
No. 65334
Exp. 9/30/17
CIVIL
STATE OF CALIFORNIA

PLAN SCALE: 1"=40'
PROFILE SCALE:
HORIZ:
VERT:

CONTRACT NO: 17-XX
DESIGNED: J. OSTDIEK
DRAWN: J. RODRIGUEZ
CHECKED:
RECORD DRAWING:
DATE:

DOKKEN ENGINEERING
110 BLUE RAVINE ROAD #200
FOLSOM, CA 95630
PHONE: (916) 858-0642
FAX: (916) 985-1820

CITY OF YUBA CITY

5TH STREET BRIDGE REPLACEMENT

SIGN PLAN

SHEET NO.
OF
215

8/15/2016

...\511\1858oo002.dgn

MATCH LINE SEE SHEET S-1

MATCH LINE SEE SHEET S-3

BRIDGE ST
SUTTER ST
G1-7(CA) 2-7
YIELD
R1-2 2-15
W8-5 2-23
EXIT 15 MPH
W13-2 2-24
W11-2
R4-7
TYPE N(CA)
2-25
BIKE ROUTE D11-1
G33-1(CA)
BIKE ROUTE D11-1
G33-1(CA)
2-28
R4-7
TYPE N
2-29
W11-2
D16-7p
2-31 2-33
BRIDGE ST D3-1
SECOND ST D3-1
STOP R1-1
2-34
NO PARKING ANY TIME
R26(CA) 2-35
R4-7
TYPE N(CA) 2-36
VERTICAL CLEARANCE 15'-0"
W34B(CA) 2-37 2-40 2-48
BRIDGE ST
G8-22(CA) 2-38
2ND ST
G8-22(CA) 2-39
LIMITED SIGHT DISTANCE
SPECIAL 2-41
W6-3
SPEED LIMIT 35
R2-1 2-42
15'-0"
300 FT AHEAD
W12-2
W34A(CA) 2-45
LANE ENDS MERGE LEFT
W9-2
W8-5 2-47
Marysville
Marysville
G8-1(CA) 2-50
STOP
R1-1 2-51
NARROW BRIDGE
W5-2 2-52
BIKE LANE R81(CA)
END R81B(CA)
BIKE ROUTE D11-1
G33-1(CA)
BEGIN R81A(CA)
2-53 2-54
R3-1 2-17
R5-1
R5-1a
DO NOT ENTER
WRONG WAY
2-16
STOP
R1-1 2-18
W4-1 (R+) 2-19
R3-2 2-20
R4-7
TYPE N 2-21
DRIVING OR CLIMBING ON LEVEE PROHIBITED
CHAPTER 1140 SUTTER CO. ORD.
SPECIAL
NO CAMPING ALLOWED
YUBA CITY MUNI. CODE SECTION 5-20.03 CITY OF YUBA CITY
SPECIAL 2-26
DRIVING OR CLIMBING ON LEVEE PROHIBITED
CHAPTER 1140 SUTTER CO. ORD.
SPECIAL
NO CAMPING ALLOWED
YUBA CITY MUNI. CODE SECTION 5-20.03 CITY OF YUBA CITY
SPECIAL 2-27
SPEED LIMIT 35
R2-1 2-3
W4-1 2-55
ENTERING YUBA CITY URBAN AREA POPULATION 65,000 ELEVATION 56
SPECIAL 2-2
ENTERING YUBA CITY URBAN AREA POPULATION 65,000 ELEVATION 56
SPECIAL 2-1
W1-8 2-4 2-5 2-6 2-7
W1-8 2-8 2-9 2-10 2-11 2-12 2-13
W4-6 2-14
2-15
BRIDGE ST
SUTTER ST
G1-7(CA) 2-22
2-23
2-24
2-25
"S" LINE
SUTTER STREET
"F4" LINE
WB OFF-RAMP
"F2" LINE
WB ON-RAMP
"F" LINE
5TH STREET
"F3" LINE EB ON-RAMP
"B" LINE
BRIDGE STREET
SECOND STREET
EXIT 15 MPH
W13-2 2-46
2-52
2-42
2-41
2-40
2-39
2-38
2-37
2-36
2-35
2-28
2-29
TWIN CITIES MEMORIAL BRIDGE
BRIDGE XXXXXXX
G11-4.1(CA) 2-30
2-31
W4-1 2-43
2-47
2-48
Marysville
Marysville
G8-1(CA) 2-49
2-50
2-51
RIGHT LANE MUST TURN RIGHT
W13-2 2-44
2-45
2-53
SPEED LIMIT 25
R2-1
NO OUTLET
W14-2
BRIDGE ST D3-1
HEIKEN WAY D3-1
STOP R1-1
2-56
D3-1 YOLO ST
D3-1 BRIDGE ST
R1-1
STOP
20 MINUTE PARKING
R32A(CA)(MOD)
2-54
D3-1 BRIDGE ST
D3-1 SUTTER ST
R1-1
STOP
2-57
2 HOUR PARKING 9AM TO 6PM
2 HOUR PARKING 9AM TO 6PM
SUNDAYS AND HOLIDAYS EXCEPTED
R32(CA)(MOD)
NO PARKING ANY TIME
R26(CA) 2-32
2-34
2-33

FOR REDUCED PLANS
ORIGINAL SCALE IS IN INCHES
0 1 2 3
ALL DIMENSIONS SHOWN IN FEET
UNLESS OTHERWISE NOTED

S-2

REVISION #	DATE:	DESCRIPTION AND SHEET NO.:	APPROVED BY:	DATE:

REGISTERED PROFESSIONAL ENGINEER
JOSE J. OSTDIEK
No. 65334
Exp. 9/30/17
CIVIL
STATE OF CALIFORNIA

PLAN SCALE: 1"=40'
PROFILE SCALE:
HORIZ:
VERT:

CONTRACT NO: 17-XX
DESIGNED: J. OSTDIEK
DRAWN: J. RODRIGUEZ
CHECKED:
RECORD DRAWING:
DATE:

DOKKEN ENGINEERING
110 BLUE RAVINE ROAD #200
FOLSOM, CA 95630
PHONE: (916) 858-0642
FAX: (916) 985-1845

CITY OF YUBA CITY

5TH STREET BRIDGE REPLACEMENT

SIGN PLAN

SHEET NO.
OF
215

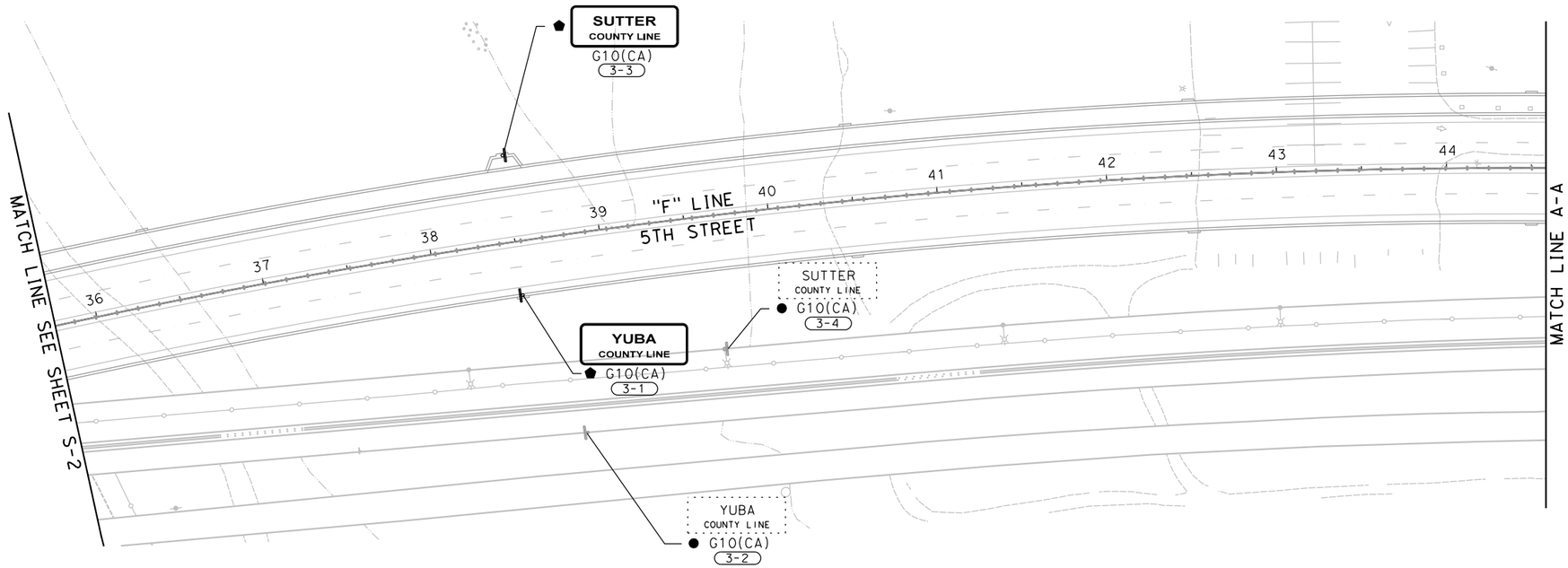

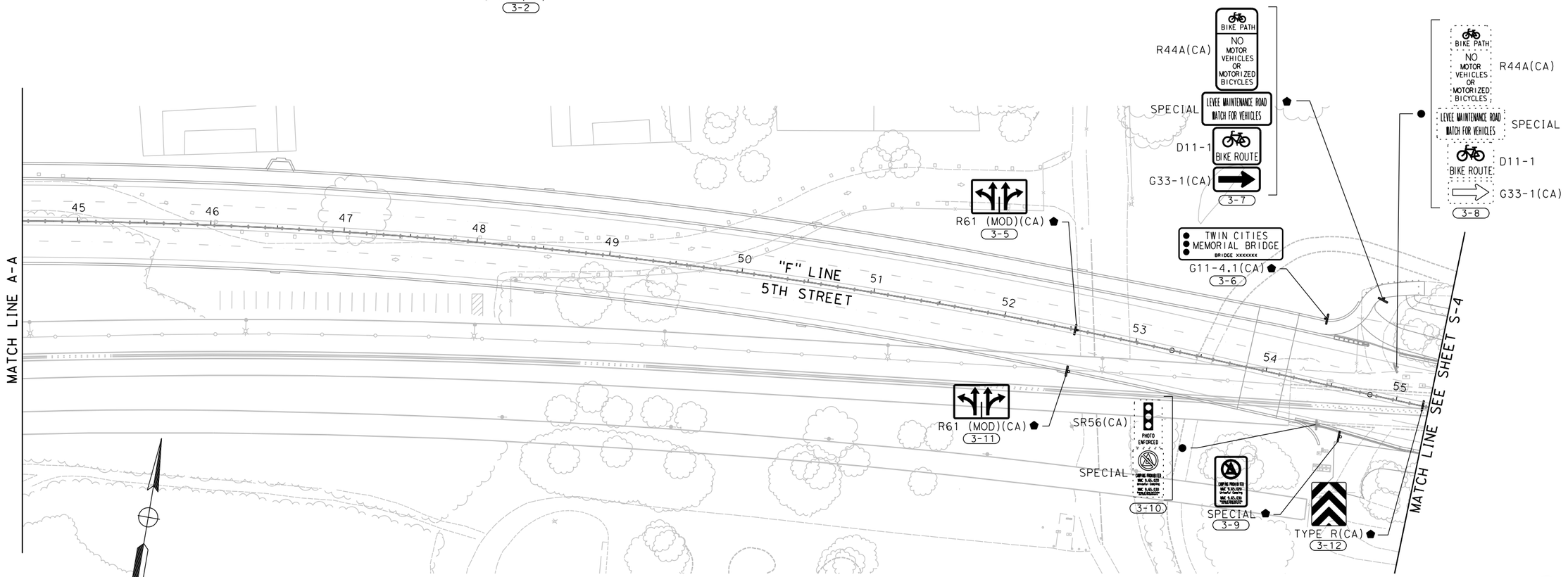

FOR REDUCED PLANS
ORIGINAL SCALE IS IN INCHES
0 1 2 3
ALL DIMENSIONS SHOWN IN FEET
UNLESS OTHERWISE NOTED

S-3

8/15/2016
...\511\1858a0003.dgn

REVISION #	DATE:	DESCRIPTION AND SHEET NO.:	APPROVED BY:	DATE:

REGISTERED PROFESSIONAL ENGINEER
JOSE J. OSTDIEK
No. 65334
Exp. 9/30/17
CIVIL
STATE OF CALIFORNIA

PLAN SCALE: 1"=40'
PROFILE SCALE:
HORIZ:
VERT:

CONTRACT NO: 17-XX
DESIGNED: J. OSTDIEK
DRAWN: J. RODRIGUEZ
CHECKED:
RECORD DRAWING:
DATE:

DOKKEN ENGINEERING
110 BLUE RAVINE ROAD #200
FOLSOM, CA 95630
PHONE: (916) 858-0642
FAX: (916) 985-1845

CITY OF YUBA CITY

5TH STREET BRIDGE REPLACEMENT

SIGN PLAN

SHEET NO.
OF
215

S-4

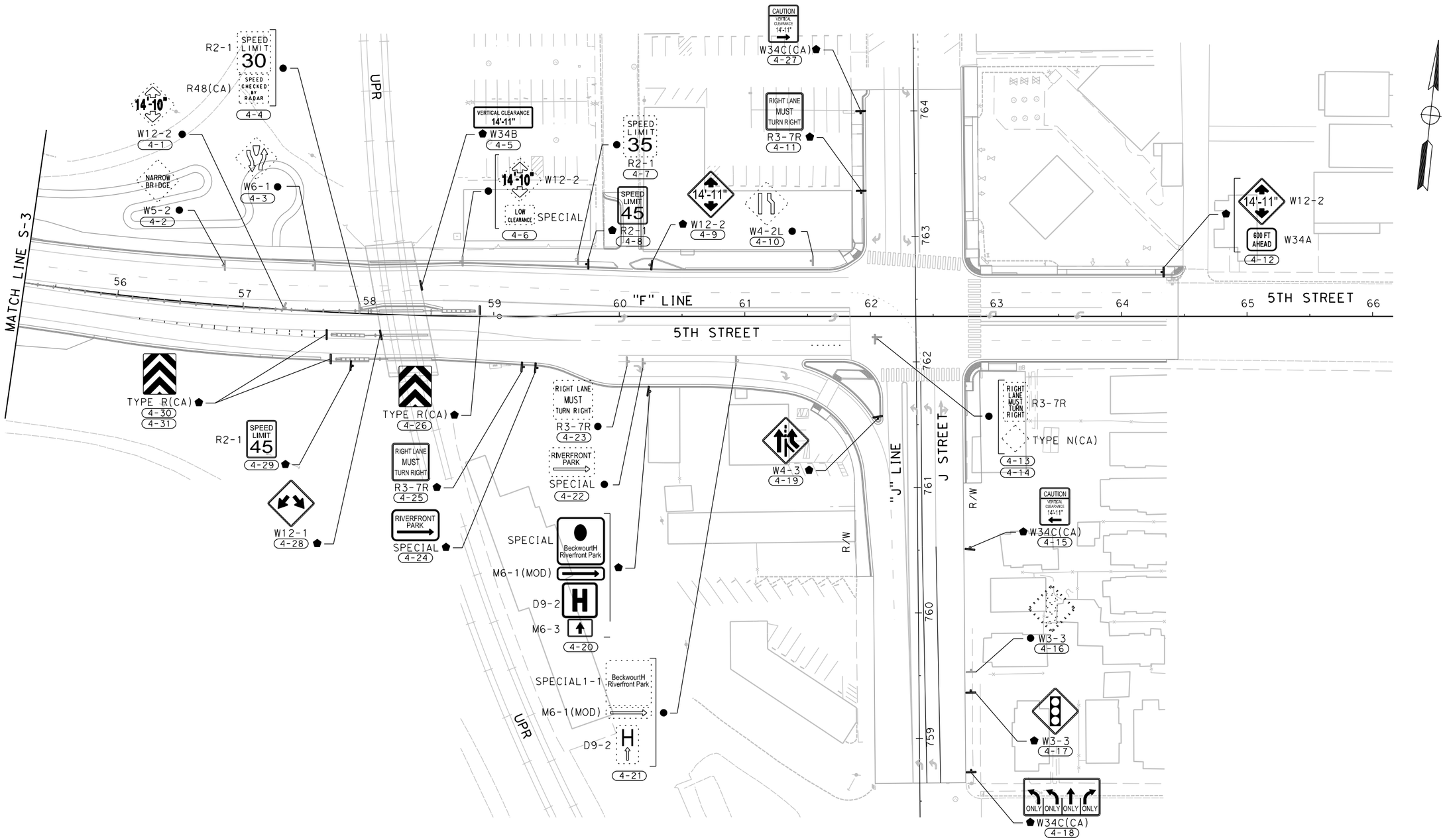

FOR REDUCED PLANS
ORIGINAL SCALE IS IN INCHES
0 1 2 3
ALL DIMENSIONS SHOWN IN FEET
UNLESS OTHERWISE NOTED

8/15/2016

...\51\18580a0004.dgn

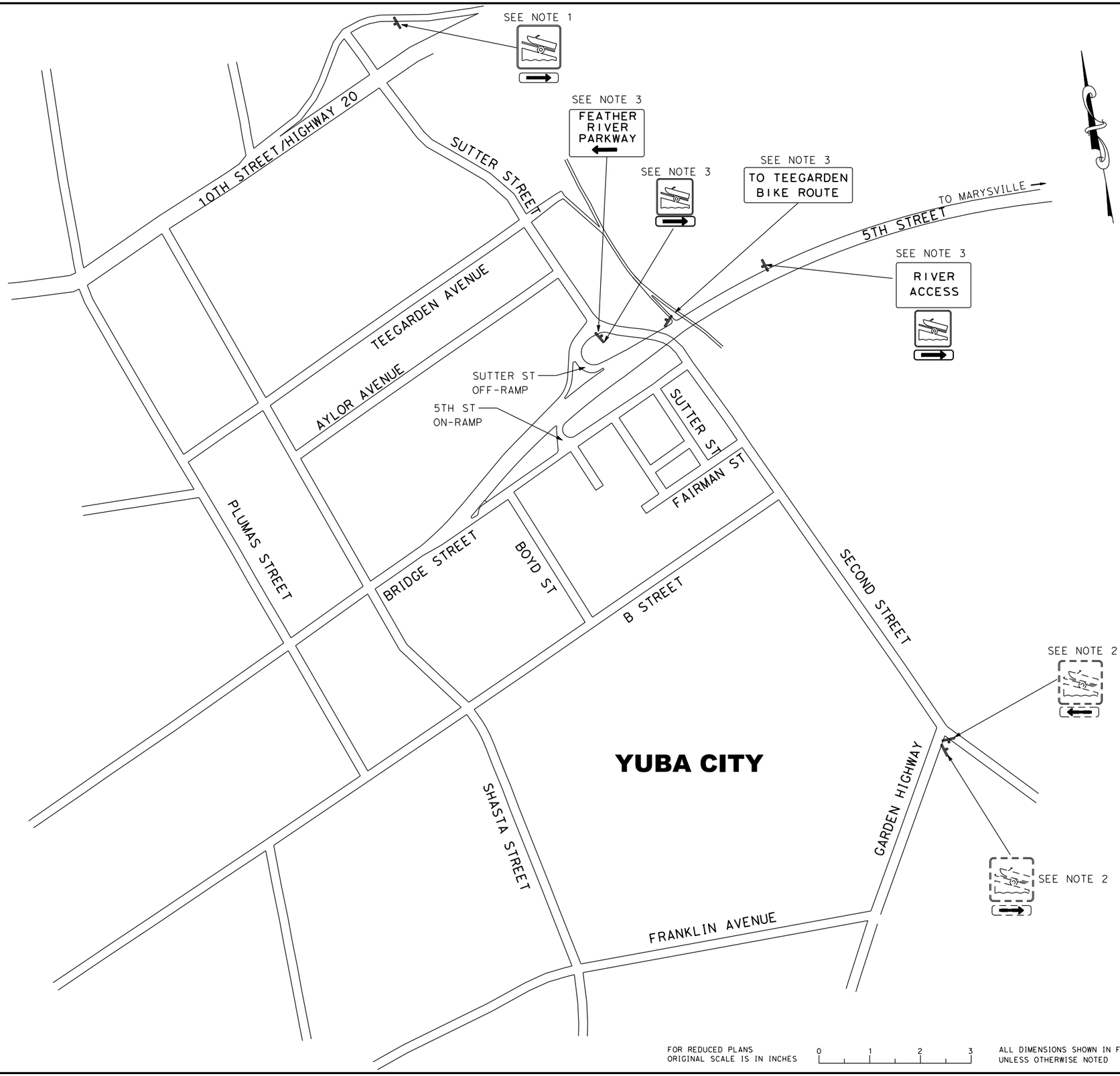

REVISION #	DATE:	DESCRIPTION AND SHEET NO.:	APPROVED BY:	DATE:

REGISTERED PROFESSIONAL ENGINEER
JOSE J OSTDIEK
No. 65334
Exp. 8/30/17
CIVIL
STATE OF CALIFORNIA

NOTES:

1. REPLACE EXISTING SIGN PANEL
2. EXISTING SIGN TO REMAIN
3. INSTALL SIGN

FEATHER RIVER PARKWAY AND YUBA CITY BOAT RAMP ACCESS SIGNS

S-5

FOR REDUCED PLANS ORIGINAL SCALE IS IN INCHES

0 1 2 3

ALL DIMENSIONS SHOWN IN FEET UNLESS OTHERWISE NOTED

PLAN SCALE: NO SCALE
PROFILE SCALE:
HORIZ:
VERT:

CONTRACT NO: **17-XX**
DESIGNED: N. DONNELLY
DRAWN: A. LEE
CHECKED:
RECORD DRAWING:
DATE:

DOKKEN ENGINEERING
110 BLUE RAVINE ROAD #200
FOLSOM, CA 95630
PHONE: (916) 858-0642
FAX: (916) 985-1845

CITY OF **YUBA CITY**

5TH STREET BRIDGE REPLACEMENT
SIGN PLAN

SHEET NO.
OF
215

8/15/2016

...\511\1858a0005.dgn

NOTES:

1. REPLACE EXISTING SIGN PANEL
2. EXISTING SIGN TO REMAIN
3. INSTALL SIGN

REVISION #	DATE	DESCRIPTION AND SHEET NO.	APPROVED BY	DATE

REGISTERED PROFESSIONAL ENGINEER
NATHAN J. DONNELLY
No. 64459
Exp. 6/30/17
CIVIL
STATE OF CALIFORNIA

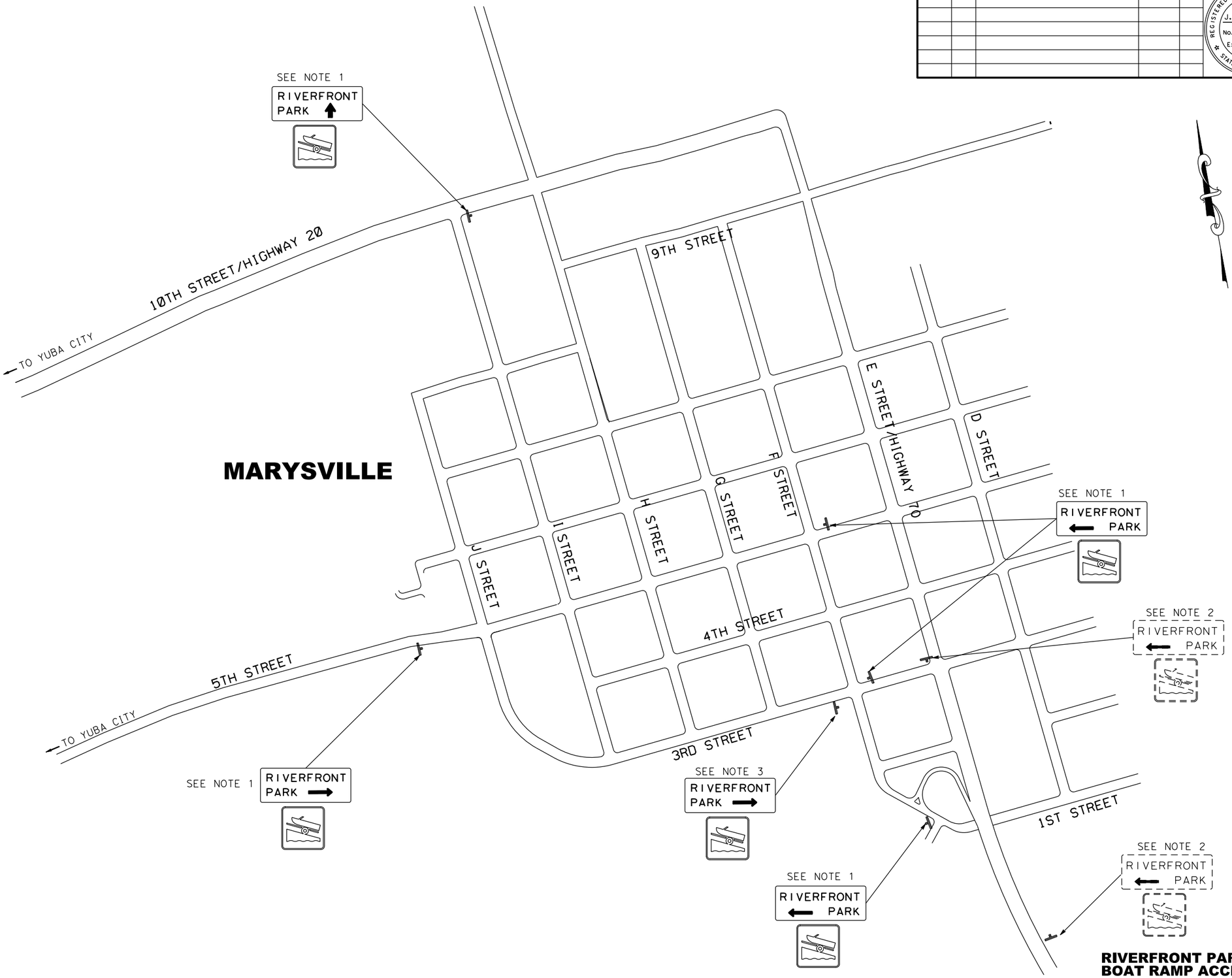

MARYSVILLE

RIVERFRONT PARK AND BOAT RAMP ACCESS

S-6

FOR REDUCED PLANS
ORIGINAL SCALE IS IN INCHES

0 1 2 3

ALL DIMENSIONS SHOWN IN FEET
UNLESS OTHERWISE NOTED

PLAN SCALE: 1"=500'
PROFILE SCALE:
HORIZ:
VERT:

CONTRACT NO: 17-XX
DESIGNED: N. DONNELLY
DRAWN: A. LEE
CHECKED:
RECORD DRAWING: DATE:

DOKKEN ENGINEERING
110 BLUE RAVINE ROAD #200
FOLSOM, CA 95630
PHONE: (916) 858-0642
FAX: (916) 858-0643

CITY OF YUBA CITY

5TH STREET BRIDGE REPLACEMENT

SIGN PLAN

SHEET NO.
OF
215

8/15/2016

...\511\1858a0006.dgn

REVISION #	DATE:	DESCRIPTION AND SHEET NO.:	APPROVED BY:	DATE:

REGISTERED PROFESSIONAL ENGINEER
JOSE J. OSTDIEK
No. 65334
Exp. 9/30/17
CIVIL
STATE OF CALIFORNIA

PLAN SCALE: 1"=40'
PROFILE SCALE:
HORIZ:
VERT:

CONTRACT NO:
DESIGNED: J. OSTDIEK
DRAWN: J. RODRIGUEZ
CHECKED: DATE:
RECORD DRAWING:
17-XX

DOKKEN ENGINEERING
110 BLUE RAVINE ROAD #200
FOLSOM, CA 95630
PHONE: (916) 858-0642
FAX: (916) 985-1865

CITY OF
YUBA CITY

5TH STREET BRIDGE REPLACEMENT

SIGN PLAN

SHEET NO.
OF
215

ROADSIDE SIGN QUANTITIES

SHEET NO.	SIGN NO.	SIGN	METAL POST	STRAP & SADDLE	TWO POST	RESET	REMOVE & SALVAGE	FURNISH & INSTALL	EXISTING LOCATION	PROPOSED LOCATION (APPROX)
S-1	1-1	R3-2					1		"F" 19+80 LT	
	1-2	W4-1					1		"F" 21+02 LT	
		R2-1								
	1-3	W4-1(Rt)	1					1		"F" 24+20 LT
	1-4	D9-2	1					1		"B" 523+57 RT
		G33-1(CA)								
	1-5	D9-2					1		"B" 523+51 RT	
		G33-1(CA)								
	1-6	D3-1				1			"F1" 122+60 RT	
		D3-1								
	1-7	W12-2		1				1		"F1" 120+42 RT
	1-8	W4-3					1		"F" 19+85 RT	
	1-9	R3-2					1		"F" 17+90 RT	
S-2	2-1	SPECIAL			1			1		"F" 27+31 LT
	2-2	SPECIAL					1		"F" 28+18 LT	
	2-3	R2-1					1		"F" 29+21 LT	
	2-4	W1-8	1					1		"F4" 429+43 RT
	2-5	W1-8	1					1		"F4" 429+79 RT
	2-6	W1-8	1					1		"F4" 430+15 RT
	2-7	G1-7(CA)					1		"F" 30+10 LT	
	2-8	W1-8					1		"F4" 428+95 RT	
	2-9	W1-8					1		"F4" 429+15 RT	
	2-10	W1-8					1		"F4" 429+40 RT	
	2-11	W1-8					1		"F4" 429+63 RT	
	2-12	W1-8					1		"F4" 429+93 RT	
	2-13	W1-8					1		"F4" 430+27 RT	
	2-14	W4-6	1					1		"S" 636+48 LT
	2-15	R1-2					1		"F4" 427+30 LT	
	2-16	R5-1					1		"F2" 232+23 LT	
		R5-1a								
	2-17	R3-1					1		"S" 637+21 LT	
	2-18	R1-1					1		"F4" 427+19 RT	
	2-19	W4-1(Rt)					1		"S" 636+39 LT	
	2-20	R3-2					1		"S" 636+28 LT	
	2-21	R4-7	1					1		"S" 634+79 LT
		TYPE N								
	2-22	G1-7(CA)	1					1		"F" 30+48 LT
	2-23	W8-5					1		"F" 31+69 LT	
	2-24	W13-2	1					1		"F" 33+61 LT
	2-25	W11-2					1			"S" 633+97 RT
		R4-7								
		TYPE N(CA)								
	2-26	SPECIAL	1					1		"S" 633+73 RT
		SPECIAL								
	2-27	SPECIAL					1		"S" 633+60 RT	
		SPECIAL								
	2-28	D11-1					1		"F" 34+88 RT	
		G33-1(CA)								
		D11-1								
		G33-1(CA)								
	2-29	R4-7	1					1		"S" 632+35 LT
		TYPE N								
	2-30	G11-4.1(CA)	1					1		"F" 34+97 RT
	2-31	W11-2					1		"S" 631+61 RT	
		D16-7P								
	2-32	R26(CA)					1		"S" 631+17 RT	
	A SUBTOTAL=		12	1	1	1	26	14		

ROADSIDE SIGN QUANTITIES

SHEET NO.	SIGN NO.	SIGN	METAL POST	STRAP & SADDLE	TWO POST	RESET	REMOVE & SALVAGE	FURNISH & INSTALL	EXISTING LOCATION	PROPOSED LOCATION (APPROX)
S-2	2-33	W11-2					1		"S" 631+08 LT	
		D16-7P								
	2-34	D3-1					1		"B" 533+67 RT	
		D3-1								
		R1-1								
	2-35	R26(CA)					1		"S" 632+04 RT	
	2-36	R4-7					1		"S" 632+24 LT	
		TYPE N(CA)								
	2-37	W34B(CA)					1		"S" 632+29 RT	
	2-38	G8-22(CA)					1		"S" 633+35 LT	
	2-39	G8-22(CA)					1		"S" 633+41 LT	
	2-40	W34B(CA)					1		"S" 633+47 LT	
	2-41	SPECIAL					1		"S" 633+58 LT	
	2-42	W6-3					1		"F" 33+24 RT	
		R2-1								
	2-43	W4-1	1					1		"F" 26+82 RT
	2-44	W13-2	1					1		"S" 530+62 LT
	2-45	W12-2					1		"S" 530+25 LT	
		W34A(CA)								
	2-46	W13-2					1		"F" 31+34 LT	
	2-47	W9-2					1		"F3" 327+69 LT	
		W8-5								
	2-48	W34B(CA)					1		"F3" 326+54 RT	
	2-49	G8-1(CA)			1			1		"B" 527+28 LT
	2-50	G8-1(CA)					1		"B" 527+38 LT	
	2-51	R1-1					1		"B" 526+54 LT	
	2-52	W5-2					1		"B" 31+60 RT	
	2-53	R81(CA)	1					1		"B" 531+41 LT
		R81B(CA)								
		D11-1								
		G33-1(CA)								
		R81A(CA)								
	2-54	R81(CA)	1					1		"B" 531+25 RT
		R81B(CA)								
		D11-1								
		G33-1(CA)								
		R81A(CA)								
	2-55	W4-1	1					1		"B" 531+25 RT
	2-56	R1-1				1				"B" 531+25 RT
		D3-1								
		D3-1								
	2-57	R1-1				1				"B" 531+25 RT
		D3-1								
		D3-1								
S-3	3-1	G10(CA)		1				1		"F" 38+49 RT
	3-2	G10(CA)					1		"F" 38+75 RT	
	3-3	G10(CA)		1				1		"F" 38+52 LT
	3-4	G10(CA)					1		"F" 39+66 RT	
	3-5	R61(MOD)(CA)	1					1		
	3-6	G11-4.1(CA)	1					1		
	3-7	R44A(CA)	1					1		
		SPECIAL								
		D11-1								
		G33-1(CA)								
	B SUBTOTAL=		8	2	1	2	19	11		

SQ-1

FOR REDUCED PLANS
ORIGINAL SCALE IS IN INCHES

0 1 2 3

ALL DIMENSIONS SHOWN IN FEET
UNLESS OTHERWISE NOTED

8/15/2016

...\511\1858oc001.dgn

REVISION #	DATE:	DESCRIPTION AND SHEET NO.:	APPROVED BY:	DATE:

REGISTERED PROFESSIONAL ENGINEER
JOSE J. OSTDIEK
No. 65334
Exp. 9/30/17
CIVIL
STATE OF CALIFORNIA

ROADSIDE SIGN QUANTITIES

SHEET NO.	SIGN NO.	SIGN	METAL POST	STRAP & SADDLE	TWO POST	RESET	REMOVE & SALVAGE	FURNISH & INSTALL	EXISTING LOCATION	PROPOSED LOCATION (APPROX)
S-3	3-8	R44A(CA)					1			
		SPECIAL								
		D11-1								
		G33-1(CA)								
	3-9	SPECIAL		1				1		
	3-10	SR56(CA)					1			
		SPECIAL								
	3-11	R61(MOD)(CA)		1				1		
	3-12	TYPE R(CA)	1					1		
S-4	4-1	W12-2					1		"F" 57+33 LT	
	4-2	W5-2					1		"F" 56+83 LT	
	4-3	W6-1					1		"F" 57+56 LT	
	4-4	R2-1					1		"F" 57+93 LT	
		R48(CA)								
	4-5	W34B	1					1		"F" 58+42 LT
	4-6	W12-2					1		"F" 58+75 LT	
		SPECIAL								
	4-7	R2-1					1		"F" 59+67 LT	
	4-8	R2-1	1					1		"F" 59+75 LT
	4-9	W12-2	1					1		"F" 60+26 LT
	4-10	W4-2L					1		"F" 61+54 LT	
	4-11	R3-7R	1					1		"J" 763+37 LT
	4-12	W12-2	1					1		"F" 64+34 LT
		W34A								
	4-13	R3-7R					1		"F" 62+04 RT	
		TYPE N(CA)								
	4-14	R3-7R					1		"F" 62+04 RT	
		TYPE N(CA)								
	4-15	W34C(CA)		1				1		"J" 760+50 RT
	4-16	W3-3					1		"J" 759+52 RT	
	4-17	W3-3	1					1		"J" 759+36 RT
	4-18	W34C(CA)	1					1		"J" 758+73 RT
	4-19	W4-3	1					1		"J" 761+56 LT
	4-20	SPECIAL		1				1		"F" 60+23 RT
		D9-2								
		M6-3								
		M6-1(MOD)								
	4-21	SPECIAL1-1					1		"F" 60+93 RT	
		D9-2(MOD)								
		M6-1(MOD)								
	4-22	SPECIAL					1		"F" 60+19 RT	
	4-23	R3-7R					1		"F" 60+06 RT	
	4-24	SPECIAL	1					1		"F" 59+33 RT
	4-25	R3-7R	1					1		"F" 59+22 RT
	4-26	TYPE R(CA)	1					1		"F" 58+89 LT
	4-27	W34C	1					1		"J" 764+00 LT
	4-28	W12-1	1					1		"F" 58+11 RT
	4-29	R2-1	1					1		"F" 57+88 RT
	4-30	TYPE R(CA)	1					1		"F" 57+68 RT
	4-31	TYPE R(CA)	1					1		"F" 57+72 RT
		C SUBTOTAL=	17	4	0	0	15	21		
		B SUBTOTAL=	8	2	1	2	19	11		
		A SUBTOTAL=	12	1	1	1	26	14		
		TOTAL=	37	7	2	3	60	46		

FOR REDUCED PLANS
ORIGINAL SCALE IS IN INCHES

0 1 2 3

ALL DIMENSIONS SHOWN IN FEET
UNLESS OTHERWISE NOTED

SQ-2

PLAN SCALE: 1"=40'
PROFILE SCALE:
HORIZ:
VERT:

CONTRACT NO: 17-XX
DESIGNED: J. OSTDIEK
DRAWN:
CHECKED: J. RODRIGUEZ
RECORD DRAWING: DATE:

DOKKEN ENGINEERING
110 BLUE RAVINE ROAD #200
FOLSOM, CA 95630
PHONE: (916) 858-0642
FAX: (916) 858-0643

CITY OF YUBA CITY

5TH STREET BRIDGE REPLACEMENT

SIGN PLAN

SHEET NO.
OF
215

8/15/2016

...\511\1858oc002.dgn

REVISION #	DATE:	DESCRIPTION AND SHEET NO.:	APPROVED BY:	DATE:

REGISTERED PROFESSIONAL ENGINEER
MEGAN R. CARTER
No. 75885
Exp. 6/30/18
CIVIL
STATE OF CALIFORNIA

ROADWAY QUANTITIES

LOCATION	HOT MIX ASPHALT (TYPE A)	AGGREGATE BASE CLASS 2	ROADWAY EXCAVATION	ROADWAY EMBANKMENT BACKFILL (N)	IMPORT BORROW	SLURRY SEAL	PULVERIZED ROAD BED	JOINTED PLAIN CONCRETE PAVEMENT	CEMENT TREATED BASE(ROAD-MIXED, CLASS A)
	TON	CY	CY	CY	CY	TON	SY	CY	CY
BRIDGE STREET	2920	4905							
EB ON RAMP	150	255							
FIFTH STREET WEST	4090	5404							
WB OFF RAMP	578	738							
WB ON RAMP	576	936							
FIFTH STREET EAST	2624	2042							4565
J STREET	1117	22							2054
SECOND STREET	1786	3227							
SHASTA STREET						34			
TEMP WB OFF RAMP	220	167					1097		
RIVERFRONT PARKING LOT	2417	1156							
BIKE PATH	59	28							
MUTI-USE PATH		36							
SOCCER COMPLEX DRIVEWAY		277							
LEVEE PATROL ROAD	134	136							
"F" 34+62 TO "F" 34+87								44	
TOTAL =	16,671	19329				34	1097	44	6619

MISC. RIVERFRONT PARK QUANTITIES

LOCATION	PARKING BUMPERS	RSP (No.2 METHOD B)	RSP FABRIC (CLASS 8)
	EA	CY	SY
PP-1	8	21.2	133
PP-2		21.2	133
TOTAL =	8	43	266

DETECTABLE WARNING SURFACE

LOCATION	DETECTABLE WARNING SURFACE
	SF
WEST OF BRIDGE	437
EAST OF BRIDGE	223
TOTAL =	660

1 EARTHWORK FLOW BY STAGE (ALL VALUES IN CY)

STAGE	LINE/ BASIN	ROADWAY EXCAVATION	ROADWAY EXCAVATION (SUBGRADE)	ROADWAY EMBANKMENT BACKFILL (N)	EARTHWORK TOTAL PER STAGE (N) **	ADDITIONAL EMBANKMENT REQUIRED	EXCESS MATERIAL (N)
1	'S' LINE	714	433	2			
SUBTOTAL		714	433	2	(1145)		1145
2	'F2' LINE	19	0	2869			
	'J' LINE	0	235	24			
	'F' LINE	2584	2092	224			
	'S' LINE	562	931	48			
SUBTOTAL		3165	3257	3165	(3257)		3257
3	'F4' LINE	18	328	10243			
	'F' LINE	745	1890	2198			
	'J' LINE	3	273	0			
SUBTOTAL		766	2491	12441	9184	4782*	
4	'F' LINE	11205	4272	8257			
	'F2' LINE	134	213	2815			
	'J' LINE	0	20	0			
SUBTOTAL		11338	4505	11072	(4771)		4771
6	'F' LINE	9218	2508	7299			
	'F1' LINE	0	325	53			
	'S' LINE	4488	607	70			
	'J' LINE	0	532	20			
	'F3' LINE	1294	145	286			
SUBTOTAL		15000	4117	7708	(11410)		11410
7	'B' LINE	141	2761	14			
	'F' LINE	0	179	1			
	'J' LINE	0	311	6			
SUBTOTAL		141	3251	21	(3371)		3371
8	'S' LINE	76	500	124			
SUBTOTAL		76	500	124	(451)		451
TOTAL =		49755		34534	(15221)	4782*	20003

* ADDITIONAL EMBANKMENT REQUIRED FOR STAGE 3 CAN BE ACQUIRED FROM GRADING WORK IDENTIFIED IN FUTURE STAGES THAT CAN BE ACCOMPLISHED EARLIER, SEE STAGE CONSTRUCTION SHEETS.

** EARTHWORK TOTAL PER STAGE IS DETERMINED BY THE EQUATION:
ROADWAY EMBANKMENT BACKFILL - [ROADWAY EXCAVATION X SHRINKAGE FACTOR]

SHRINKAGE FACTOR IS 0.9 FOR ROADWAY EXCAVATION

FOR REDUCED PLANS
ORIGINAL SCALE IS IN INCHES
0 1 2 3
ALL DIMENSIONS SHOWN IN FEET
UNLESS OTHERWISE NOTED

PLAN SCALE:
PROFILE SCALE:
HORIZ:
VERT:

CONTRACT NO: 17-XX
DESIGNED: M. CARTER
DRAWN: A. LEE
CHECKED:
RECORD DRAWING:
DATE:

DOKKEN ENGINEERING
110 BLUE RAVINE ROAD #200
FOLSOM, CA 95630
PHONE: (916) 858-0642
FAX: (916) 985-1845

CITY OF YUBA CITY

5TH STREET BRIDGE REPLACEMENT

QUANTITIES

Q-1

SHEET NO. 1 OF 215

8/15/2016

...\511\1858pa001.dgn

REMOVE CONCRETE

LOCATION	CURB AND GUTTER AND SIDEWALK	CURB AND SIDEWALK	CURB AND GUTTER	CURB	SIGN FOUNDATION
	LF	SQYD	LF	LF	EA
"F" 17+86 TO "F" 19+18	132				
"F" 17+86 TO "F" 122+64	523				
"B" 523+23 TO "B" 526+69	380				
"B" 531+17 TO "B" 531+27	55				
"B" 532+06 TO "B" 532+31	70				
"S" 631+68 TO "S" 636+41	500				
"S" 636+80 to "S" 638+38	177				
"S" 637+26 TO "S" 638+38	120				
"F" 45+78 TO "J" 764+35	935				
"F" 60+23 TO "J" 760+57	345				
"J" 764+35 TO "F" 64+36	334				
5th/SUTTER STREET ISLAND		111			
SECOND STREET ISLAND		230			
BRIDGE/SECOND STREET ISLAND		9			
PARK SIDEWALK					
5th/J STREET ISLAND		26			
"F" 19+93 TO "S" 637+26			1420		
"F" 19+25 TO "F" 31+83			1340		
"F" 33+13 TO "B" 533+45			1030		
"B" 527+39 TO "F" 33+27			715		
"F3" 326+19 TO "F3" 326+77			72		
"B" 526+84 TO "B" 528+96			240		
"B" 529+57 TO "B" 530+31			88		
"F" 45+77 TO "F" 60+23			617		
"J" 760+57 TO "F" 64+36			303		
"B" 532+31 TO "B" 533+75			165		
"F3" 326+77 TO "F" 33+20				553	
"F" 54+22 TO "F" 58+02				382	
"B" 527+39 TO "B" 533+45				607	
TOTAL =	3580	380	5990	1542	1

REMOVE GUARDRAIL

LOCATION	GUARDRAIL
	LF
"F4" 428+70 TO "F4" 430+14	177
"F" 54+60 TO "F" 54+66	32
"F" 32+72 TO "F" 33+27	57
TOTAL =	266

REMOVE FENCE

LOCATION	FENCE
	LF
"S" 635+80 TO "S" 636+22	45
PARK FENCE	470
TOTAL =	520

REMOVE GATE

LOCATION	GATE
	EA
EAST OF BRIDGE	2
WEST OF BRIDGE	2
TOTAL =	4

REMOVE STOP LOG SYSTEM

LOCATION	SYSTEM
	LF
EAST OF BRIDGE	90
TOTAL =	90

REMOVE BUILDINGS

LOCATION	BUILDINGS
	EA
EAST OF BRIDGE	3
TOTAL =	3

REMOVE HMA DIKE

LOCATION	SECTION
	LF
EAST OF BRIDGE	180
TOTAL =	180

REMOVE BOLLARDS

LOCATION	UNIT
	LF
EAST OF BRIDGE	4
PARK ACCESS ROUTE	66
TOTAL =	70

REMOVE ASPHALT CONCRETE PAVEMENT

LOCATION	UNITS
	SF
"F" 19+17 to "F" 19+25	40
"B"523+86 to "B" 524+83	140
"B" 527+39 to "B" 533+44	8410
"B" 525+58 to "B" 526+32	612
PARK ACCESS ROUTE AND TRAIL	7438
PARKING LOT	46,650
TOTAL =	63,300

REVISION #	DATE:	DESCRIPTION AND SHEET NO.:	APPROVED BY:	DATE:

REGISTERED PROFESSIONAL ENGINEER
MEGAN R. CARTER
No. 75885
Exp. 6/30/18
CIVIL
STATE OF CALIFORNIA

PLAN SCALE:
PROFILE SCALE:
HORIZ:
VERT:

CONTRACT NO: 17-XX
DESIGNED: M. CARTER
DRAWN: A. LEE
CHECKED:
RECORD DRAWING:
DATE:

DOKKEN ENGINEERING
110 BLUE RAVINE ROAD #200
FOLSOM, CA 95630
PHONE: (916) 858-0642
FAX: (916) 985-1845

CITY OF YUBA CITY

5TH STREET BRIDGE REPLACEMENT

QUANTITIES

SHEET NO. 1 OF 215

Q-2

FOR REDUCED PLANS ORIGINAL SCALE IS IN INCHES 0 1 2 3

ALL DIMENSIONS SHOWN IN FEET UNLESS OTHERWISE NOTED

8/15/2016

...\511\1858pa002.dgn

REVISION #	DATE:	DESCRIPTION AND SHEET NO.:	APPROVED BY:	DATE:

REGISTERED PROFESSIONAL ENGINEER
MEGAN R. CARTER
No. 75885
Exp. 6/30/18
CIVIL
STATE OF CALIFORNIA

CONCRETE BARRIER

STATION	TYPE 60D	TYPE 60C (MOD)	TYPE 60	TYPE 742B (MOD)	TYPE 742 (MOD)	TYPE 60C
	LF	LF	LF	LF	LF	LF
"F" 30+50 TO "F" 32+54			204			
"F" 54+15 TO "F" 55+50			135			
"F4" 430+62 TO "F4" 432+19				158		
"F" 54+15 TO "F" 54+44				30		
"F4" 34+40 TO "F" 34+75					36	
"F" 55+50 TO "F" 57+94						244
"F" 57+94 TO "F" 58+09		15				
"F" 58+44 TO "F" 58+59		15				
"F" 57+97 TO "F" 58+12		15				
"F" 58+01 TO "F" 58+16		15				
"F" 58+09 TO "F" 58+44	35					
"F" 58+13 TO "F" 58+48	35 (2)					
"F" 58+17 TO "F" 58+51	35					
TOTAL =	140	60	339	188	36	244

MISC ROADWAY QUANTITIES

LOCATION	CRASH CUSHION	CHAIN LINK FENCE (TYPE CL-6, VINYL CLAD)	CHAIN LINK FENCE (TYPE CL-6, BREAK-AWAY)	4' CHAIN LINK GATE (TYPE CL-6)	10' CHAIN LINK GATE (TYPE CL-6)
	EA	LF	LF	EA	EA
"F4" 4+02 TO "F" 35+03		163			
"F" 57+45 TO "F" 57+95		110			
"F" 58+35 TO "F" 58+75		40			
"F" 44+41 TO "F" 44+41		108			
QUADGUARD ELITE	4				
"F" 44+02 TO "F" 45+58			164		
"F" 45+62 TO "F" 47+52			191		
"F" 47+56 TO "F" 49+51			195		
"F" 49+54 TO "F" 51+41			188		
"F" 51+45 TO "BP" 8+09			149		
"F" 42+56 TO "F" 44+41			214		
"F" 45+59				1	
"F" 47+52				1	
"F" 49+51				1	
"F" 51+41				1	
"F" 44+41					2
TOTAL =	4	421	1,101	4	2

PLAN SCALE:
PROFILE SCALE:
HORIZ:
VERT:

CONTRACT NO: 17-XX
DESIGNED: M. CARTER
DRAWN: A. LEE
CHECKED:
RECORD DRAWING: DATE:

DOKKEN ENGINEERING
110 BLUE RAVINE ROAD #200
FOLSOM, CA 95630
PHONE: (916) 858-0642
FAX: (916) 985-1845

CITY OF YUBA CITY

5TH STREET BRIDGE REPLACEMENT

QUANTITIES

SHEET NO. 1 OF 215

Q-3

8/15/2016

...\511\1858p0003.dgn

FOR REDUCED PLANS
ORIGINAL SCALE IS IN INCHES
0 1 2 3
ALL DIMENSIONS SHOWN IN FEET
UNLESS OTHERWISE NOTED

REVISION #	DATE:	DESCRIPTION AND SHEET NO.:	APPROVED BY:	DATE:

REGISTERED PROFESSIONAL ENGINEER
MEGAN R. CARTER
No. 75885
Exp. 6/30/18
CIVIL
STATE OF CALIFORNIA

MINOR CONCRETE (DRIVEWAYS)

LOCATION	MINOR CONCRETE	CLASS 2 AB
	CY	CY
0	20.45	20.45
1	3.75	3.75
2	14.4	14.4
3	7.6	7.6
4	6.75	6.75
5	3.7	3.7
6	4.17	4.17
7	3.0	3.0
8	7.33	7.33
9	5.26	5.26
10	7.22	7.22
11	3.3	3.3
12	2.76	2.76
13	6.0	6.0
14	3.26	3.26
15	9.65	9.65
TOTAL =	109	109

MINOR CONCRETE

STATION	CURB AND GUTTER	SIDEWALK	GUTTER
	CY	CY	CY
"F" 17+86 TO A1-LINE	30.9	32.4	
A1-LINE TO A2-LINE	34.6	33.9	
A2-LINE TO A3-LINE	12.9	19	
A3-LINE TO S-LINE	13.8	19.2	
"F" 17+86 TO SUTTER END	88.6	95.8	
EAST SIDE OF S-LINE	40.9	43.9	
SECOND AND BRIDGE CURB ISLAND	3.2		
WEST SIDE OF S-LINE / PATH	27.4	102	
"F4" CURB ISLAND	6.5		
F1-LINE GORE	6.5		
"F" 59+93 TO "F" 58+59 (MEDIAN)	4.1		
"F" 58+00 TO "F" 58+45 WB	2.8		
"F" 54+15 TO "J" 764+17 WB	51.7	150.6	
"F" 54+15 TO "J" 758+64	45	12.4	
"J" 761+03 TO "F" 64+36	14.2	13.3	
"F" 64+50 TO "J" 764+35	19.1	19.2	
MARYSVILLE CURB ISLAND	9.9		
OLIVE ST/ENTRANCE	5.4	7.76	1
PARK (PP-1)	7	1	
PARK (PP-2)	7	1	
TOTAL =	432	550	1

MINOR CONCRETE (CONTINUED)

STATION	CURB RAMP	TEXTURED PAVING	RETAINING CURB	6" CONCRETE CURB
	CY	SF	CY	CY
WEST OF "A1" LINE	1.51		0.33	
EAST OF "A1" LINE	0.44		0.30	
WEST OF "A2" LINE	1.88		0.57	
EAST OF "A2" LINE	2.25		0.76	
WEST OF "A3" LINE	1.77		0.63	
EAST OF "A3" LINE	4.11		1.34	
SOUTH WEST INTERSECTION OF BRIDGE AND SECOND ST	2.84		0.46	
SOUTH EAST OF SECOND STREET	1.11			
SECOND AND BRIDGE CURB ISLAND	1.85			0.5
NORTH EAST OF "S" LINE	2.42		0.44	
SUTTER AND F2	0.80			
"F4" CURB ISLAND	1.54			0.53
"F4" AND "S" LINE	2.42			2.84
SOUTH WEST OF "F" AND "J" LINE	1.19	20	0.39	
MARYSVILLE CURB ISLAND	2.27			1.45
SOUTH EAST OF "F" AND "J"	2.33	42	0.89	
NORTH EAST OF "F" AND "J"	3.00	43	0.46	
NORTH WEST OF "F" AND "J"	1.48	35.8	0.49	
5TH STREET MARYSVILLE	0.42		0.23	
F-LINE MEDIAN				15.56
F1-LINE GORE				2.91
TOTAL =	36	141	7.3	24

PLAN SCALE:
PROFILE SCALE:
HORIZ:
VERT:

CONTRACT NO: 17-XX
DESIGNED: M. CARTER
DRAWN: A. LEE
CHECKED:
RECORD DRAWING:
DATE:

DOKKEN ENGINEERING
110 BLUE RAVINE ROAD #200
FOLSOM, CA 95630
PHONE: (916) 858-0642
FAX: (916) 858-0643

CITY OF YUBA CITY

5TH STREET BRIDGE REPLACEMENT

QUANTITIES

SHEET NO. 1 OF 215

Q-4

8/15/2016

...\511\1858pa004.dgn

FOR REDUCED PLANS ORIGINAL SCALE IS IN INCHES 0 1 2 3

ALL DIMENSIONS SHOWN IN FEET UNLESS OTHERWISE NOTED

REVISION #	DATE:	DESCRIPTION AND SHEET NO.:	APPROVED BY:	DATE:

REGISTERED PROFESSIONAL ENGINEER
NATHAN J. DONNELLY
No. 64459
Exp. 6/30/17
CIVIL
STATE OF CALIFORNIA

LEGEND:

- PIER COLUMN
- IRRIGATION BERM
- CHAIN LINK FENCE (TYPE CL-6, BREAK-AWAY)
- 4' CHAIN LINK GATE (TYPE CL-6)

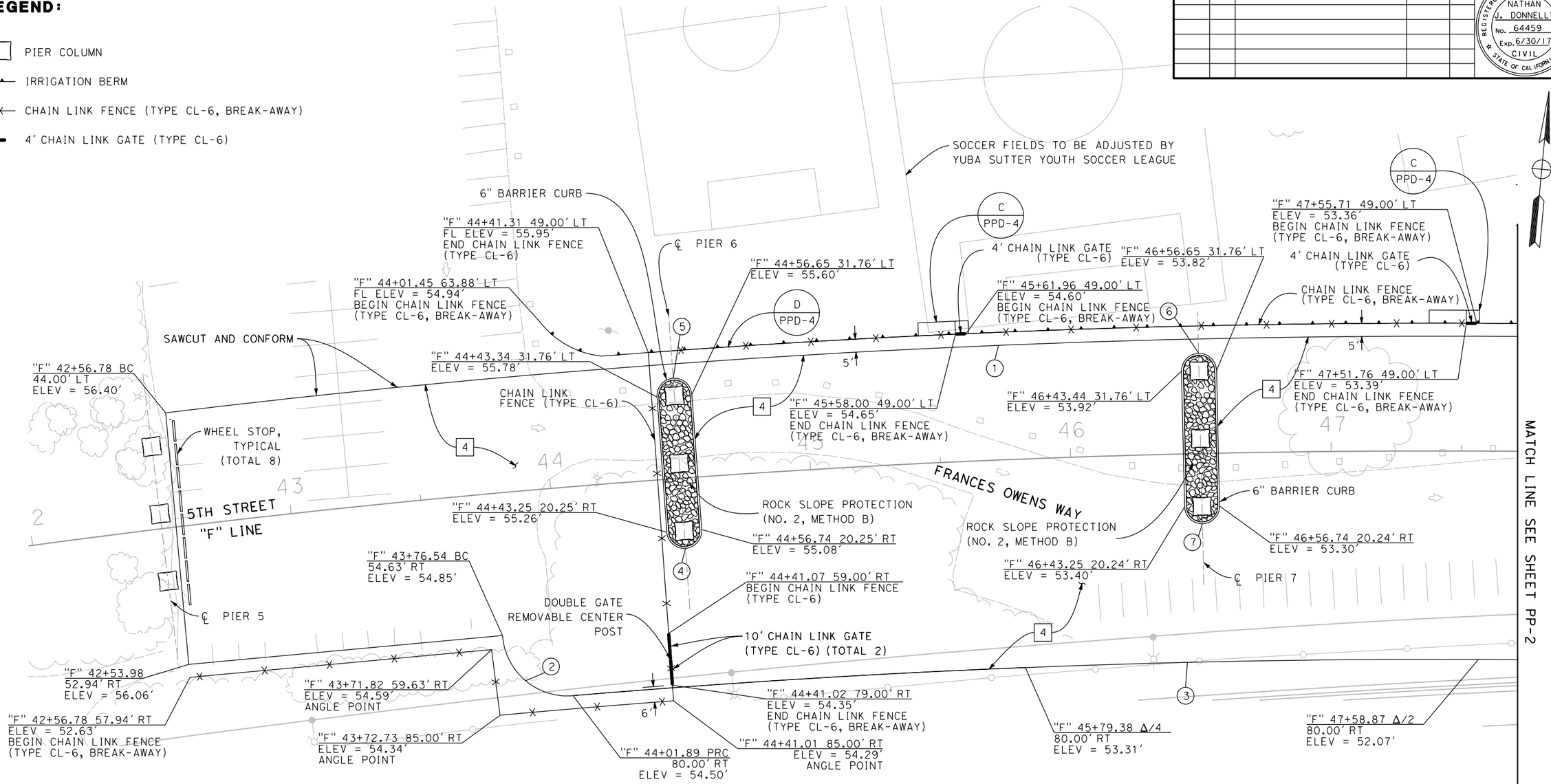

CURVE DATA				
No	RADIUS (ft)	DELTA	TANGENT (ft)	LENGTH (ft)
1	4070.00	13° 29' 52"	481.64	958.82
2	25.00	89° 33' 55"	24.81	39.08
3	3946.00	10° 06' 14"	348.83	695.85
4	6.71	180° 00' 02"		21.07
5	6.71	180° 00' 00"		21.07
6	6.71	180° 00' 00"		21.07
7	6.71	180° 00' 00"		21.07

NOTES:

1. FOR IRRIGATION BERM DETAIL SEE SHEET PPD-3
2. FOR BREAK-AWAY FENCE DETAIL SEE SHEET PPD-4
3. FOR STRUCTURAL SECTION INFORMATION SEE SHEET X-1
4. FOR DOUBLE GATE REMOVABLE CENTER POST, SEE CALTRANS STANDARD PLAN DETAIL RSP A85A.
5. FOR 4' CHAIN LINK GATE DETAIL, SEE WALK GATE DETAILS ON CALTRANS STANDARD PLAN DETAIL RSP A85A.
6. FOR YUBA SUTTER YOUTH SOCCER LEAGUE COORDINATION, CONTACT DOUG HEACOCK AT (530) 822-5642.

FOR REDUCED PLANS
ORIGINAL SCALE IS IN INCHES
0 1 2 3
ALL DIMENSIONS SHOWN IN FEET
UNLESS OTHERWISE NOTED

PLAN SCALE: 1"=20'
PROFILE SCALE:
HORIZ:
VERT:

CONTRACT NO: 17-XX
DESIGNED: N. DONNELLY
DRAWN: E. ESPINOZA
CHECKED:
RECORD DRAWING:
DATE:

DOKKEN ENGINEERING
110 BLUE RAVINE ROAD #200
FOLSOM, CA 95630
PHONE: (916) 858-0642
FAX: (916) 858-0643

CITY OF
YUBA CITY

5TH STREET BRIDGE REPLACEMENT

PARK PLAN

SHEET NO.
PP-1
OF
215

8/15/2016

...\51\1858t001.dgn

CURVE DATA				
No	RADIUS (ft)	DELTA	TANGENT (ft)	LENGTH (ft)
8	25.00	90° 42′ 30"	25.31	29.58
9	25.00	68° 51′ 25"	17.13	30.05
10	25.00	74° 47′ 37"	19.11	32.64
11	25.00	90° 36′ 40"	25.27	39.54
12	25.00	90° 56′ 26"	25.41	39.68
13	25.00	86° 06′ 02"	23.35	37.57

CURVE DATA				
No	RADIUS (ft)	DELTA	TANGENT (ft)	LENGTH (ft)
14	6.71	180° 00′ 00"		21.07
15	6.71	180° 00′ 00"		21.07
16	6.71	180° 00′ 00"		21.07
17	6.71	180° 00′ 00"		21.07
18	6.00	180° 00′ 00"		18.85
19	6.00	180° 00′ 00"		18.85

REVISION #	DATE:	DESCRIPTION AND SHEET NO.:	APPROVED BY:	DATE:

REGISTERED PROFESSIONAL ENGINEER
NATHAN J. DONNELLY
No. 64459
Exp. 6/30/17
CIVIL
STATE OF CALIFORNIA

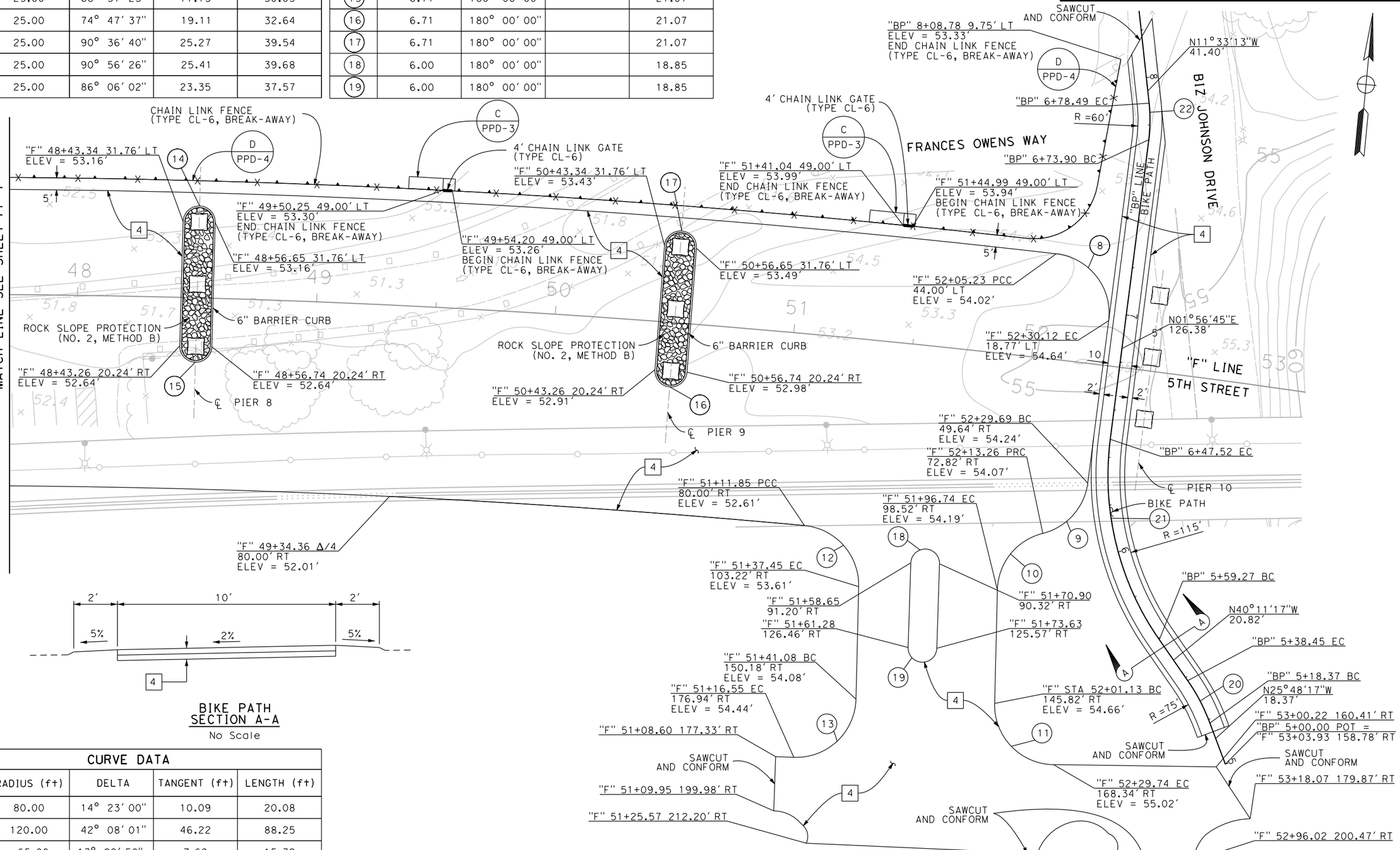

BIKE PATH
SECTION A-A
No Scale

CURVE DATA				
No	RADIUS (ft)	DELTA	TANGENT (ft)	LENGTH (ft)
20	80.00	14° 23′ 00"	10.09	20.08
21	120.00	42° 08′ 01"	46.22	88.25
22	65.00	13° 29′ 58"	7.69	15.32

FOR REDUCED PLANS ORIGINAL SCALE IS IN INCHES 0 1 2 3

ALL DIMENSIONS SHOWN IN FEET UNLESS OTHERWISE NOTED

PP-2

1" = PLAN SCALE:
PROFILE SCALE:
HORIZ:
VERT:

CONTRACT NO: 17-XX
DESIGNED: N. DONNELLY
DRAWN: E. ESPINOZA
CHECKED:
RECORD DRAWING:
DATE:

DOKKEN ENGINEERING
110 BLUE RAVINE ROAD #200
FOLSOM, CA 95630
PHONE: (916) 858-0642
FAX: (916) 985-1845

CITY OF YUBA CITY

5TH STREET BRIDGE REPLACEMENT

PARK PLAN

SHEET NO.
OF
215

8/15/2016

...\51\1858r0002.dgn

REVISION #	DATE:	DESCRIPTION AND SHEET NO.:	APPROVED BY:	DATE:

REGISTERED PROFESSIONAL ENGINEER
NATHAN J. DONNELLY
No. 64459
Exp. 6/30/17
CIVIL
STATE OF CALIFORNIA

LEGEND:

- TYPE I ARROW
- TYPE IV ARROW
- TYPE VII ARROW

NOTES:

1. RESTRIPING OF SOCCER FIELDS #17 AND #18 WITH OPPOSITE DIMENSIONS TO BE DONE BY OTHERS. MAINTAIN A MINIMUM DISTANCE OF 25' FROM PARKING LOT EDGE OF PAVEMENT TO SOCCER FIELD STRIPING.
2. UNLESS OTHERWISE NOTED AS, USE 4" WHITE THERMOPLASTIC.
3. ALL PAVEMENT MARKINGS TO BE THERMOPLASTIC.
4. PARKING STALLS TO BE DIMENSIONED PER MARYSVILLE CITY STANDARD DETAILS, STANDARD DETAIL 601 OFF STREET PARKING LAYOUT.
5. FOR QUANTITIES, SEE SHEET PDQ-1.

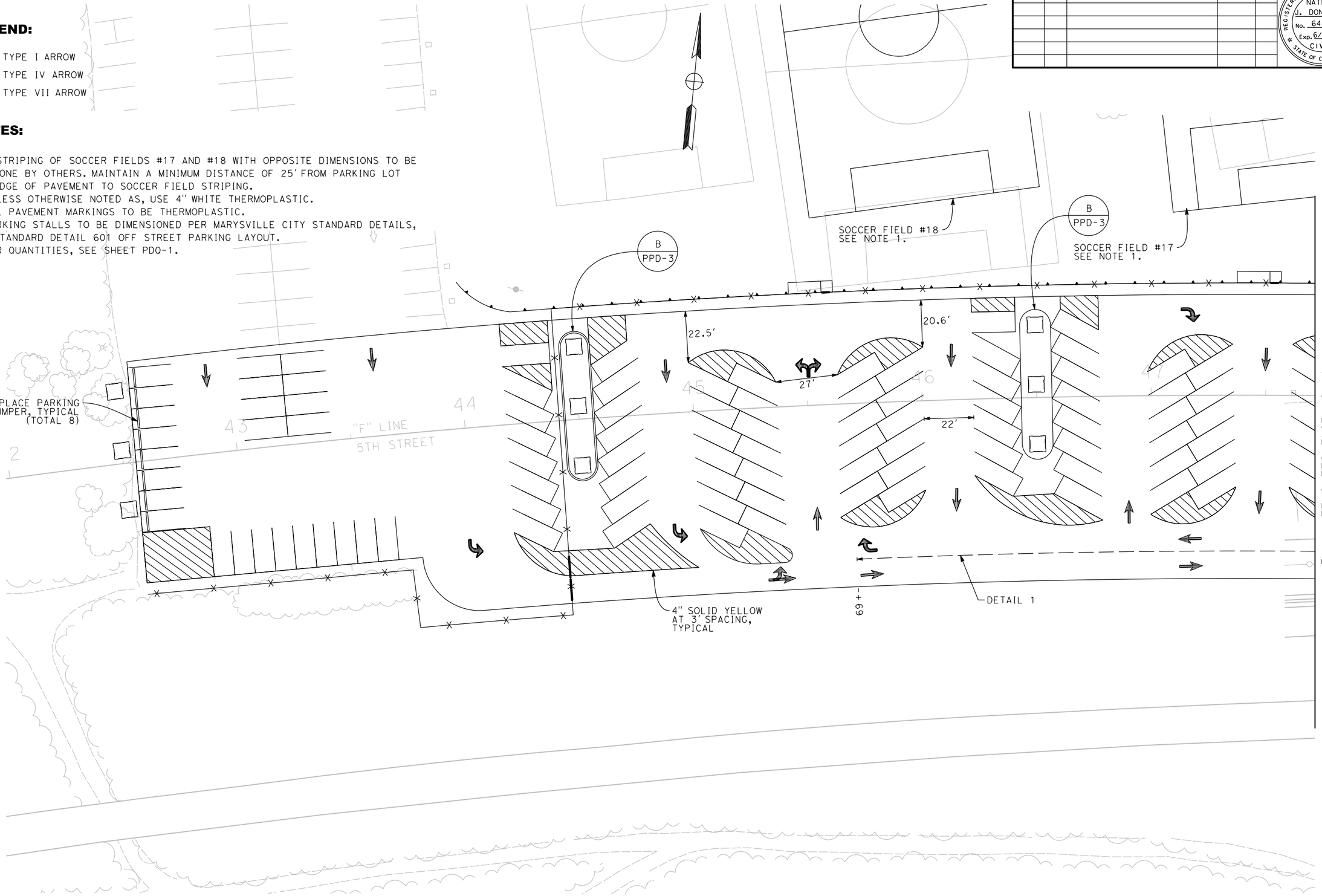

PPD-1

FOR REDUCED PLANS
ORIGINAL SCALE IS IN INCHES
0 1 2 3
ALL DIMENSIONS SHOWN IN FEET
UNLESS OTHERWISE NOTED

PLAN SCALE: 1"=20'
PROFILE SCALE:
HORIZ:
VERT:

CONTRACT NO: 17-XX
DESIGNED: N. DONNELLY
DRAWN: E. ESPINOZA
CHECKED:
RECORD DRAWING: DATE:

DOKKEN ENGINEERING
110 BLUE RAVINE ROAD #200
FOLSOM, CA 95630
PHONE: (916) 858-0642
FAX: (916) 985-1845

CITY OF YUBA CITY

5TH STREET BRIDGE REPLACEMENT

PARK DETAILS

SHEET NO.
OF
215

8/15/2016

...\511\1858tb001.dgn

REVISION #	DATE:	DESCRIPTION AND SHEET NO.:	APPROVED BY:	DATE:

REGISTERED PROFESSIONAL ENGINEER
NATHAN J. DONNELLY
No. 64459
Exp. 6/30/17
CIVIL
STATE OF CALIFORNIA

MATCH LINE SEE SHEET PP-1

B
PPD-3

B
PPD-3

23.5'

22.5'

24'

48 49 50 51 52 53

"F" LINE
5TH STREET

BIZ JOHNSON DRIVE

DETAIL 1

4" SOLID YELLOW
AT 3' SPACING,
TYPICAL

DETAIL 1

12 +

BIKE TRAIL

FOR REDUCED PLANS
ORIGINAL SCALE IS IN INCHES

0 1 2 3

ALL DIMENSIONS SHOWN IN FEET
UNLESS OTHERWISE NOTED

PPD-2

1" = 20'
PLAN SCALE:
PROFILE SCALE:
HORIZ:
VERT:

CONTRACT NO: **17-XX**
DESIGNED: N. DONNELLY
DRAWN: E. ESPINOZA
CHECKED:
RECORD DRAWING:
DATE:

DOKKEN ENGINEERING
110 BLUE RAVINE ROAD #200
FOLSOM, CA 95630
PHONE: (916) 858-0642
FAX: (916) 858-0643

CITY OF
YUBA CITY

5TH STREET BRIDGE REPLACEMENT

PARK DETAILS

SHEET NO.
OF
215

8/15/2016

...\511\858tb002.dgn

REVISION #	DATE:	DESCRIPTION AND SHEET NO.:	APPROVED BY:	DATE:

REGISTERED PROFESSIONAL ENGINEER
NATHAN J. DONNELLY
No. 64459
Exp. 6/30/17
CIVIL
STATE OF CALIFORNIA

PLAN SCALE:
PROFILE SCALE:
HORIZ:
VERT:

CONTRACT NO: 17-XX
DESIGNED: N. DONNELLY
DRAWN: E. ESPINOZA
CHECKED:
RECORD DRAWING:
DATE:

DOKKEN ENGINEERING
110 BLUE RAVINE ROAD #200
FOLSOM, CA 95630
PHONE: (916) 858-0642
FAX: (916) 858-0643

CITY OF YUBA CITY

5TH STREET BRIDGE REPLACEMENT

PARK DETAILS

SHEET NO.
OF
215

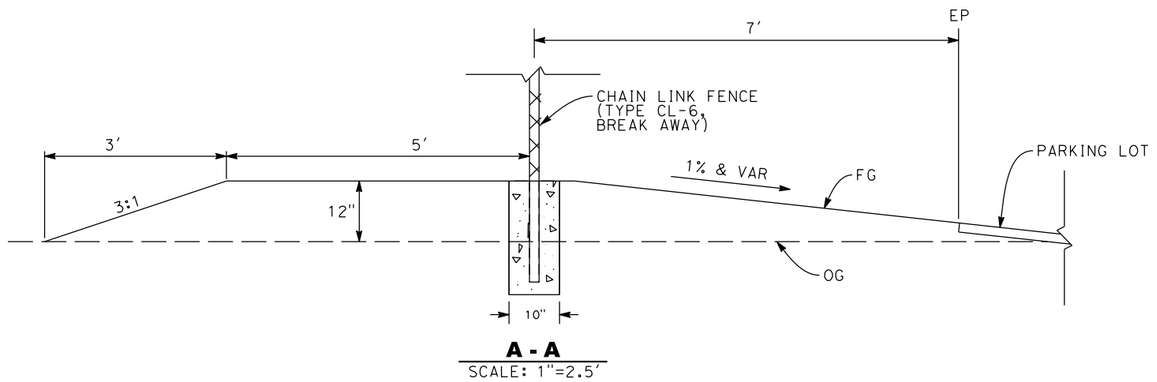

A - A
SCALE: 1"=2.5'

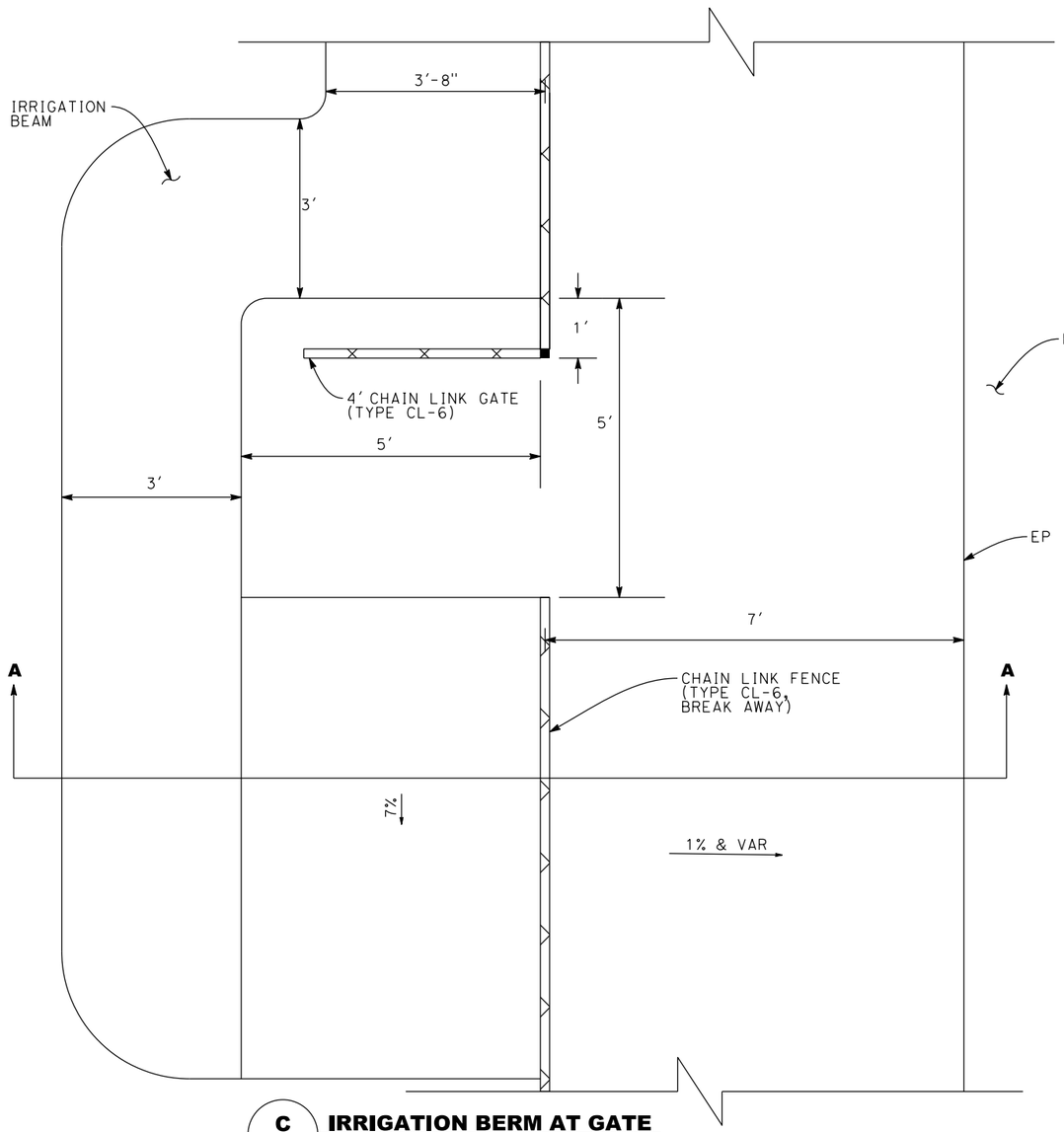

C IRRIGATION BERM AT GATE
SCALE: 1"=2.5'

NOTES:

1. FABRIC SIDE TO BE ON THE DOWNSTREAM SIDE OF THE POST
2. FOR DETAILS NOT SHOWN SEE CALTRANS STANDARD PLAN DETAIL RSP A85.
3. TERMINAL/CORNER POSTS TO BE 2.375 IN. DIAMETER
4. INTERMEDIATE POSTS TO BE 1.875 IN. DIAMETER
5. GATE POSTS TO BE 4 IN. DIAMETER
6. TENSION WIRE TO BE 7 GAUGE FOR BOTH TOP AND BOTTOM
7. CHAIN LINK TO BE 11 GAUGE 2 IN. MESH WITH TWISTED TOP SALVAGE

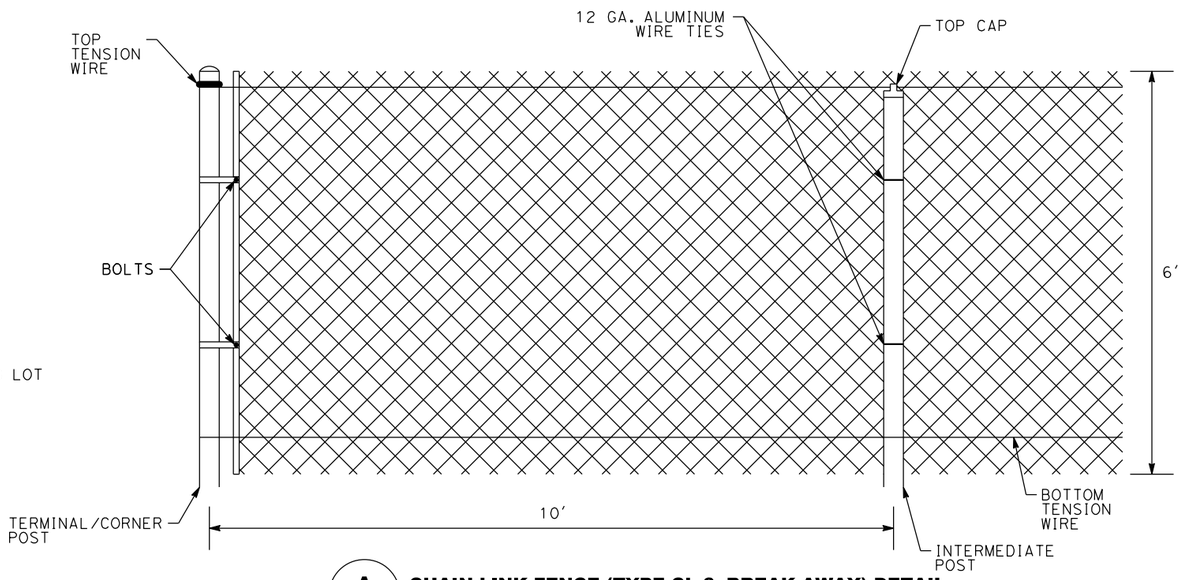

A CHAIN LINK FENCE (TYPE CL-6, BREAK-AWAY) DETAIL
NO SCALE

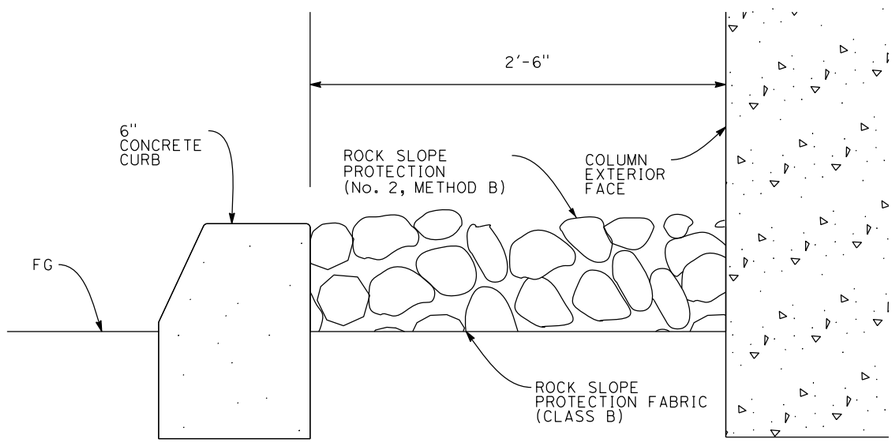

B COLUMN BARRIER DETAIL
NO SCALE

PPD-3

FOR REDUCED PLANS
ORIGINAL SCALE IS IN INCHES
0 1 2 3
ALL DIMENSIONS SHOWN IN FEET
UNLESS OTHERWISE NOTED

8/15/2016
...\511\1858+b003.dgn

REVISION #	DATE:	DESCRIPTION AND SHEET NO.:	APPROVED BY:	DATE:

REGISTERED PROFESSIONAL ENGINEER
MATTHEW N. GRIGGS
No. 54168
Exp. 12/31/16
CIVIL
STATE OF CALIFORNIA

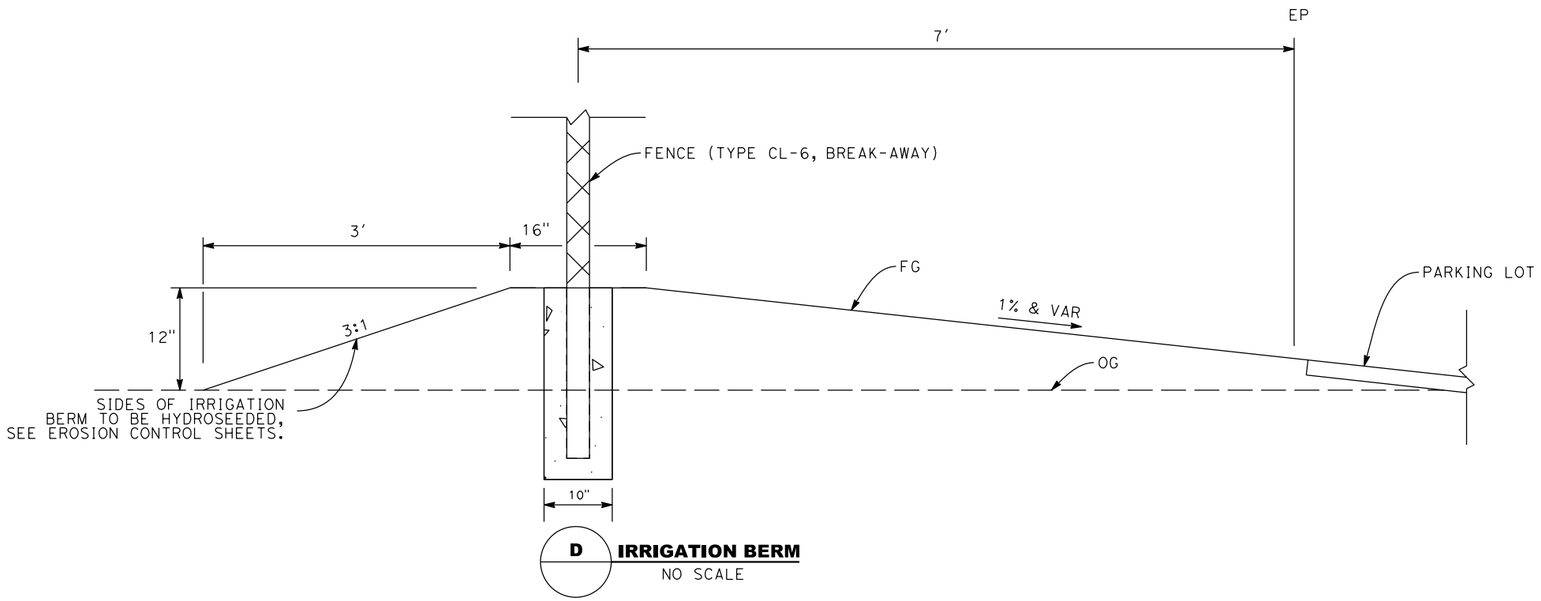

D IRRIGATION BERM
NO SCALE

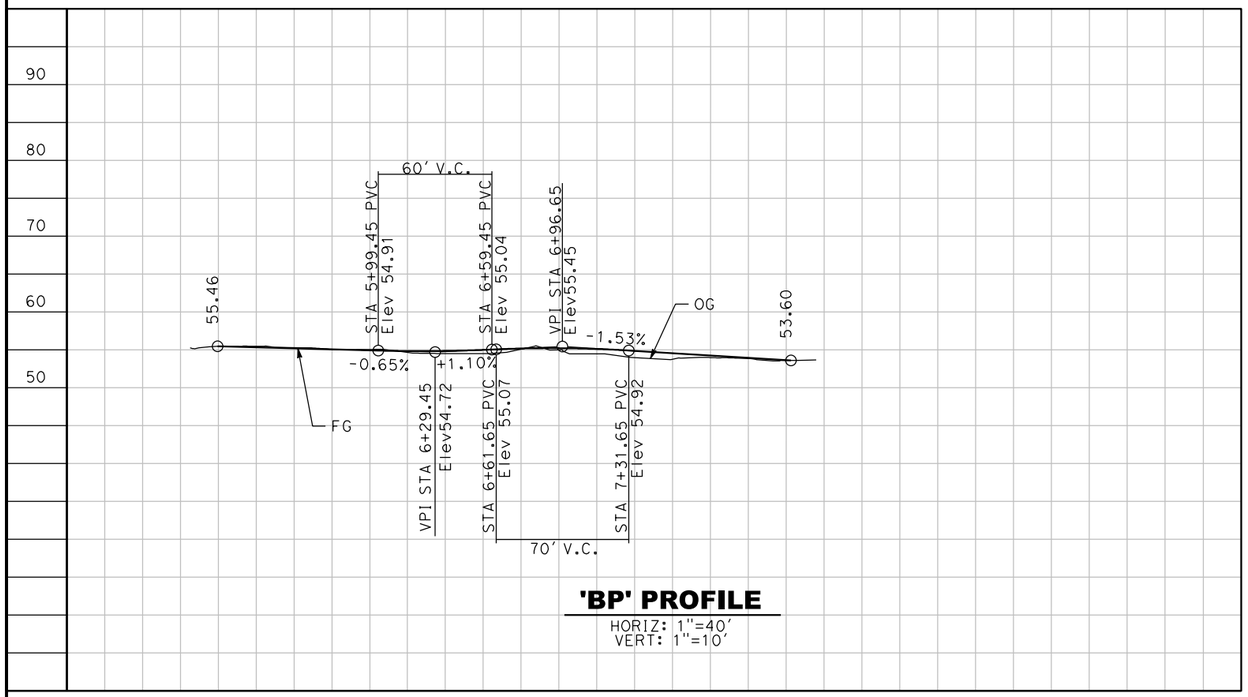

'BP' PROFILE
HORIZ: 1"=40'
VERT: 1"=10'

PLAN SCALE:
PROFILE SCALE:
HORIZ: 1"=40'
VERT: 1"=10'

CONTRACT NO: 17-XX
DESIGNED:
DRAWN:
CHECKED:
RECORD DRAWING:
DATE:

DOKKEN ENGINEERING
110 BLUE RAVINE ROAD #200
FOLSOM, CA 95630
PHONE: (916) 858-0642
FAX: (916) 858-0643

CITY OF YUBA CITY

5TH STREET BRIDGE REPLACEMENT

PARK DETAILS

SHEET NO.
OF
215

PPD-4

8/15/2016

...\51\1858b004.dgn

FOR REDUCED PLANS
ORIGINAL SCALE IS IN INCHES
0 1 2 3
ALL DIMENSIONS SHOWN IN FEET
UNLESS OTHERWISE NOTED

REVISION #	DATE:	DESCRIPTION AND SHEET NO.:	APPROVED BY:	DATE:

REGISTERED PROFESSIONAL ENGINEER
MEGAN R. CARTER
No. 75885
Exp. 6/30/18
CIVIL
STATE OF CALIFORNIA

AREA 1
4 TREES
15 SHRUBS

AREA 5
6 TREES
25 SHRUBS

FEATHER RIVER

PROPOSED BRIDGE

"F" LINE
5TH STREET

AREA 2
17 TREES
53 SHRUBS

AREA 6
11 TREES
34 SHRUBS

(E) 5TH STREET BRIDGE

EXISTING BRIDGE
TO BE REMOVED

(E) UNION PACIFIC RAILROAD BRIDGE

FEATHER RIVER

AREA 3
5 TREES
18 SHRUBS

AREA 4
6 TREES
22 SHRUBS

LEGEND:

AREA BOUNDARY
ZONE 1
ZONE 2

(#) TREE CANOPY SPECIES	ZONE	SHRUB UNDERSTORY SPECIES
BW - BLACK WALNUT VO - VALLEY OAK BE - BOXELDER GW - GOODDING'S WILLOW CW - FREMONT'S COTTONWOOD	1	- NARROW LEAF WILLOW - BUTTONBUSH
	2	- CALIFORNIA BLACKBERRY - CALIFORNIA ROSE - MULE FAT

FOR REDUCED PLANS
ORIGINAL SCALE IS IN INCHES

0 1 2 3

ALL DIMENSIONS SHOWN IN FEET
UNLESS OTHERWISE NOTED

RP-1

PLAN SCALE: 1"=20'
PROFILE SCALE:
HORIZ:
VERT:

CONTRACT NO: **17-XX**
DESIGNED: M. CARTER
DRAWN: A. LEE
CHECKED:
RECORD DRAWING: DATE:

DOKKEN ENGINEERING
110 BLUE RAVINE ROAD #200
FOLSOM, CA 95630
PHONE: (916) 858-0642
FAX: (916) 858-0643

CITY OF
YUBA CITY

5TH STREET BRIDGE REPLACEMENT
5 YEAR RIPARIAN RESTORATION PLAN

SHEET NO.
OF
215

8/15/2016

...\511\1858t1001.dgn

LEGEND

SYMBOL	DESCRIPTION	REMARKS
	DECORATIVE CONCRETE	COLORED CONCRETE W/ 8" SWIRL FINISH DAVIS COLOR: DARK GRAY (IRON OXIDE) 860
	GOLD COLOR, 3" DEPTH.	DECOMPOSED GRANITE
	RIVER COBBLE SET IN CONCRETE	3" TO 8" WIDE COBBLE

NOTES:

1. SHEET TJ-7 FOR ADDITIONAL INFORMATION AND REQUIREMENTS.
2. SEE BOOK FORM SPECIFICATIONS FOR ADDITIONAL DIRECTION FOR INSTALLATION, PRODUCT SPECIFICATIONS AND GENERAL LANDSCAPE REQUIREMENTS.

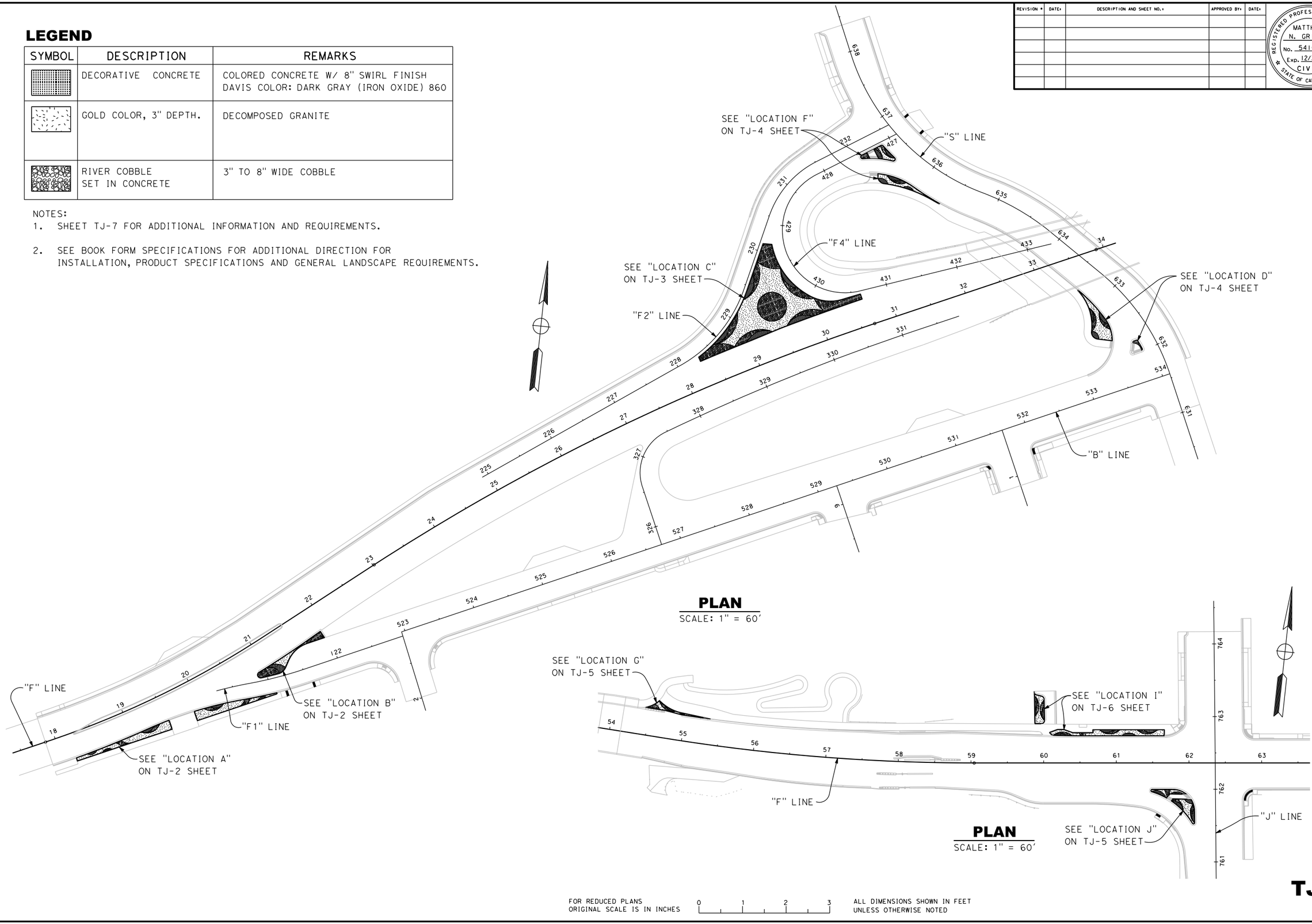

PLAN
SCALE: 1" = 60'

PLAN
SCALE: 1" = 60'

FOR REDUCED PLANS ORIGINAL SCALE IS IN INCHES 0 1 2 3

ALL DIMENSIONS SHOWN IN FEET UNLESS OTHERWISE NOTED

TJ-1

REVISION #	DATE:	DESCRIPTION AND SHEET NO.:	APPROVED BY:	DATE:

REGISTERED PROFESSIONAL ENGINEER
MATTHEW N. GRIGGS
No. 54168
Exp. 12/31/16
CIVIL
STATE OF CALIFORNIA

PLAN SCALE: 1"=60'
PROFILE SCALE:
HORIZ:
VERT:

CONTRACT NO: 17-XX
DESIGNED: M. GRIGGS
DRAWN: K. DANG
CHECKED:
RECORD DRAWING: DATE:

DOKKEN ENGINEERING
110 BLUE RAVINE ROAD #200
FOLSOM, CA 95630
PHONE: (916) 858-0642
FAX: (916) 858-0643

CITY OF YUBA CITY

5TH STREET BRIDGE REPLACEMENT
HARDSCAPE PLAN

SHEET NO. OF 215

8/15/2016

...\511\1858tj001.dgn

REVISION #	DATE	DESCRIPTION AND SHEET NO.	APPROVED BY	DATE

REGISTERED PROFESSIONAL ENGINEER
MATTHEW N. GRIGGS
No. 54168
Exp. 12/31/16
CIVIL
STATE OF CALIFORNIA

PLAN SCALE: 1"=40'
PROFILE SCALE:
HORIZ:
VERT:

CONTRACT NO: 17-XX
DESIGNED: M. GRIGGS
DRAWN: K. DANG
CHECKED:
RECORD DRAWING:
DATE:

DOKKEN ENGINEERING
110 BLUE RAVINE ROAD #200
FOLSOM, CA 95630
PHONE: (916) 858-0642
FAX: (916) 858-0643

CITY OF YUBA CITY

5TH STREET BRIDGE REPLACEMENT

HARDSCAPE PLAN

SHEET NO.
OF
215

TJ-2

	LOCATION B GEOMETRY			
	ALIGNMENT	OFFSET	STATION	RADIUS
①	"F1" LINE	16.01' Lt	121+01.80	14'
②	"F1" LINE	13.59' Lt	121+10.32	14'
③	"F1" LINE	4.85' Lt	121+17.73	14'
④	"F1" LINE	18.56' Lt	121+09.63	20'
⑤	"F1" LINE	16.61' Lt	121+19.68	20'
⑥	"F1" LINE	10.11' Lt	121+27.36	20'

	LOCATION B GEOMETRY			
	ALIGNMENT	OFFSET	STATION	RADIUS
⑦	"F1" LINE	32.70' Lt	121+65.73	20'
⑧	"F1" LINE	34.56' Lt	121+67.73	20'
⑨	"F1" LINE	36.14' Lt	121+69.97	20'
⑩	"F1" LINE	32.71' Lt	121+71.73	14'
⑪	"F1" LINE	36.02' Lt	121+74.25	14'
⑫	"F1" LINE	38.44' Lt	121+77.64	14'

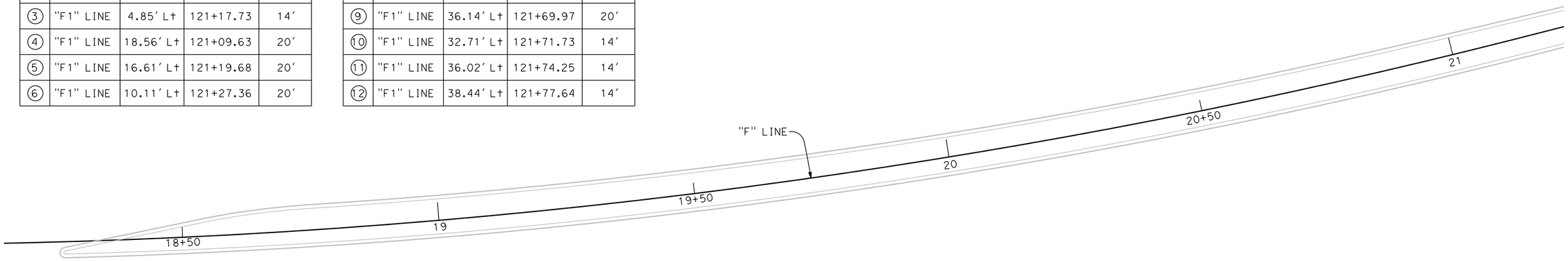

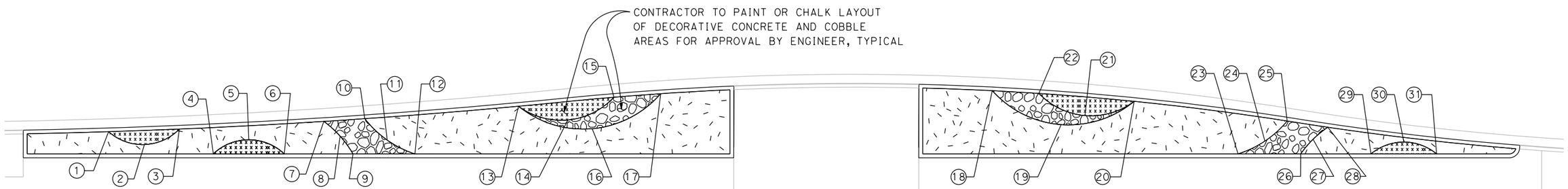

	LOCATION A GEOMETRY			
	ALIGNMENT	OFFSET	STATION	RADIUS
①	"F" LINE	34.85' Rt	18+34.39	10'
②	"F" LINE	37.60' Rt	18+41.09	10'
③	"F" LINE	34.89' Rt	18+47.80	10'
④	"F" LINE	40.02' Rt	18+54.01	10'
⑤	"F" LINE	37.63' Rt	18+60.84	10'
⑥	"F" LINE	40.78' Rt	18+67.36	10'
⑦	"F" LINE	34.97' Rt	18+75.21	20'
⑧	"F" LINE	38.03' Rt	18+78.10	20'
⑨	"F" LINE	41.64' Rt	18+80.29	20'
⑩	"F" LINE	35.00' Rt	18+83.00	20'
⑪	"F" LINE	39.46' Rt	18+86.92	20'
⑫	"F" LINE	42.54' Rt	18+91.94	20'
⑬	"F" LINE	35.08' Rt	19+12.21	14', 20'
⑭	"F" LINE	38.66' Rt	19+21.25	14'
⑮	"F" LINE	35.22' Rt	19+30.34	14'

	LOCATION A GEOMETRY			
	ALIGNMENT	OFFSET	STATION	RADIUS
⑯	"F" LINE	40.84' Rt	19+25.36	20'
⑰	"F" LINE	35.54' Rt	19+39.23	20'
⑱	"F" LINE	43.92' Rt	20+01.31	20'
⑲	"F" LINE	52.64' Rt	20+12.98	20'
⑳	"F" LINE	50.72' Rt	20+27.21	20', 14'
㉑	"F" LINE	51.72' Rt	20+17.67	14'
㉒	"F" LINE	45.94' Rt	20+09.85	14'
㉓	"F" LINE	64.53' Rt	20+44.34	20'
㉔	"F" LINE	63.13' Rt	20+49.72	20'
㉕	"F" LINE	60.18' Rt	20+54.51	20'
㉖	"F" LINE	66.97' Rt	20+55.74	20'
㉗	"F" LINE	64.69' Rt	20+58.52	20'
㉘	"F" LINE	62.99' Rt	20+61.66	20'
㉙	"F" LINE	69.81' Rt	20+68.44	10'
㉚	"F" LINE	68.95' Rt	20+74.82	10'
㉛	"F" LINE	72.59' Rt	20+80.24	10'

LOCATION A
SCALE: 1"=10'

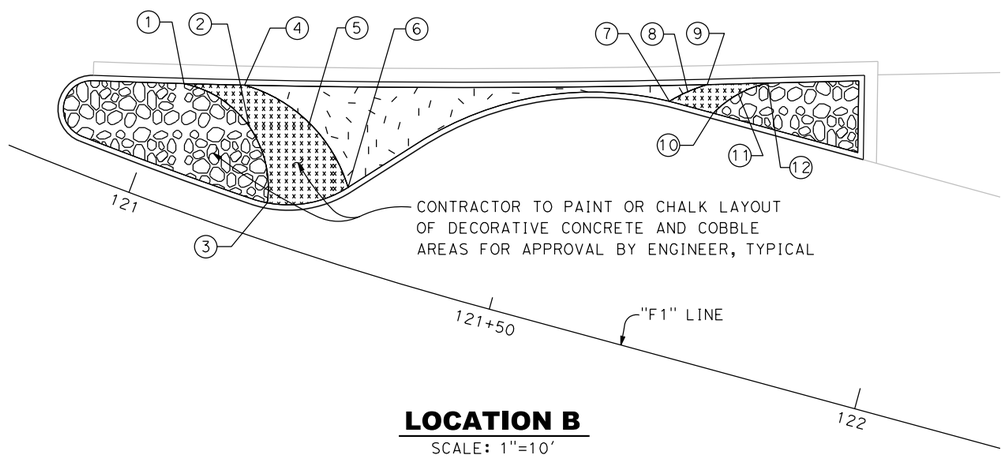

LOCATION B
SCALE: 1"=10'

FOR REDUCED PLANS
ORIGINAL SCALE IS IN INCHES
0 1 2 3
ALL DIMENSIONS SHOWN IN FEET
UNLESS OTHERWISE NOTED

8/15/2016
...\51\1858TJ002.dgn

LOCATION C GEOMETRY				
	ALIGNMENT	OFFSET	STATION	RADIUS
①	"F2" LINE			
②	"F2" LINE			
③	"F2" LINE			
④	"F2" LINE			
⑤	"F2" LINE			
⑥	"F2" LINE			
⑦	"F2" LINE			
⑧	"F2" LINE			
⑨	"F2" LINE			
⑩	"F2" LINE			
⑪	"F2" LINE			
⑫	"F2" LINE			
⑬	"F4" LINE			
⑭	"F4" LINE			
⑮	"F4" LINE			

LOCATION C GEOMETRY				
	ALIGNMENT	OFFSET	STATION	RADIUS
⑯	"F4" LINE			
⑰	"F4" LINE			
⑱	"F4" LINE			
⑲	"F4" LINE			
⑳	"F2" LINE			
㉑	"F2" LINE			
㉒	"F2" LINE			
㉓	"F2" LINE			
㉔	"F2" LINE			
㉕	"F2" LINE			
㊱	"F2" LINE			
㉗	"F2" LINE			
㉘	"F4" LINE			
㉙	"F4" LINE			
㉚	"F4" LINE			

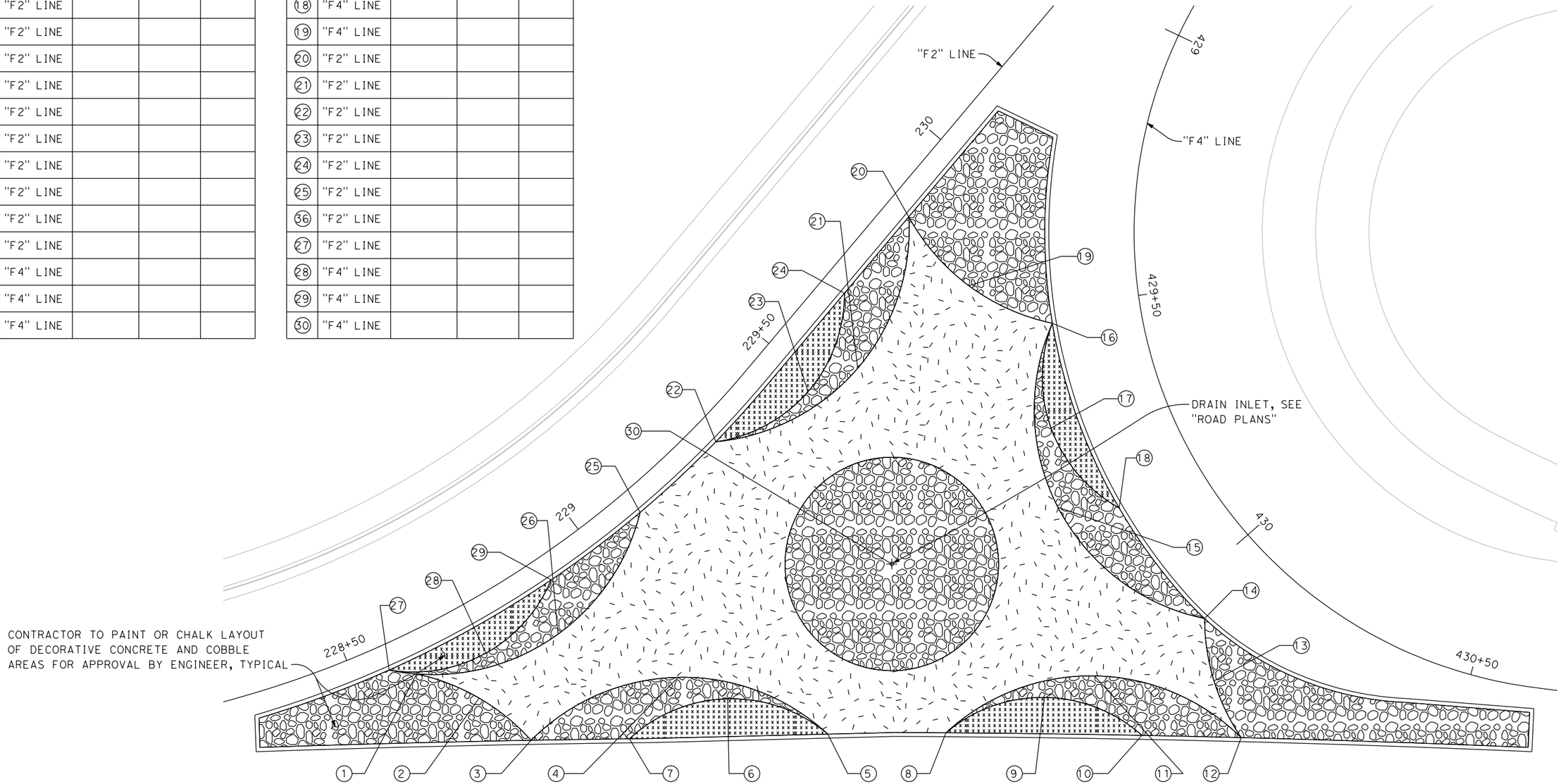

LOCATION C
SCALE: 1"=10'

REVISION #	DATE:	DESCRIPTION AND SHEET NO.:	APPROVED BY:	DATE:

REGISTERED PROFESSIONAL ENGINEER
MATTHEW N. GRIGGS
No. 54168
Exp. 12/31/16
CIVIL
STATE OF CALIFORNIA

PLAN SCALE: 1"=40'
PROFILE SCALE:
HORIZ:
VERT:

CONTRACT NO: 17-XX
DESIGNED: M. GRIGGS
DRAWN: K. DANG
CHECKED:
RECORD DRAWING: DATE:

DOKKEN ENGINEERING
110 BLUE RAVINE ROAD #200
FOLSOM, CA 95630
PHONE: (916) 858-0642
FAX: (916) 858-0643

CITY OF YUBA CITY

5TH STREET BRIDGE REPLACEMENT
HARDSCAPE PLAN

SHEET NO.
OF
215

TJ-3

8/15/2016

...\511\1858TJ003.dgn

FOR REDUCED PLANS
ORIGINAL SCALE IS IN INCHES
0 1 2 3
ALL DIMENSIONS SHOWN IN FEET
UNLESS OTHERWISE NOTED

REVISION #	DATE:	DESCRIPTION AND SHEET NO.:	APPROVED BY:	DATE:

REGISTERED PROFESSIONAL ENGINEER
MATTHEW N. GRIGGS
No. 54168
Exp. 12/31/16
CIVIL
STATE OF CALIFORNIA

PLAN SCALE: 1"=40'
PROFILE SCALE:
HORIZ:
VERT:

CONTRACT NO: **17-XX**
DESIGNED: M. GRIGGS
DRAWN: K. DANG
CHECKED:
RECORD DRAWING: DATE:

DOKKEN ENGINEERING
110 BLUE RAVINE ROAD #200
FOLSOM, CA 95630
PHONE: (916) 858-0642
FAX: (916) 985-1845

CITY OF **YUBA CITY**

5TH STREET BRIDGE REPLACEMENT
HARDSCAPE PLAN

SHEET NO.
OF **215**

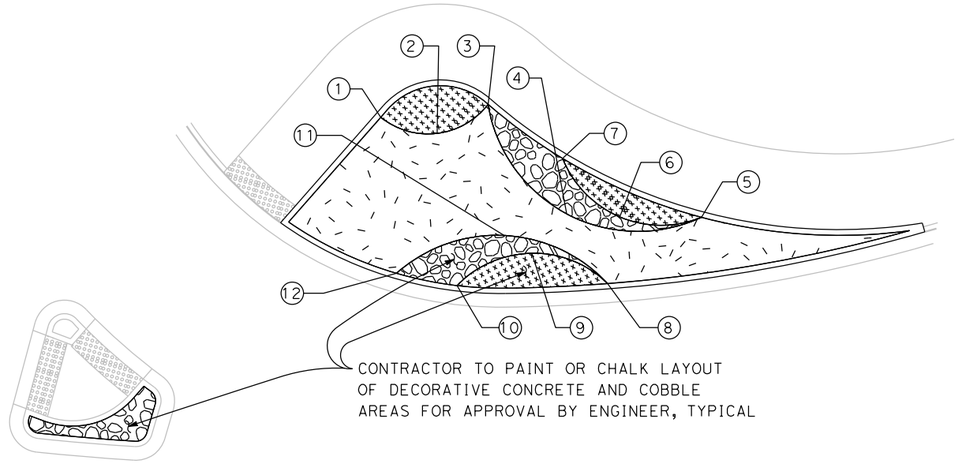

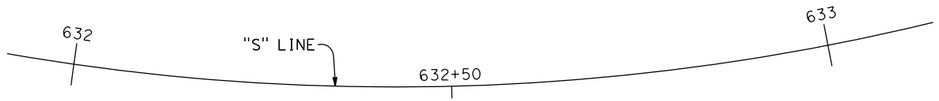

LOCATION D
SCALE: 1"=10'

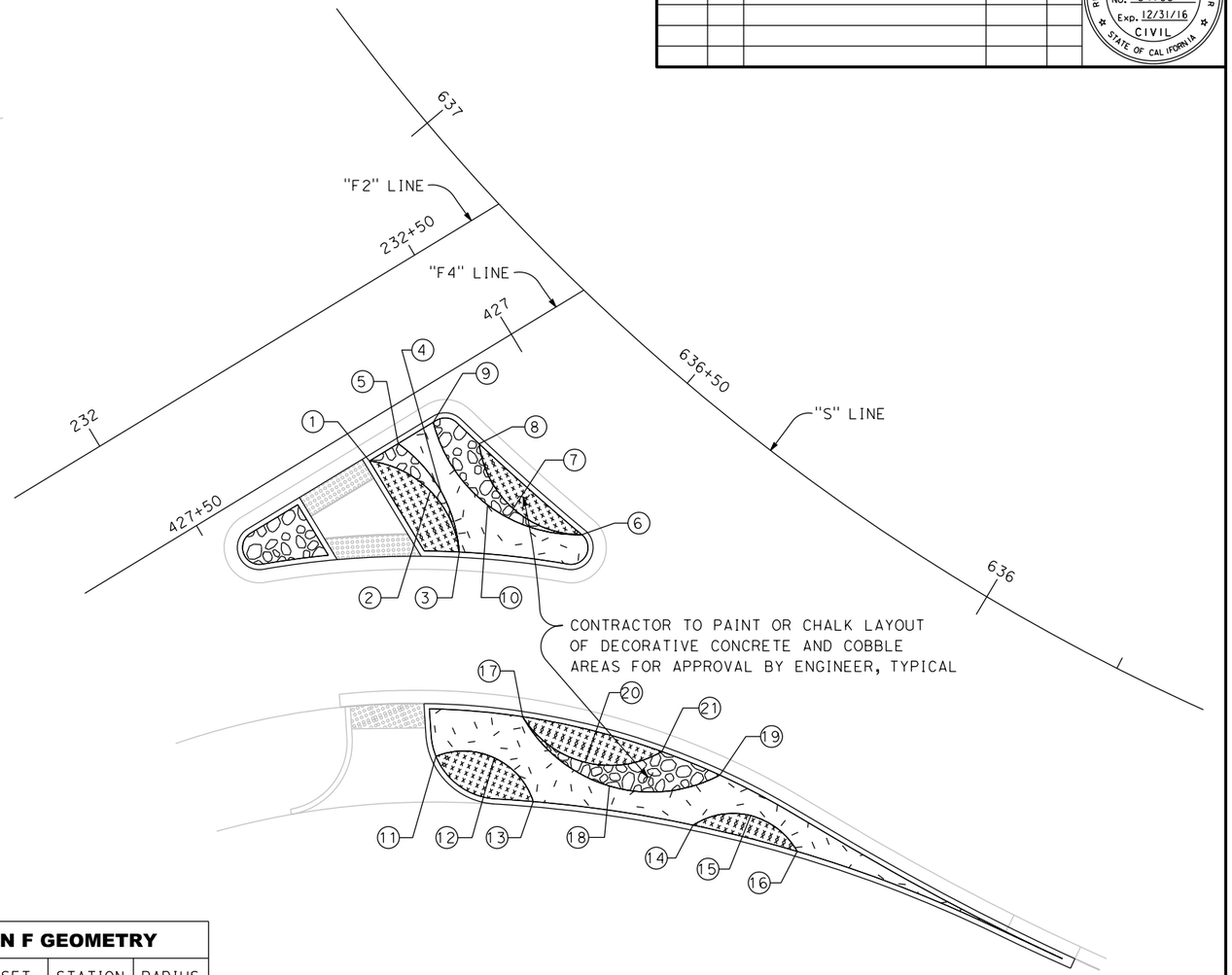

LOCATION F
SCALE: 1"=10'

LOCATION D GEOMETRY

	ALIGNMENT	OFFSET	STATION	RADIUS
1	"S" LINE			
2	"S" LINE			
3	"S" LINE			
4	"S" LINE			
5	"S" LINE			
6	"S" LINE			
7	"S" LINE			
8	"S" LINE			
9	"S" LINE			
10	"S" LINE			
11	"S" LINE			
12	"S" LINE			

LOCATION F GEOMETRY

	ALIGNMENT	OFFSET	STATION	RADIUS
1	"S" LINE			
2	"S" LINE			
3	"S" LINE			
4	"S" LINE			
5	"S" LINE			
6	"S" LINE			
7	"S" LINE			
8	"S" LINE			
9	"S" LINE			
10	"S" LINE			

LOCATION F GEOMETRY

	ALIGNMENT	OFFSET	STATION	RADIUS
11	"S" LINE			
12	"S" LINE			
13	"S" LINE			
14	"S" LINE			
15	"S" LINE			
16	"S" LINE			
17	"S" LINE			
18	"S" LINE			
19	"S" LINE			
20	"S" LINE			
21	"S" LINE			

FOR REDUCED PLANS
ORIGINAL SCALE IS IN INCHES
0 1 2 3
ALL DIMENSIONS SHOWN IN FEET
UNLESS OTHERWISE NOTED

TJ-4

8/15/2016
...\51\1858\1004.dgn

REVISION #	DATE:	DESCRIPTION AND SHEET NO.:	APPROVED BY:	DATE:

REGISTERED PROFESSIONAL ENGINEER
MATTHEW N. GRIGGS
No. 54168
Exp. 12/31/16
CIVIL
STATE OF CALIFORNIA

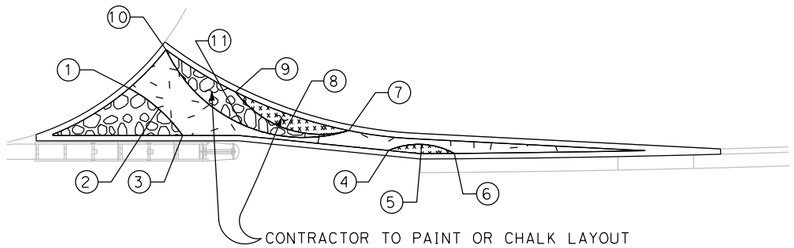

CONTRACTOR TO PAINT OR CHALK LAYOUT
OF DECORATIVE CONCRETE AND COBBLE
AREAS FOR APPROVAL BY ENGINEER, TYPICAL

LOCATION G

SCALE: 1"=10'

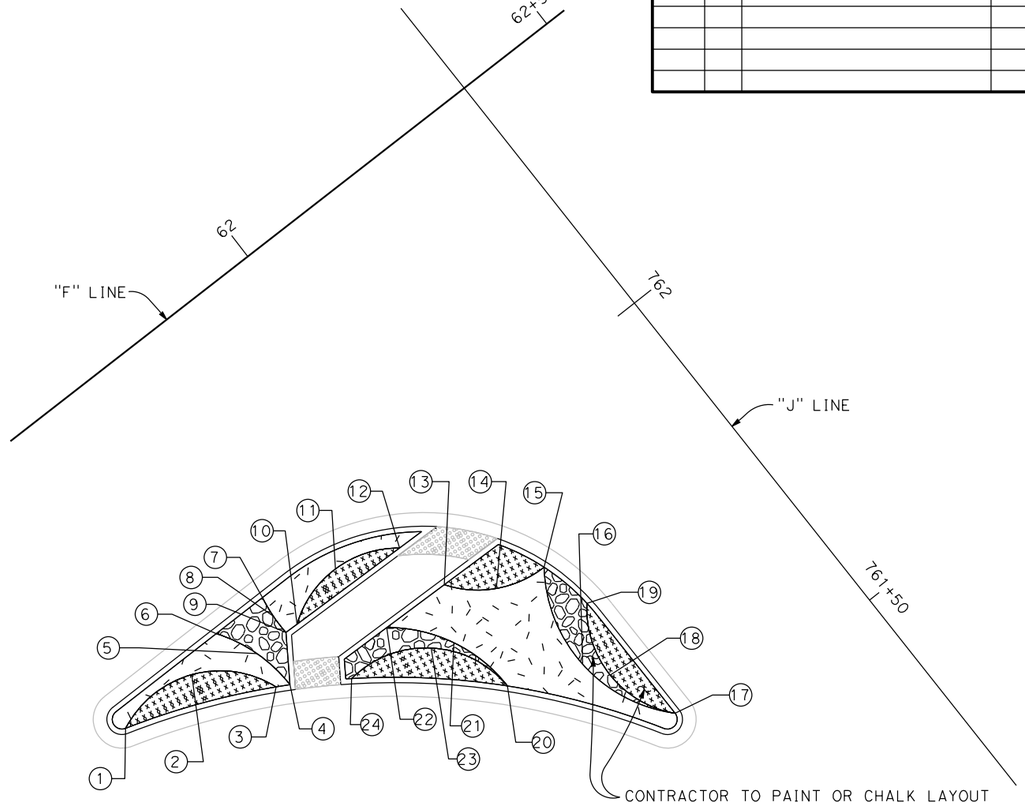

CONTRACTOR TO PAINT OR CHALK LAYOUT
OF DECORATIVE CONCRETE AND COBBLE
AREAS FOR APPROVAL BY ENGINEER, TYPICAL

LOCATION J

SCALE: 1"=10'

	LOCATION G GEOMETRY			
	ALIGNMENT	OFFSET	STATION	RADIUS
①	"F" LINE			
②	"F" LINE			
③	"F" LINE			
④	"F" LINE			
⑤	"F" LINE			
⑥	"F" LINE			
⑦	"F" LINE			
⑧	"F" LINE			
⑨	"F" LINE			
⑩	"F" LINE			
⑪	"F" LINE			

	LOCATION J GEOMETRY			
	ALIGNMENT	OFFSET	STATION	RADIUS
①	"F" LINE			
②	"F" LINE			
③	"F" LINE			
④	"F" LINE			
⑤	"F" LINE			
⑥	"F" LINE			
⑦	"F" LINE			
⑧	"F" LINE			
⑨	"F" LINE			
⑩	"F" LINE			
⑪	"F" LINE			
⑫	"F" LINE			

	LOCATION J GEOMETRY			
	ALIGNMENT	OFFSET	STATION	RADIUS
⑬	"S" LINE			
⑭	"S" LINE			
⑮	"S" LINE			
⑯	"S" LINE			
⑰	"S" LINE			
⑱	"S" LINE			
⑲	"S" LINE			
⑳	"S" LINE			
㉑	"S" LINE			
㉒	"S" LINE			
㉓	"S" LINE			
㉔	"S" LINE			

FOR REDUCED PLANS
ORIGINAL SCALE IS IN INCHES
0 1 2 3
ALL DIMENSIONS SHOWN IN FEET
UNLESS OTHERWISE NOTED

PLAN SCALE: 1"=40'
PROFILE SCALE:
HORIZ:
VERT:

CONTRACT NO: 17-XX
DESIGNED: M. GRIGGS
DRAWN: K. DANG
CHECKED:
RECORD DRAWING:
DATE:

DOKKEN ENGINEERING
110 BLUE RAVINE ROAD #200
FOLSOM, CA 95630
PHONE: (916) 858-0642
FAX: (916) 985-1845

CITY OF YUBA CITY

5TH STREET BRIDGE REPLACEMENT

HARDSCAPE PLAN

SHEET NO.
OF
215

TJ-5

8/15/2016

...\511\858tj005.dgn

REVISION #	DATE:	DESCRIPTION AND SHEET NO.:	APPROVED BY:	DATE:

REGISTERED PROFESSIONAL ENGINEER
MATTHEW N. GRIGGS
No. 54168
Exp. 12/31/16
CIVIL
STATE OF CALIFORNIA

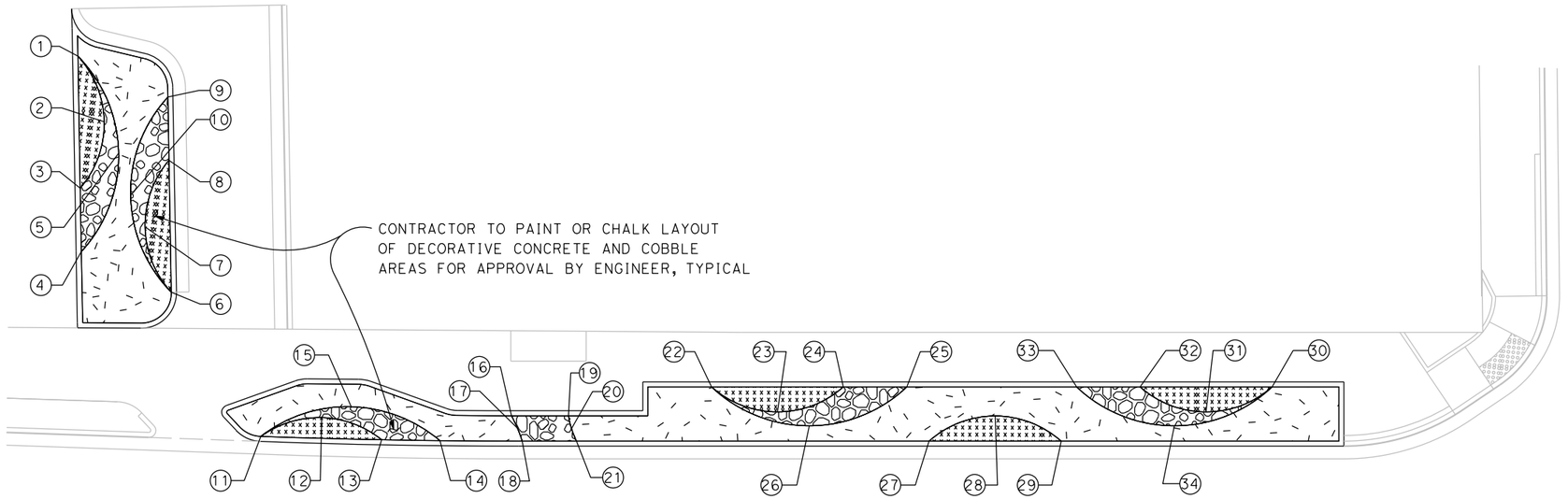

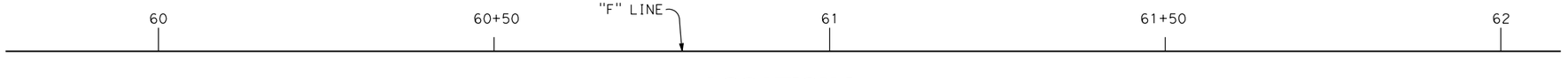

LOCATION I

SCALE: 1"=10'

	LOCATION I GEOMETRY			
	ALIGNMENT	OFFSET	STATION	RADIUS
①	"F" LINE			
②	"F" LINE			
③	"F" LINE			
④	"F" LINE			
⑤	"F" LINE			
⑥	"F" LINE			
⑦	"F" LINE			
⑧	"F" LINE			
⑨	"F" LINE			
⑩	"F" LINE			
⑪	"F" LINE			
⑫	"F" LINE			
⑬	"F" LINE			
⑭	"F" LINE			

	LOCATION I GEOMETRY			
	ALIGNMENT	OFFSET	STATION	RADIUS
①	"F" LINE			
②	"F" LINE			
③	"F" LINE			
④	"F" LINE			
⑤	"F" LINE			
⑥	"F" LINE			
⑦	"F" LINE			
⑧	"F" LINE			
⑨	"F" LINE			
⑩	"F" LINE			
⑪	"F" LINE			
⑫	"F" LINE			
⑬	"F" LINE			
⑭	"F" LINE			

FOR REDUCED PLANS
ORIGINAL SCALE IS IN INCHES
0 1 2 3
ALL DIMENSIONS SHOWN IN FEET
UNLESS OTHERWISE NOTED

PLAN SCALE: 1"=40'
PROFILE SCALE:
HORIZ:
VERT:

CONTRACT NO: 17-XX
DESIGNED: M. GRIGGS
DRAWN: K. DANG
CHECKED:
RECORD DRAWING: DATE:

DOKKEN ENGINEERING
110 BLUE RAVINE ROAD #200
FOLSOM, CA 95630
PHONE: (916) 858-0642
FAX: (916) 858-0643

CITY OF YUBA CITY

5TH STREET BRIDGE REPLACEMENT
HARDSCAPE PLAN

SHEET NO.
TJ-6
OF
215

8/15/2016

...\5\1\1858\1006.dgn

REVISION #	DATE:	DESCRIPTION AND SHEET NO.:	APPROVED BY:	DATE:

REGISTERED PROFESSIONAL ENGINEER
MATTHEW N. GRIGGS
No. 54168
Exp. 12/31/16
CIVIL
STATE OF CALIFORNIA

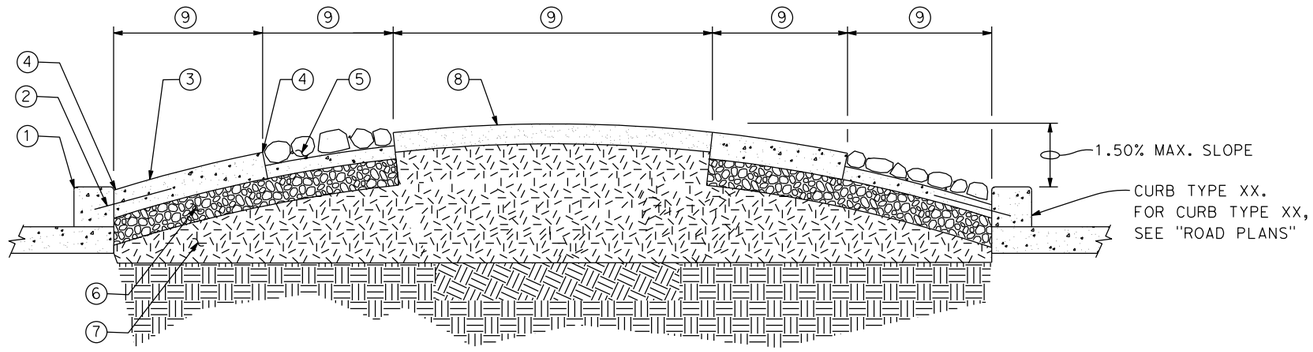

1. CURB PER ENGINEER'S PLAN
2. DOWEL 12" AT 3' O.C.
   3" INTO CURB
3. DECORATIVE CONCRETE, 4" THICK
   DAVIS COLOR DARK GREY
   (IRON OXIDE) 860.8" SWIRL FINISH
   #4 REBAR, 18" O.C. BOTH WAYS OR
   6" WELDED WIRE MESH.
4. COLD JOINT
5. COBBLE SET IN 4" THICK CONCRETE.
   COLOR 1LB BLACK PER CUBIC YARD
   #4 REBAR, 18" O.C. BOTH WAYS OR
   6" WELDED WIRE MESH.
   HALF OF COBBLE TO BE SET IN CONCRETE
   MAINTAIN ½" BETWEEN ROCKS
   GROUT ALL JOINTS. REMOVE EXCESS
   CONCRETE IN JOINTS. TROWEL TO ½"
   DEEP BETWEEN JOINTS. COBBLE LAYOUT
   TO FOLLOW RADIAL PATTERN OF SHEETS
   TJ-2, TJ-3, TJ-4, TJ-5 & TJ-6 COBBLE
   STONE PATTERN RANDOM WITH FLAT SIDE UP
6. 4" CLASS 2 AB
   COMPACT TO 90% R.D.
7. SUBGRADE
   COMPACT TO 90% R.D.
8. DECOMPOSED GRANITE
   GOLD COLORED. 3" LAYER
9. WIDTH VARIES PER PLAN

TYPICAL SECTION

SCALE: NTS

CONSTRUCTION NOTES

1. CONFIRM ALL LOCATIONS OF EXISTING UTILITIES WITHIN PROJECT SITE PRIOR TO EXCAVATION. THE CONTRACTOR IS RESPONSIBLE FOR THE PROTECTION AND REPAIR OF DAMAGE TO ALL EXISTING UTILITIES. CALL ALL APPLICABLE AGENCIES AND USA, (800) 642-2444. THE LANDSCAPE ARCHITECT CANNOT BE RESPONSIBLE FOR THE COMPLETENESS OR ACCURACY OF THIS INFORMATION AND PROVISION OF TENTATIVE UTILITY LOCATION DOES NOT IN ANY WAY RELIEVE THE CONTRACTOR OF HIS RESPONSIBILITY TO CONTACT USA AND APPLICABLE AGENCIES FOR VERIFICATION.
2. CONTRACTOR SHALL OBSERVE ALL SAFETY REGULATIONS PERTAINING TO THIS PROJECT.
3. ANY CHANGES SHALL BE APPROVED BY THE OWNER PRIOR TO CONSTRUCTION.
4. REFER TO ARCHITECT AND ENGINEER PLANS FOR ADDITIONAL INFORMATION.

FOR REDUCED PLANS
ORIGINAL SCALE IS IN INCHES
0 1 2 3
ALL DIMENSIONS SHOWN IN FEET
UNLESS OTHERWISE NOTED

PLAN SCALE: 1"=40'
PROFILE SCALE:
HORIZ:
VERT:

CONTRACT NO: 17-XX
DESIGNED: M. GRIGGS
DRAWN: K. DANG
CHECKED:
RECORD DRAWING: DATE:

DOKKEN ENGINEERING
110 BLUE RAVINE ROAD #200
FOLSOM, CA 95630
PHONE: (916) 858-0642
FAX: (916) 858-0643

CITY OF YUBA CITY

5TH STREET BRIDGE REPLACEMENT
HARDSCAPE PLAN

SHEET NO.
TJ-7
OF
215

8/15/2016
...\5\1\1858\1007.dgn

TRAFFIC SIGNAL GENERAL NOTES: (FOR THIS SHEET ONLY)

1. ALL WORK SHALL CONFORM WITH THE APPLICABLE PROVISIONS OF THE 2015 CALTRANS STANDARD PLANS AND SPECS AND THE 2014 CALIFORNIA MUTCD.
2. PEDESTRIAN PUSH BUTTONS SHALL BE APS TYPE.
3. PEDESTRIAN SIGNALS SHALL BE COUNTDOWN PEDESTRIAN SIGNALS.
4. PULL BOXES SHALL BE NO. 5 & COMPLY WITH SPECIAL PROVISIONS & ES-8 OF THE STANDARD PLANS UNLESS OTHERWISE INDICATED OR NOTED.
5. ANY SIDEWALK OR CURB AND GUTTER DAMAGED OR REMOVED DURING TRENCHING OF CONDUIT OR PLACEMENT OF PULL BOXES SHALL BE REPLACED AT THE CONTRACTOR'S EXPENSE.
6. ALL DETECTOR HAND HOLES ARE TO BE PLACED IN LINE WITH PAVEMENT STRIPING.
7. CONTRACTOR SHALL BE RESPONSIBLE FOR VERIFICATION OF ALL UNDERGROUND UTILITIES. CONTRACTOR TO CONTACT UNDERGROUND SERVICE ALERT (USA) 48 HRS PRIOR TO ANY EXCAVATION. WHERE UTILITIES ARE SHOWN TO BE NEAR FOUNDATIONS, CONTRACTOR TO POTHOLE EXACT LOCATION.
8. LOCATION OF ELECTRICAL EQUIPMENT IS SHOWN APPROXIMATELY. CONTRACTOR TO GET APPROVAL OF ENGINEER FOR EXACT LOCATIONS.

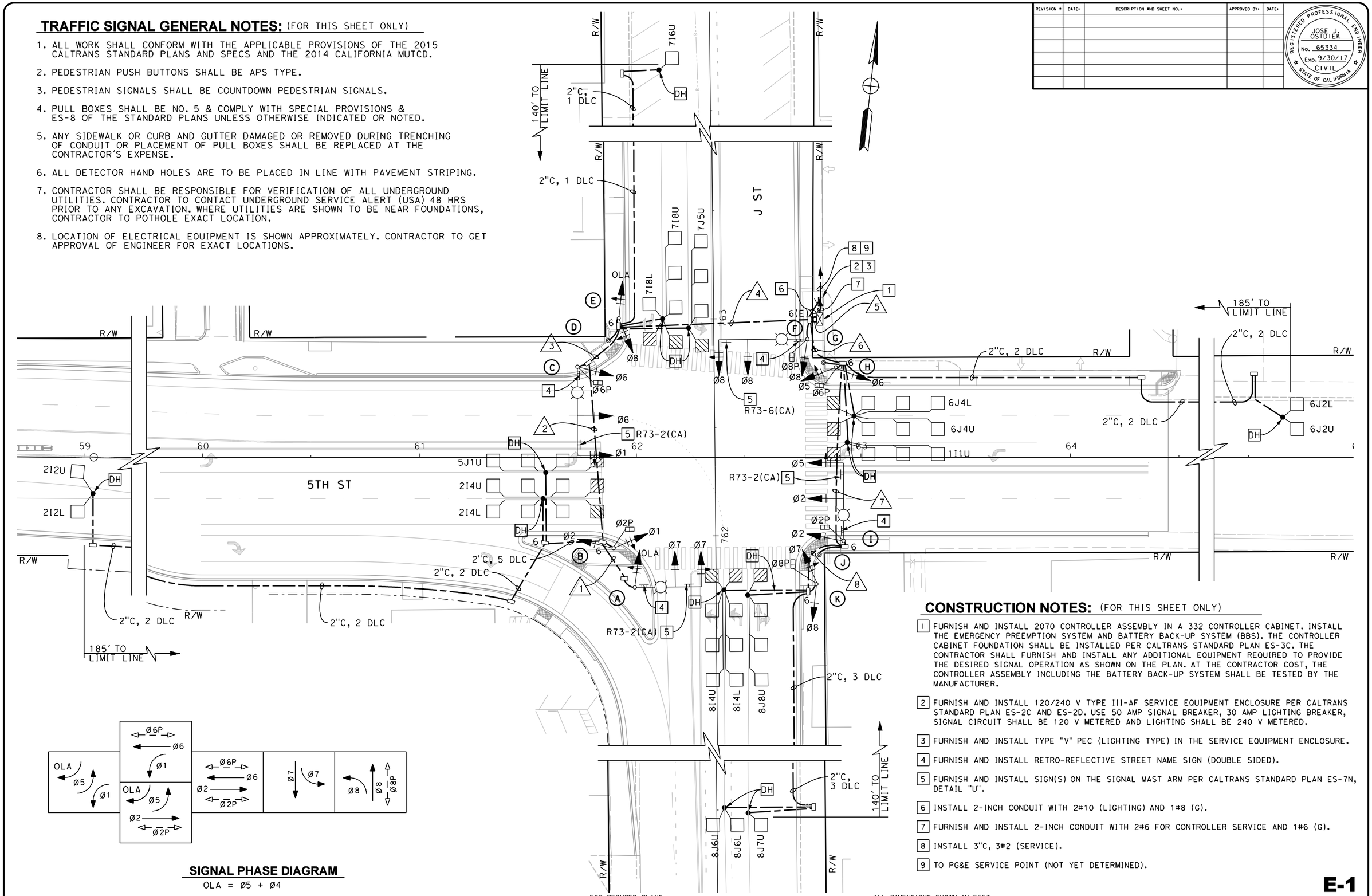

SIGNAL PHASE DIAGRAM

OLA = Ø5 + Ø4

CONSTRUCTION NOTES: (FOR THIS SHEET ONLY)

1. FURNISH AND INSTALL 2070 CONTROLLER ASSEMBLY IN A 332 CONTROLLER CABINET. INSTALL THE EMERGENCY PREEMPTION SYSTEM AND BATTERY BACK-UP SYSTEM (BBS). THE CONTROLLER CABINET FOUNDATION SHALL BE INSTALLED PER CALTRANS STANDARD PLAN ES-3C. THE CONTRACTOR SHALL FURNISH AND INSTALL ANY ADDITIONAL EQUIPMENT REQUIRED TO PROVIDE THE DESIRED SIGNAL OPERATION AS SHOWN ON THE PLAN. AT THE CONTRACTOR COST, THE CONTROLLER ASSEMBLY INCLUDING THE BATTERY BACK-UP SYSTEM SHALL BE TESTED BY THE MANUFACTURER.
2. FURNISH AND INSTALL 120/240 V TYPE III-AF SERVICE EQUIPMENT ENCLOSURE PER CALTRANS STANDARD PLAN ES-2C AND ES-2D. USE 50 AMP SIGNAL BREAKER, 30 AMP LIGHTING BREAKER, SIGNAL CIRCUIT SHALL BE 120 V METERED AND LIGHTING SHALL BE 240 V METERED.
3. FURNISH AND INSTALL TYPE "V" PEC (LIGHTING TYPE) IN THE SERVICE EQUIPMENT ENCLOSURE.
4. FURNISH AND INSTALL RETRO-REFLECTIVE STREET NAME SIGN (DOUBLE SIDED).
5. FURNISH AND INSTALL SIGN(S) ON THE SIGNAL MAST ARM PER CALTRANS STANDARD PLAN ES-7N, DETAIL "U".
6. INSTALL 2-INCH CONDUIT WITH 2#10 (LIGHTING) AND 1#8 (G).
7. FURNISH AND INSTALL 2-INCH CONDUIT WITH 2#6 FOR CONTROLLER SERVICE AND 1#6 (G).
8. INSTALL 3"C, 3#2 (SERVICE).
9. TO PG&E SERVICE POINT (NOT YET DETERMINED).

FOR REDUCED PLANS ORIGINAL SCALE IS IN INCHES

0 1 2 3

ALL DIMENSIONS SHOWN IN FEET UNLESS OTHERWISE NOTED

PLANS APPROVED FOR ELECTRICAL WORK ONLY

E-1

REVISION #	DATE:	DESCRIPTION AND SHEET NO.:	APPROVED BY:	DATE:

REGISTERED PROFESSIONAL ENGINEER
JOSE J. OSTDIEK
No. 65334
EXP. 9/30/17
CIVIL
STATE OF CALIFORNIA

PLAN SCALE: 1"=20'
PROFILE SCALE:
HORIZ:
VERT:

CONTRACT NO: 17-XX
DESIGNED: J. OSTDIEK
DRAWN: J. RODRIGUEZ
CHECKED:
RECORD DRAWING:
DATE:

DOKKEN ENGINEERING
110 BLUE RAVINE ROAD #200
FOLSOM, CA 95630
PHONE: (916) 858-0642
FAX: (916) 858-0643

CITY OF YUBA CITY

5TH STREET BRIDGE REPLACEMENT
TRAFFIC SIGNAL PLAN
5TH ST. AT J ST.

SHEET NO.
OF
215

8/15/2016

...\511\1858ua001.dgn

REVISION #	DATE:	DESCRIPTION AND SHEET NO.:	APPROVED BY:	DATE:

REGISTERED PROFESSIONAL ENGINEER
JOSE J. OSTDIEK
No. 65334
Exp. 9/30/17
CIVIL
STATE OF CALIFORNIA

PLAN SCALE:
PROFILE SCALE:
HORIZ:
VERT:

CONTRACT NO: 17-XX
DESIGNED: J. OSTDIEK
DRAWN: J. RODRIGUEZ
CHECKED:
RECORD DRAWING:
DATE:

DOKKEN ENGINEERING
110 BLUE RAVINE ROAD #200
FOLSOM, CA 95630
PHONE: (916) 858-0642
FAX: (916) 985-1845

CITY OF YUBA CITY

5TH STREET BRIDGE REPLACEMENT

TRAFFIC SIGNAL PLAN
5TH ST. AT J ST.

SHEET NO.
OF
215

CONDUIT AND CONDUCTOR SCHEDULE

CABLE SCHEDULE			CONDUIT RUN NUMBER								
CABLE TYPE	STD	PHASE	1	2	3	4	5	6	7	8	9
VEH-PED 12CSC	(A)	7, OLA	1	1	1	1	1				
	(B)	1, 2, 2P / 2		1 / 1	1 / 1	1 / 1	1 / 1				
	(C)	1, 6, 6P			1	1	1				
	(D)	6					1	1			
	(E)	8, OLA				1	1				
	(F)	8, 8P					1				
	(G)	6, 8					2	2			
PPB 3CSC	(H)	5, 6, 6P					1	1			
	(I)	2, 5, 2P					1	1	1		
	(J)	2, 8					2	2	2		
	(K)	7, 8, 8P					1	1	1	1	
		TOTAL	1	2 / 1	3 / 1	4 / 2	8 / 6	3 / 4	2 / 2	1	
AWG SIZE		CIRCUIT									
#8 BARE		GROUND	1	1	1	1	2	1	1	1	
#10		LIGHTING	2	2	2	2		2	2		
DLC (TYPE B)		Ø1					1	1			
		Ø2		4	4	4	4				
		Ø5		1	1	1	1				
		Ø6					4	4			
		Ø7				4	4				
		Ø8					4	4	4	4	
		TOTAL DLC		5	5	9	18	9	4	4	
CONDUIT SIZE (INCHES)			3	4	4	4	2-4	4	4	3	

POLE AND EQUIPMENT SCHEDULE

NO.	STANDARD			VEHICLE SIGNAL		PED SIGNAL		PPB		LED LUMINAIRE (WATTS)	NOTES
	TYPE	SIG. MA (Ft)	LUM. MA (Ft)	MOUNTING MAST ARM	MOUNTING POLE	Ø	MOUNTING	Ø	ARROW		
(A)	19-4-100	30	15	MAS MAS	SV-1-T					ROADWAY 1	F=12'
(B)	1-B	--	--	--	TV-2-T	2	SP-1-T	2	►		
(C)	26-4-100	40	15	MAS MAS	SV-1-T	6	SP-1-T			ROADWAY 1	F=18'
(D)								6	►		
										ROADWAY 1	F=13'
									◄ ►		
										ROADWAY 1	F=16.5'
(J)									► ◄		

SEE CALTRANS REVISED STANDARD SPECIFICATIONS

SIGNS:

J Street

8" SERIES E UPPER CASE
6" LOWER CASE LETTERS

SIGNAL MAST ARM LOCATION (C) & (I)

5TH Street

8" SERIES E UPPER CASE
6" LOWER CASE LETTERS

SIGNAL MAST ARM LOCATION (A) & (F)

FOR REDUCED PLANS ORIGINAL SCALE IS IN INCHES 0 1 2 3

ALL DIMENSIONS SHOWN IN FEET UNLESS OTHERWISE NOTED

E-2

8/15/2016

...\511\1858ua002.dgn

REVISION #	DATE:	DESCRIPTION AND SHEET NO.:	APPROVED BY:	DATE:

REGISTERED PROFESSIONAL ENGINEER
JOSE J. OSTDIEK
No. 65334
Exp. 9/30/17
CIVIL
STATE OF CALIFORNIA

PLAN SCALE: 1"=20'
PROFILE SCALE:
HORIZ:
VERT:

CONTRACT NO: 17-XX
DESIGNED: J. OSTDIEK
DRAWN: J. RODRIGUEZ
CHECKED:
RECORD DRAWING:
DATE:

DOKKEN ENGINEERING
110 BLUE RAVINE ROAD #200
FOLSOM, CA 95630
PHONE: (916) 858-0642
FAX: (916) 858-0643

CITY OF YUBA CITY

5TH STREET BRIDGE REPLACEMENT
TRAFFIC SIGNAL PLAN
5TH ST. AT J ST.

SHEET NO.
OF
215

CONSTRUCTION NOTES: (FOR THIS SHEET ONLY)

1. REMOVE AND SALVAGE EXISTING CONTROLLER ASSEMBLY AND CABINET.
2. REMOVE AND SALVAGE EXISTING TYPE III SERVICE EQUIPMENT ENCLOSURE.
3. REMOVE AND SALVAGE EXISTING VIDEO DETECTION CAMERAS TO CITY.
4. LOCATION OF PROPOSED SIGNAL POLE.

NOTES: (FOR THIS SHEET ONLY)

1. REMOVE AND SALVAGE ALL EXISTING POLES AND SIGNAL EQUIPMENT.
2. RC ALL EXISTING PULL BOXES UNLESS OTHERWISE SHOWN.
3. ABANDON ALL EXISTING CONDUIT. REMOVE EXISTING CONDUCTORS.

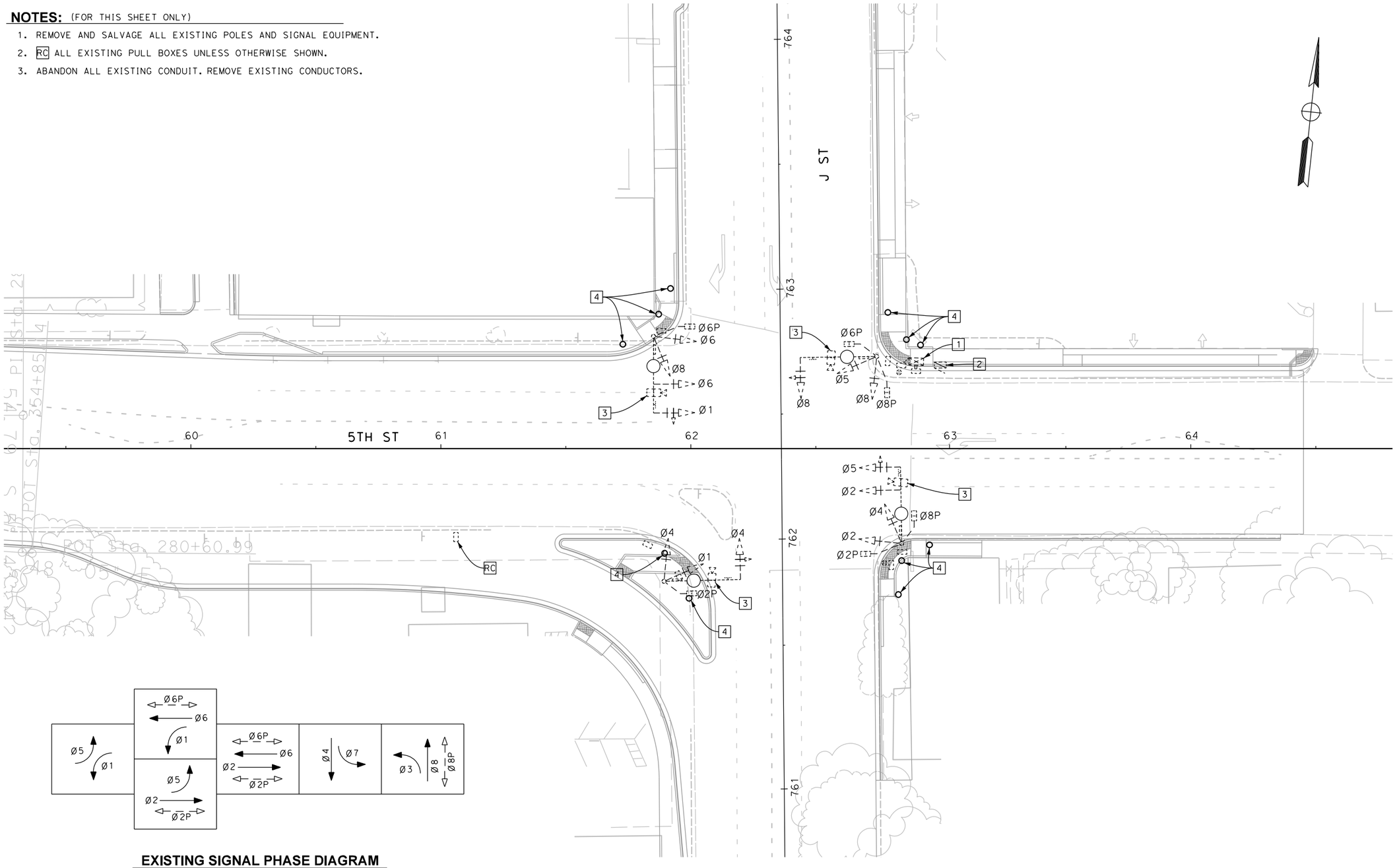

EXISTING SIGNAL PHASE DIAGRAM

FOR REDUCED PLANS ORIGINAL SCALE IS IN INCHES 0 1 2 3

ALL DIMENSIONS SHOWN IN FEET UNLESS OTHERWISE NOTED

PLANS APPROVED FOR ELECTRICAL WORK ONLY

E-3

8/15/2016

...\511\1858ua003.dgn

NOTES:

1. SEE SHEET E-1 FOR TRAFFIC SIGNAL GENERAL NOTES.

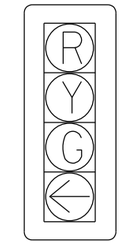

DETAIL A

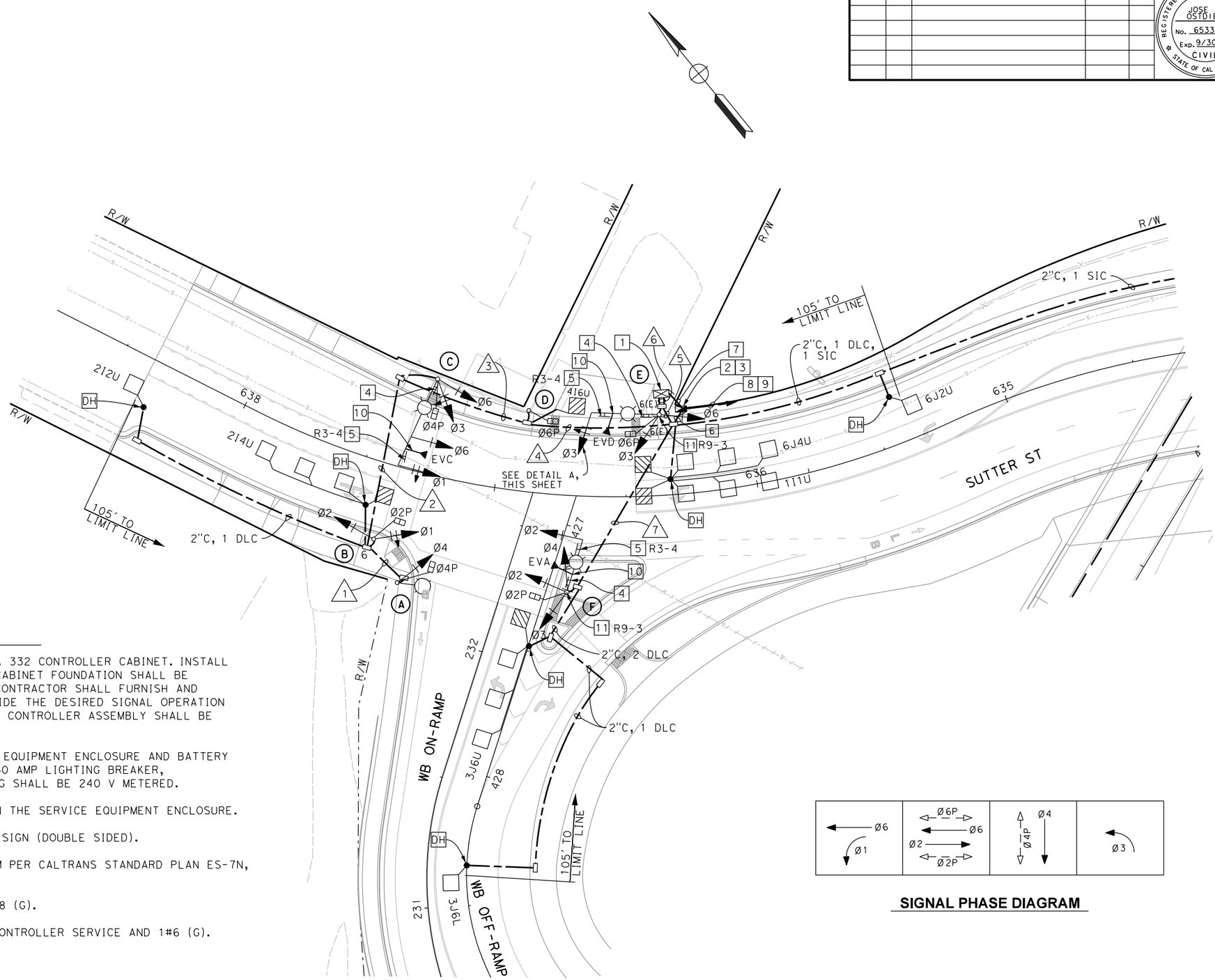

CONSTRUCTION NOTES: (FOR THIS SHEET ONLY)

1. FURNISH AND INSTALL 2070 CONTROLLER ASSEMBLY IN A 332 CONTROLLER CABINET. INSTALL THE EMERGENCY PREEMPTION SYSTEM. THE CONTROLLER CABINET FOUNDATION SHALL BE INSTALLED PER CALTRANS STANDARD PLAN ES-3C. THE CONTRACTOR SHALL FURNISH AND INSTALL ANY ADDITIONAL EQUIPMENT REQUIRED TO PROVIDE THE DESIRED SIGNAL OPERATION AS SHOWN ON THE PLAN. AT THE CONTRACTOR COST, THE CONTROLLER ASSEMBLY SHALL BE TESTED BY THE MANUFACTURER.
2. FURNISH AND INSTALL 120/240 V TYPE III-AF SERVICE EQUIPMENT ENCLOSURE AND BATTERY BACK-UP SYSTEM (BBS). USE 50 AMP SIGNAL BREAKER, 30 AMP LIGHTING BREAKER, SIGNAL CIRCUIT SHALL BE 120 V METERED AND LIGHTING SHALL BE 240 V METERED.
3. FURNISH AND INSTALL TYPE "V" PEC (LIGHTING TYPE) IN THE SERVICE EQUIPMENT ENCLOSURE.
4. FURNISH AND INSTALL RETRO-REFLECTIVE STREET NAME SIGN (DOUBLE SIDED).
5. FURNISH AND INSTALL SIGN(S) ON THE SIGNAL MAST ARM PER CALTRANS STANDARD PLAN ES-7N, DETAIL "U".
6. INSTALL 2-INCH CONDUIT WITH 2#10 (LIGHTING) AND 1#8 (G).
7. FURNISH AND INSTALL 2-INCH CONDUIT WITH 2#6 FOR CONTROLLER SERVICE AND 1#6 (G).
8. INSTALL 3"C, 3#2 (SERVICE).
9. TO PG&E SERVICE POINT (NOT YET DETERMINED).
10. INSTALL EMERGENCY VEHICLE DETECTOR ON MAST ARM.
11. FURNISH AND INSTALL SIGN(S) ON SIGNAL STANDARD.

SIGNAL PHASE DIAGRAM

REVISION #	DATE:	DESCRIPTION AND SHEET NO.:	APPROVED BY:	DATE:

REGISTERED PROFESSIONAL ENGINEER
JOSE J. OSTDIEK
No. 65334
Exp. 9/30/17
CIVIL
STATE OF CALIFORNIA

PLAN SCALE: 1"=20'
PROFILE SCALE:
HORIZ:
VERT:

CONTRACT NO: 17-XX
DESIGNED: J. OSTDIEK
DRAWN: J. RODRIGUEZ
CHECKED:
RECORD DRAWING:
DATE:

DOKKEN ENGINEERING
110 BLUE RAVINE ROAD #200
FOLSOM, CA 95630
PHONE: (916) 858-0642
FAX: (916) 985-1845

CITY OF YUBA CITY

5TH STREET BRIDGE REPLACEMENT
TRAFFIC SIGNAL PLAN
WB OFF-RAMP AT SUTTER ST.

SHEET NO.
OF
215

E-4

8/15/2016

...\5\1\858ua004.dgn

FOR REDUCED PLANS ORIGINAL SCALE IS IN INCHES 0 1 2 3

ALL DIMENSIONS SHOWN IN FEET UNLESS OTHERWISE NOTED

PLANS APPROVED FOR ELECTRICAL WORK ONLY

POLE AND EQUIPMENT SCHEDULE

NO.	STANDARD TYPE	STANDARD SIG. MA (Ft)	STANDARD LUM. MA (Ft)	VEHICLE SIGNAL MOUNTING MAST ARM	VEHICLE SIGNAL MOUNTING POLE	PED SIGNAL Ø	PED SIGNAL MOUNTING	PPB Ø	PPB ARROW	LED LUMINAIRE (WATTS)	SPECIAL REQUIREMENTS**
(A)	15TS	--	12	--	--	4	SP-1-T	2	←	160	FLUTED ORNAMENTAL
(B)	1-A	--	--	--	TV-2-T	2	SP-1-T	4	→		FLUTED ORNAMENTAL
(C)	24-4-100	35	12	MAS MAS	SV-2-TA	4	SP-1-T	4	←	160	FLUTED ORNAMENTAL
(D)	1-A	--	--	--	TV-1-T	6	SP-1-T	6	→		FLUTED ORNAMENTAL
(E)	19-4-100	25	12	MAS	SV-2-TA	6	SP-1-T	6	←	160	FLUTED ORNAMENTAL
(F)	17-3-100	20	12	MAS	SV-2-TA	2	SP-1-T	2	←	160	FLUTED ORNAMENTAL

** SEE DETAIL ON SHEET E-7.

SIGNS:

Bridge Street — 8" SERIES E UPPER CASE 6" LOWER CASE LETTERS

SIGNAL MAST ARM LOCATION (A) & (D)

Sutter Street — 8" SERIES E UPPER CASE 6" LOWER CASE LETTERS

SIGNAL MAST ARM LOCATIONS (C)

REVISION #	DATE:	DESCRIPTION AND SHEET NO.:	APPROVED BY:	DATE:

REGISTERED PROFESSIONAL ENGINEER — JOSE J. OSTDIEK — No. 65334 — EXP. 9/30/17 — CIVIL — STATE OF CALIFORNIA

PLAN SCALE: N/A
PROFILE SCALE:
HORIZ:
VERT:

CONTRACT NO: 17-XX
DESIGNED: J. OSTDIEK
DRAWN: J. RODRIGUEZ
CHECKED:
RECORD DRAWING:
DATE:

DOKKEN ENGINEERING
110 BLUE RAVINE ROAD #200
FOLSOM, CA 95630
PHONE: (916) 858-0642
FAX: (916) 985-1845

CITY OF YUBA CITY

5TH STREET BRIDGE REPLACEMENT
TRAFFIC SIGNAL PLAN
WB OFF-RAMP AT SUTTER ST.

SHEET NO.
OF
215

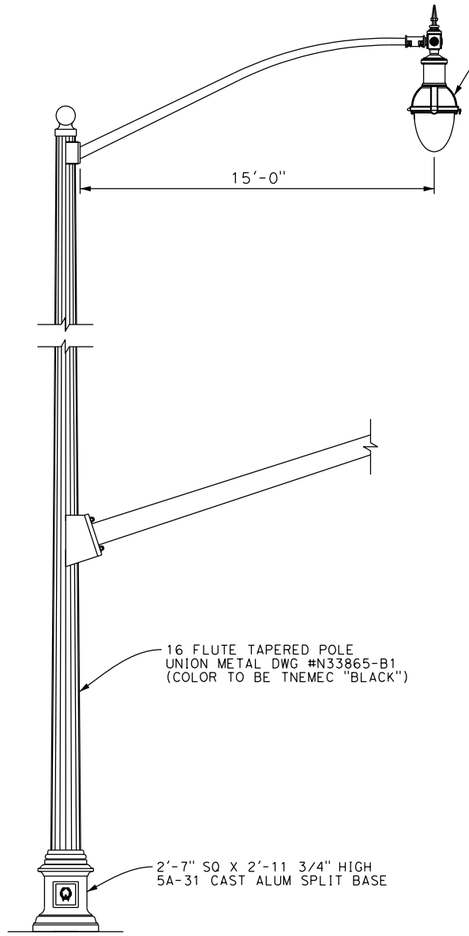

ORNAMENTAL TRAFFIC POLE AND LUMINAIRE DETAIL

LEGEND:

— — —	EXTERNAL CONDUCTOR
—●—	TIE POINT
———	CONDUCTOR OR BUS
~~	CONTACTOR COIL
—| |—	CONTACTOR, CONTACT NO
⊗	TERMINAL BLOCKS
—|/—	CONTACTOR, CONTACT NC
⊟	TEST BYPASS FACILIITIES
P	POLE
CB	CIRCUIT BREAKER
A	AMPERE
V	VOLT
M	METERED
UM	UNMETERED
SN	SOLID NEUTRAL
NO	NORMALLY OPEN
NC	NORMALLY CLOSED

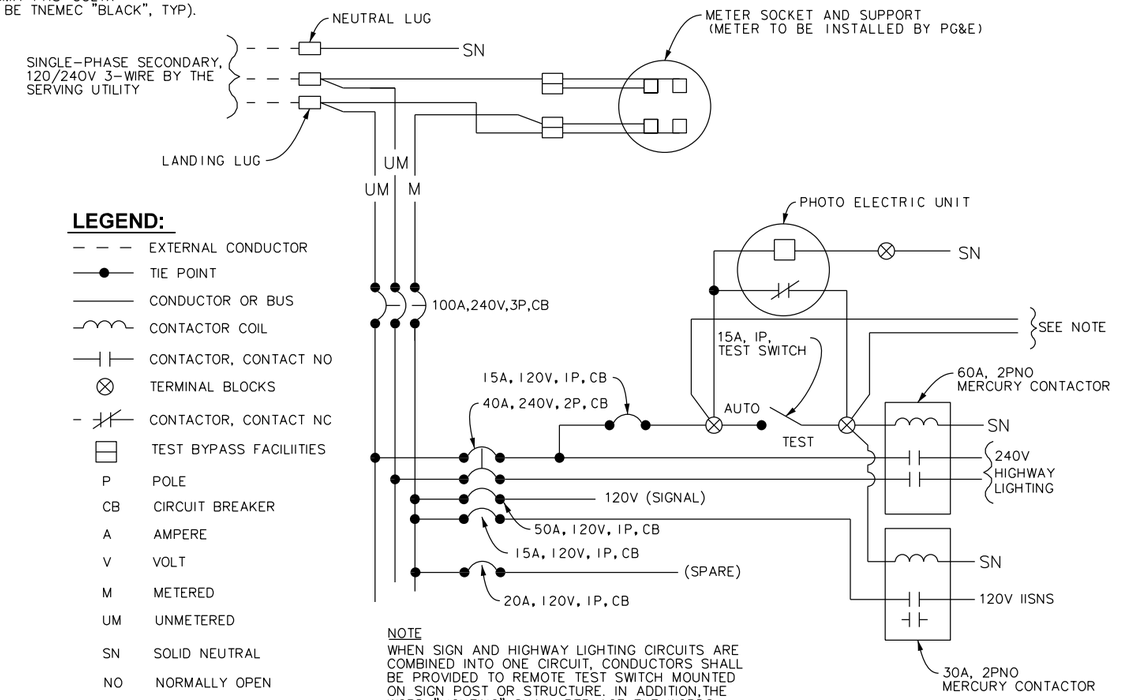

NOTE
WHEN SIGN AND HIGHWAY LIGHTING CIRCUITS ARE COMBINED INTO ONE CIRCUIT, CONDUCTORS SHALL BE PROVIDED TO REMOTE TEST SWITCH MOUNTED ON SIGN POST OR STRUCTURE. IN ADDITION, THE WORD "LIGHTING" SHALL REPLACE THE WORDS "HIGHWAY LIGHTING".

SERVICE CABINET WIRING DIAGRAM

METERED AND UNMETERED

CONTRACTOR IS TO PROVIDE & INSTALL OPTICOM 754 PHASE SELECTOR AND OPTICOM 757 AUXILIARY HARNESS, PROPERLY TERMINATED TO OUTPUT FILE.

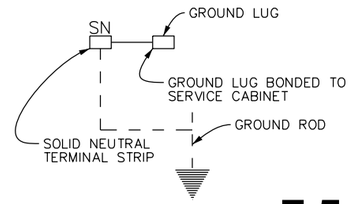

FOR REDUCED PLANS ORIGINAL SCALE IS IN INCHES 0 1 2 3 ALL DIMENSIONS SHOWN IN FEET UNLESS OTHERWISE NOTED

E-5

8/15/2016

...\511\1858ua005.dgn

CONSTRUCTION NOTES: (FOR THIS SHEET ONLY)

1. FURNISH AND INSTALL 2070 CONTROLLER ASSEMBLY IN A 332 CONTROLLER CABINET. INSTALL THE EMERGENCY PREEMPTION SYSTEM. THE CONTROLLER CABINET FOUNDATION SHALL BE INSTALLED PER CALTRANS STANDARD PLAN ES-3C. THE CONTRACTOR SHALL FURNISH AND INSTALL ANY ADDITIONAL EQUIPMENT REQUIRED TO PROVIDE THE DESIRED SIGNAL OPERATION AS SHOWN ON THE PLAN. AT THE CONTRACTOR COST, THE CONTROLLER ASSEMBLY SHALL BE TESTED BY THE MANUFACTURER.
2. FURNISH AND INSTALL 120/240 V TYPE III-AF SERVICE EQUIPMENT ENCLOSURE AND BATTERY BACK-UP SYSTEM (BBS). USE 50 AMP SIGNAL BREAKER, 30 AMP LIGHTING BREAKER, SIGNAL CIRCUIT SHALL BE 120 V METERED AND LIGHTING SHALL BE 240 V METERED.
3. FURNISH AND INSTALL TYPE "V" PEC (LIGHTING TYPE) IN THE SERVICE EQUIPMENT ENCLOSURE.
4. FURNISH AND INSTALL RETRO-REFLECTIVE STREET NAME SIGN (DOUBLE SIDED).
5. FURNISH AND INSTALL SIGN(S) ON THE SIGNAL MAST ARM PER CALTRANS STANDARD PLAN ES-7N, DETAIL "U".
6. INSTALL 2-INCH CONDUIT WITH 2#10 (LIGHTING) AND 1#8 (G).
7. FURNISH AND INSTALL 2-INCH CONDUIT WITH 2#6 FOR CONTROLLER SERVICE AND 1#6 (G).
8. INSTALL 3"C, 3#2 (SERVICE).
9. TO PG&E SERVICE POINT (NOT YET DETERMINED).
10. INSTALL EMERGENCY VEHICLE DETECTOR ON MAST ARM.
11. FURNISH AND INSTALL SIGN(S) ON SIGNAL STANDARD.

NOTES:

1. SEE SHEET E-1 FOR TRAFFIC SIGNAL GENERAL NOTES.

REVISION #	DATE:	DESCRIPTION AND SHEET NO.:	APPROVED BY:	DATE:

REGISTERED PROFESSIONAL ENGINEER
JOSE J. OSTDIEK
No. 65334
Exp. 9/30/17
CIVIL
STATE OF CALIFORNIA

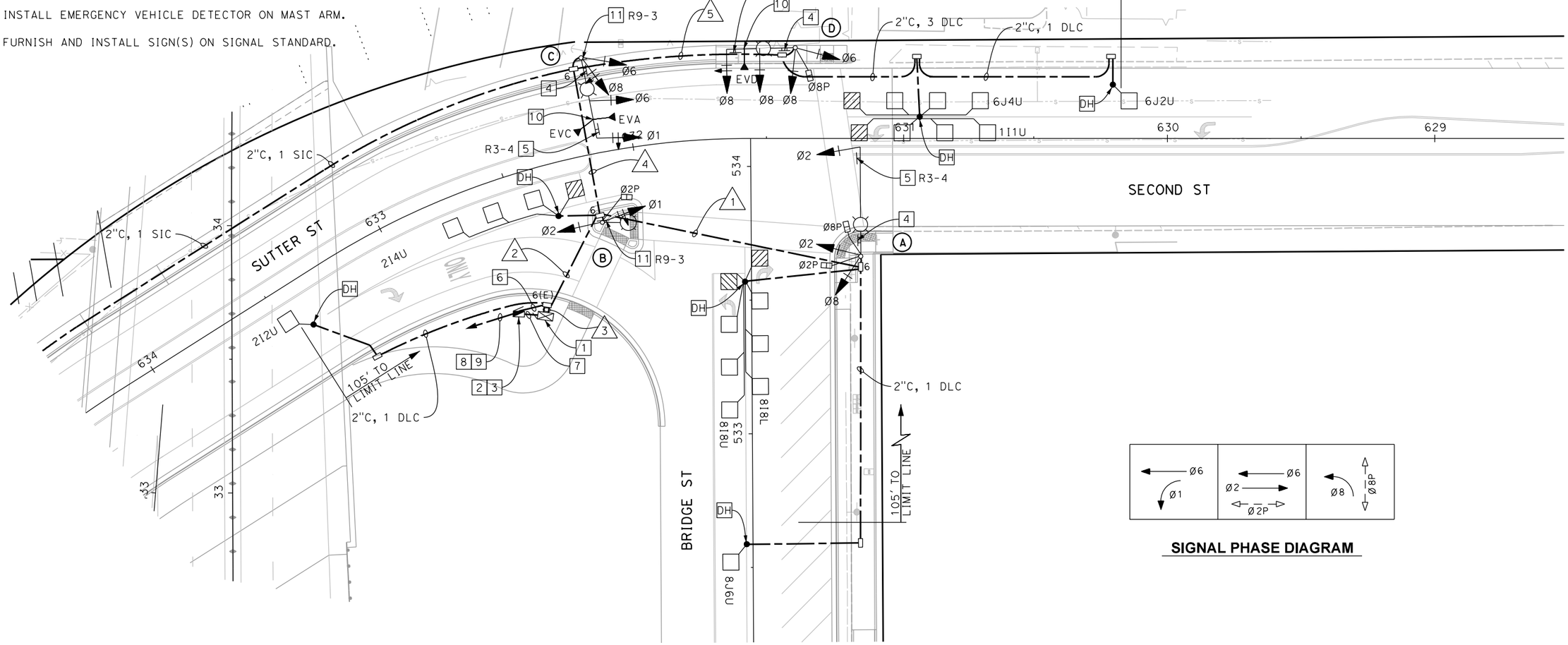

SIGNAL PHASE DIAGRAM

DESIGNED: J. OSTDIEK
DRAWN: J. RODRIGUEZ
CHECKED:
RECORD DRAWING: DATE:

CONTRACT NO: **17-XX**

DOKKEN ENGINEERING
110 BLUE RAVINE ROAD #200
FOLSOM, CA 95630
PHONE: (916) 858-0642
FAX: (916) 858-0643

PLAN SCALE: 1"=20'
PROFILE SCALE:
HORIZ:
VERT:

CITY OF **YUBA CITY**

5TH STREET BRIDGE REPLACEMENT
TRAFFIC SIGNAL PLAN
BRIDGE ST. AT SECOND ST.

SHEET NO.
OF
215

FOR REDUCED PLANS ORIGINAL SCALE IS IN INCHES 0 1 2 3
ALL DIMENSIONS SHOWN IN FEET UNLESS OTHERWISE NOTED

PLANS APPROVED FOR ELECTRICAL WORK ONLY

E-6

8/15/2016
...\511\1858ua006.dgn

CONDUIT AND CONDUCTOR SCHEDULE

CABLE SCHEDULE			CONDUIT RUN NUMBER								
CABLE TYPE	STD	PHASE	1	2	3	4	5	6	7	8	9
VEH-PED 12CSC / PPB 3CSC	(A)	2, 8, 2P, 8P / 2, 8	1 / 2	1 / 2	1 / 2						
	(B)	1, 2, 2P / 2		1 / 1	1 / 1						
	(C)	1, 6, 8		1	1	1					
	(D)	6, 8, 8P / 8		1 / 1	1 / 1	1 / 1	1 / 1				
		TOTAL	1 / 2	4 / 4	4 / 4	2 / 1	1 / 1				
AWG SIZE		CIRCUIT									
#8 BARE		GROUND	1	1	2	1	1				
#10		LIGHTING	2	2		2	2				
DLC (TYPE B)		Ø1		1	1	1	1				
		Ø2		1	2						
		Ø6		2	2	2	2				
		Ø8	2	2	2						
		TOTAL DLC	2	6	7	3	3				
SIGNAL INTERCONNECT				1	1	1					
CONDUIT SIZE (INCHES)			3	4	2-4	4	3				

POLE AND EQUIPMENT SCHEDULE

NO.	STANDARD			VEHICLE SIGNAL		PED SIGNAL		PPB		LED LUMINAIRE (WATTS)	SPECIAL REQUIREMENTS**
	TYPE	SIG. MA (Ft)	LUM. MA (Ft)	MOUNTING		Ø	MOUNTING	Ø	ARROW		
				MAST ARM	POLE						
(A)	26-3-100	40	12	MAS	SV-2-TA	2 8	SP-2-T	2 8	→ ←	160	FLUTED ORNAMENTAL
(B)	15TS	--	12	--	SV-2-TA	2	SP-1-T	2	→	160	FLUTED ORNAMENTAL
(C)	24-4-100	30	12	MAS MAS	SV-2-TA	--	--	--	--	160	FLUTED ORNAMENTAL, F=14'
(D)	19-4-100	25	12	MAS MAS	SV-2-TA	8	SP-1-T	8	←	160	FLUTED ORNAMENTAL, F=12.5'

SIGNS:

8" SERIES E UPPER CASE
6" LOWER CASE LETTERS

SIGNAL MAST ARM
LOCATION (A) & (D)

8" SERIES E UPPER CASE
6" LOWER CASE LETTERS

SIGNAL MAST ARM
LOCATIONS (B)

R3-4 ON SIGNAL MAST ARM LOCATIONS (A), (B) & (D)

FOR REDUCED PLANS
ORIGINAL SCALE IS IN INCHES

0 1 2 3

ALL DIMENSIONS SHOWN IN FEET
UNLESS OTHERWISE NOTED

REVISION #	DATE:	DESCRIPTION AND SHEET NO.:	APPROVED BY:	DATE:

REGISTERED PROFESSIONAL ENGINEER
JOSE J. OSTDIEK
No. 65334
Exp. 9/30/17
CIVIL
STATE OF CALIFORNIA

PLAN SCALE: N/A
PROFILE SCALE:
HORIZ:
VERT:

CONTRACT NO: 17-XX
DESIGNED: J. OSTDIEK
DRAWN: J. RODRIGUEZ
CHECKED:
RECORD DRAWING: DATE:

DOKKEN ENGINEERING
110 BLUE RAVINE ROAD #200
FOLSOM, CA 95630
PHONE: (916) 858-0642
FAX: (916) 985-1845

CITY OF
YUBA CITY

5TH STREET BRIDGE REPLACEMENT
TRAFFIC SIGNAL PLAN
BRIDGE ST. AT SECOND ST.

SHEET NO.
1
OF
215

E-7

8/15/2016

...\5111858ua007.dgn

STREET LIGHTING NOTES:

1. ALL ELECTRICAL WORK SHALL CONFORM TO CALTRANS 2015 STANDARD PLANS AND STANDARD SPECIFICATIONS, THE SPECIAL PROVISIONS AND THE CURRENT YUBA CITY STANDARD SPECIFICATIONS AND STANDARD DRAWINGS.
2. THE CONTRACTOR IS RESPONSIBLE FOR THE VERIFICATION OF ALL EXISTING UNDERGROUND UTILITIES WHETHER OR NOT THEY ARE SHOWN ON THESE PLANS. CONTRACTOR SHALL CONTACT UNDERGROUND SERVICE ALERT (USA) (811) AT LEAST 48 HOURS PRIOR TO ANY CONSTRUCTION. WHERE UTILITIES MAY BE IN CONFLICT WITH POLE FOUNDATIONS THE CONTRACTOR SHALL LOCATE UTILITY BY POTHOLING BEFORE EXCAVATING.
3. PULL BOXES AND CONDUITS ARE SHOWN IN THEIR APPROXIMATE LOCATIONS. FINAL LOCATIONS SHALL BE CONFIRMED BY THE ENGINEER IN THE FIELD. ALL STREET AND BRIDGE LIGHTING EQUIPMENT LOCATION SHALL BE COORDINATED WITH THE CIVIL AND BRIDGE PLANS.
4. ALL PULL BOXES SHALL BE MARKED "STREET LIGHTING".
5. CONTRACTOR SHALL COORDINATE WITH PG&E FOR SERVICE CONNECTION.
6. ALL CONDUITS WITH CONDUCTORS SHALL BE GROUNDED WITH PER THE NEC.
7. ALL PULL BOXES SHALL HAVE A THEFT DETERRENT INSERT INSTALLED (McCAIN OR EQUAL).

LEGEND:

- LUMEC RENAISSANCE LED LUMINAIRE ON 30' UNION METAL FLUTED DECORATIVE POLE AND 8' ARM
- STERNBERG LED PENDANT LUMINAIRE ON DECORATIVE POLE AND 8' ARM
- EXISTING MASTARM STREET LIGHT
- EXISTING POST TOP STREET LIGHT
- CREE EDGE SERIES PENDANT MOUNT LED LUMINAIRE (SOFFIT LIGHTING). CAT# CAN-EDG-3M-PM-10-UL-SV-52S-40K

CONSTRUCTION NOTES:

1. 2"C, 4#6 (CIRCUITS A, B), 1#6 (GROUND).
2. ENTER CONTROLLER AND LAND SIGNAL INTERCONNECT PER ENGINEER'S DIRECTIONS.

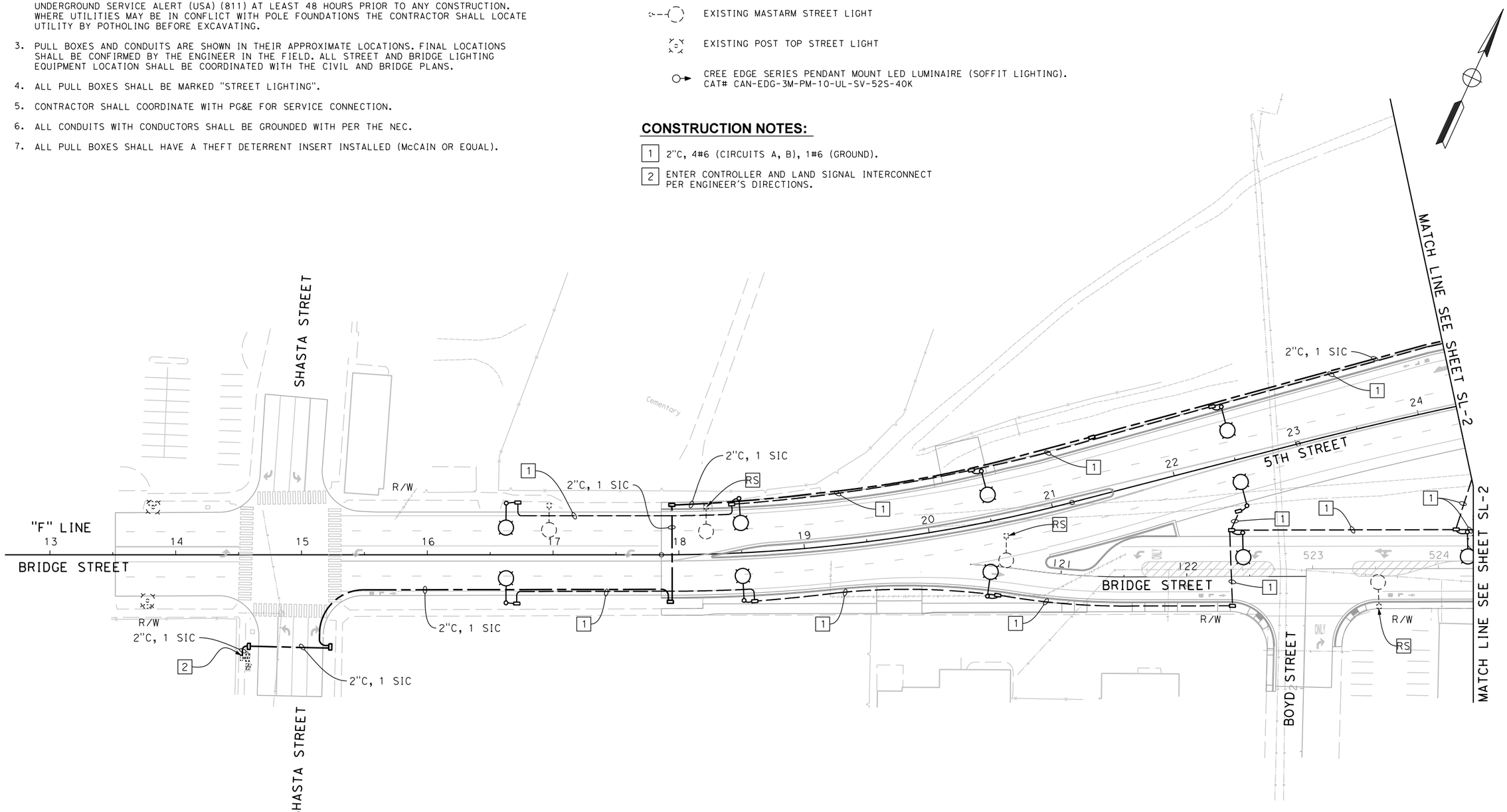

REVISION #	DATE:	DESCRIPTION AND SHEET NO.:	APPROVED BY:	DATE:

REGISTERED PROFESSIONAL ENGINEER
JOSE J. OSTDIEK
No. 65334
Exp. 9/30/17
CIVIL
STATE OF CALIFORNIA

PLAN SCALE: 1"=40'
PROFILE SCALE:
HORIZ:
VERT:

CONTRACT NO: 17-XX
DESIGNED: J. OSTDIEK
DRAWN: J. RODRIGUEZ
CHECKED:
RECORD DRAWING: DATE:

DOKKEN ENGINEERING
110 BLUE RAVINE ROAD #200
FOLSOM, CA 95630
PHONE: (916) 858-0642
FAX: (916) 858-0643

CITY OF YUBA CITY

5TH STREET BRIDGE REPLACEMENT
STREET AND BRIDGE LIGHTING
PLAN - SIGNAL INTERCONNECT

SHEET NO.
OF 215

SL-1

FOR REDUCED PLANS ORIGINAL SCALE IS IN INCHES 0 1 2 3
ALL DIMENSIONS SHOWN IN FEET UNLESS OTHERWISE NOTED

THIS PLAN APPROVED FOR ELECTRICAL WORK ONLY.

8/15/2016
...\511\1858ua008.dgn

NOTE:

1. SEE SHEET SL-1 FOR STREET LIGHTING NOTES AND LEGEND.

CONSTRUCTION NOTES:

1. 2"C, 4#6 (CIRCUITS A, B), 1#6 (GROUND).
2. FURNISH AND INSTALL ½V TYPE III-AF SERVICE EQUIPMENT ENCLOSURE.
3. 1"C, 2#8 (SOFFIT LIGHTING)

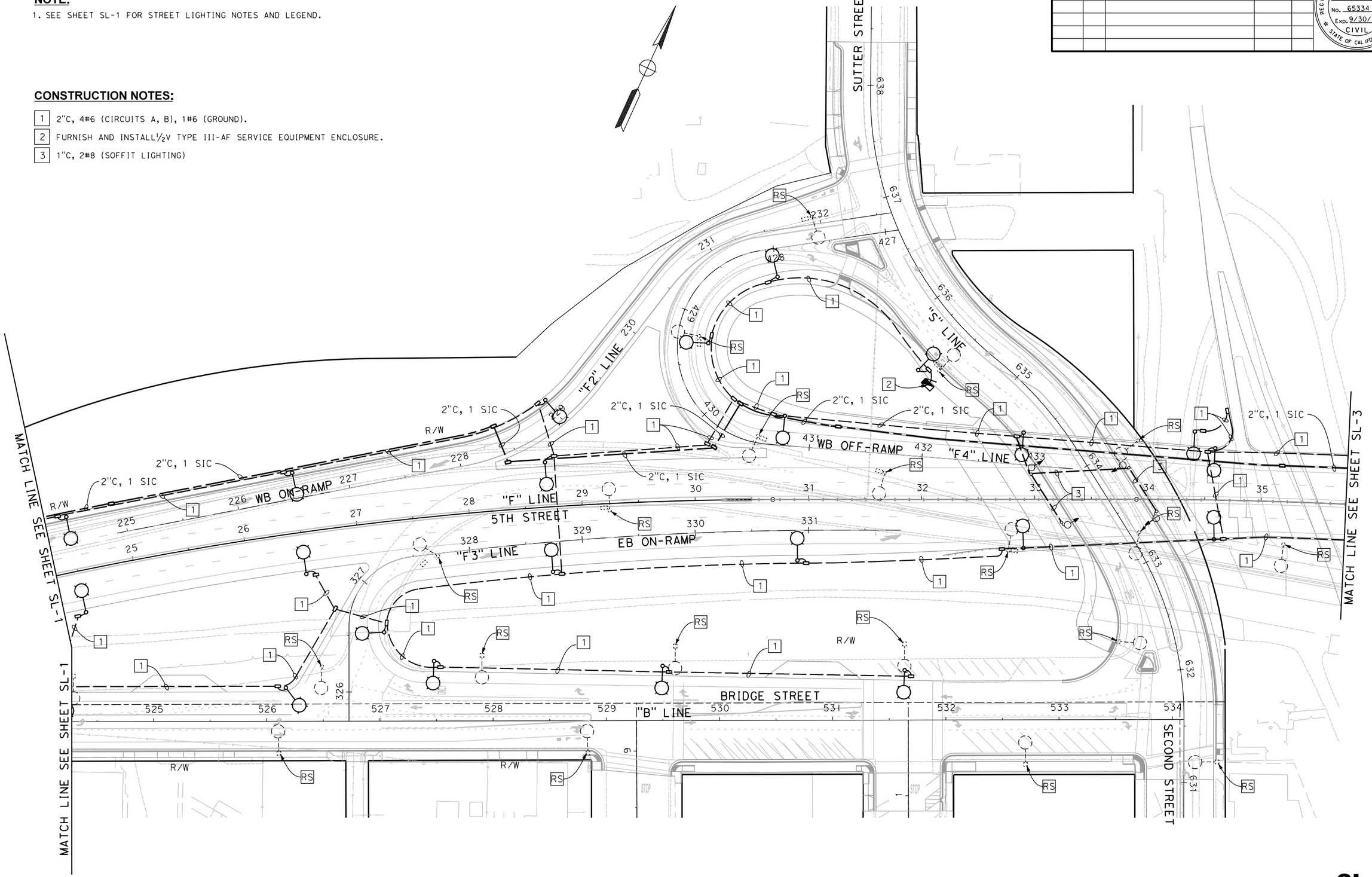

FOR REDUCED PLANS
ORIGINAL SCALE IS IN INCHES

0 1 2 3

ALL DIMENSIONS SHOWN IN FEET
UNLESS OTHERWISE NOTED

THIS PLAN APPROVED FOR ELECTRICAL WORK ONLY.

SL-2

REVISION #	DATE:	DESCRIPTION AND SHEET NO.:	APPROVED BY:	DATE:

REGISTERED PROFESSIONAL ENGINEER
JOSE J. OSTDIEK
No. 65334
Exp. 9/30/17
CIVIL
STATE OF CALIFORNIA

PLAN SCALE: 1"=40'
PROFILE SCALE:
HORIZ:
VERT:

CONTRACT NO: 17-XX
DESIGNED: J. OSTDIEK
DRAWN: J. RODRIGUEZ
CHECKED:
RECORD DRAWING: DATE:

DOKKEN ENGINEERING
110 BLUE RAVINE ROAD #200
FOLSOM, CA 95630
PHONE: (916) 858-0642
FAX: (916) 858-0643

CITY OF
YUBA CITY

5TH STREET BRIDGE REPLACEMENT
STREET AND BRIDGE LIGHTING
PLAN - SIGNAL INTERCONNECT

SHEET NO.
OF
215

8/15/2016

...\511\1858ua0009.dgn

REVISION #	DATE:	DESCRIPTION AND SHEET NO.:	APPROVED BY:	DATE:

REGISTERED PROFESSIONAL ENGINEER
JOSE J. OSTDIEK
No. 65334
Exp. 9/30/17
CIVIL
STATE OF CALIFORNIA

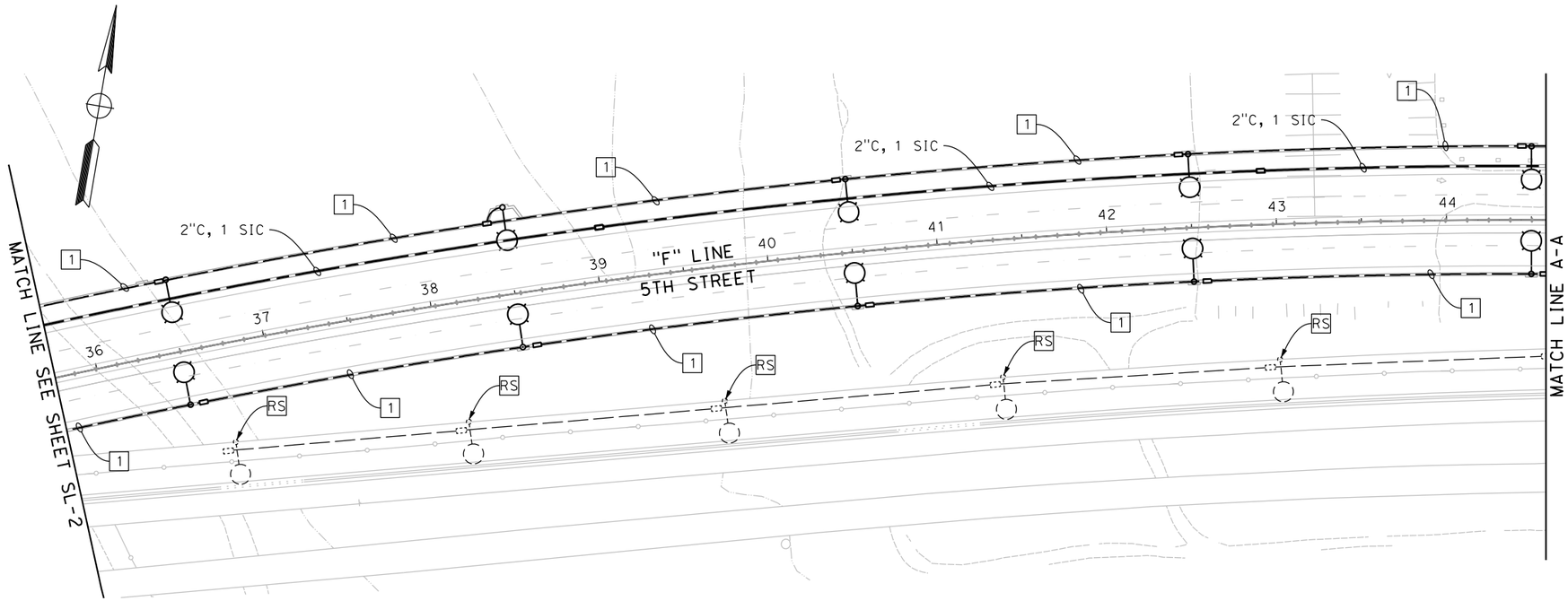

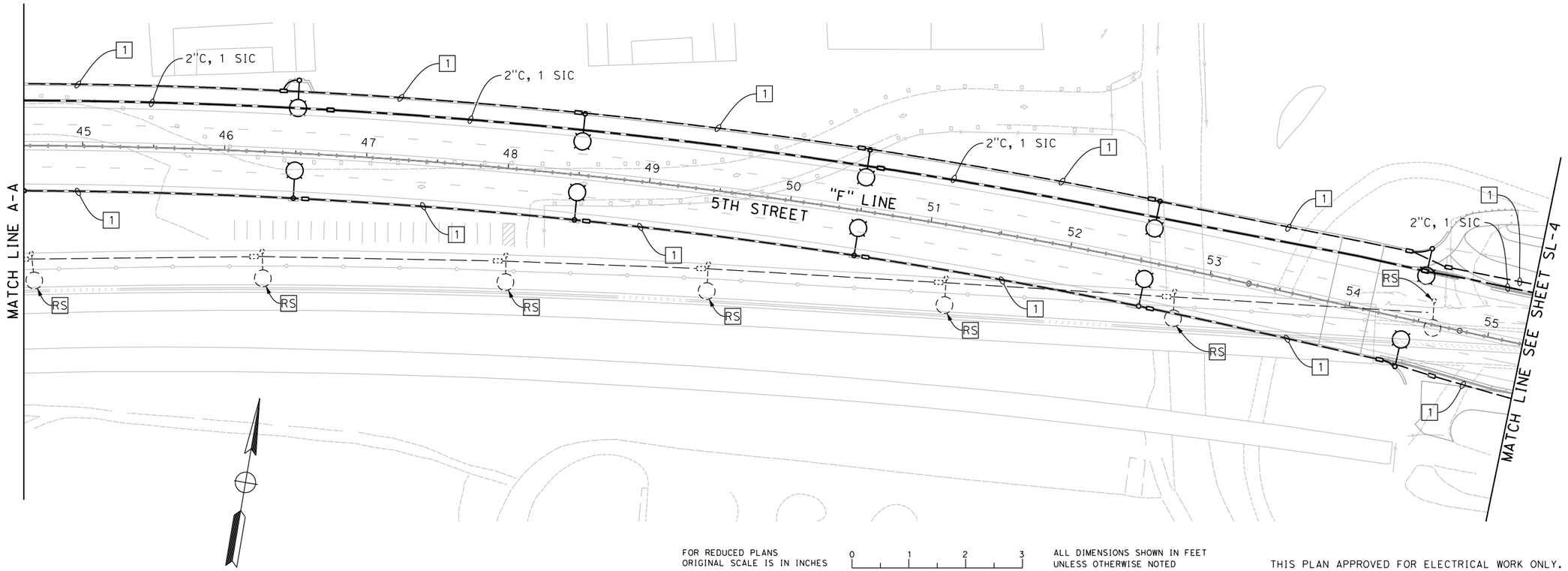

NOTE:

1. SEE SHEET SL-1 FOR STREET LIGHTING NOTES AND LEGEND.

CONSTRUCTION NOTES:

[1] 2"C, 4#6 (CIRCUITS A, B), 1#6 (GROUND).

FOR REDUCED PLANS
ORIGINAL SCALE IS IN INCHES

0 1 2 3

ALL DIMENSIONS SHOWN IN FEET
UNLESS OTHERWISE NOTED

THIS PLAN APPROVED FOR ELECTRICAL WORK ONLY.

SL-3

PLAN SCALE: 1"=40'
PROFILE SCALE:
HORIZ:
VERT:

CONTRACT NO: 17-XX
DESIGNED: J. OSTDIEK
DRAWN: J. RODRIGUEZ
CHECKED:
RECORD DRAWING:
DATE:

DOKKEN ENGINEERING
110 BLUE RAVINE ROAD #200
FOLSOM, CA 95630
PHONE: (916) 858-0642
FAX: (916) 858-0643

CITY OF
YUBA CITY

5TH STREET BRIDGE REPLACEMENT
STREET AND BRIDGE LIGHTING
PLAN - SIGNAL INTERCONNECT

SHEET NO.
OF
215

8/15/2016

...\5I1\1858ua0010.dgn

NOTE:

1. SEE SHEET SL-1 FOR STREET LIGHTING NOTES AND LEGEND.

CONSTRUCTION NOTES:

1. 2"C, 4#6 (CIRCUITS A, B), 1#6 (GROUND).
2. FURNISH AND INSTALL ½V TYPE III-AF SERVICE EQUIPMENT ENCLOSURE.
3. 2"c, 2#8 (CIRCUIT C), 1#8 (GROUND).

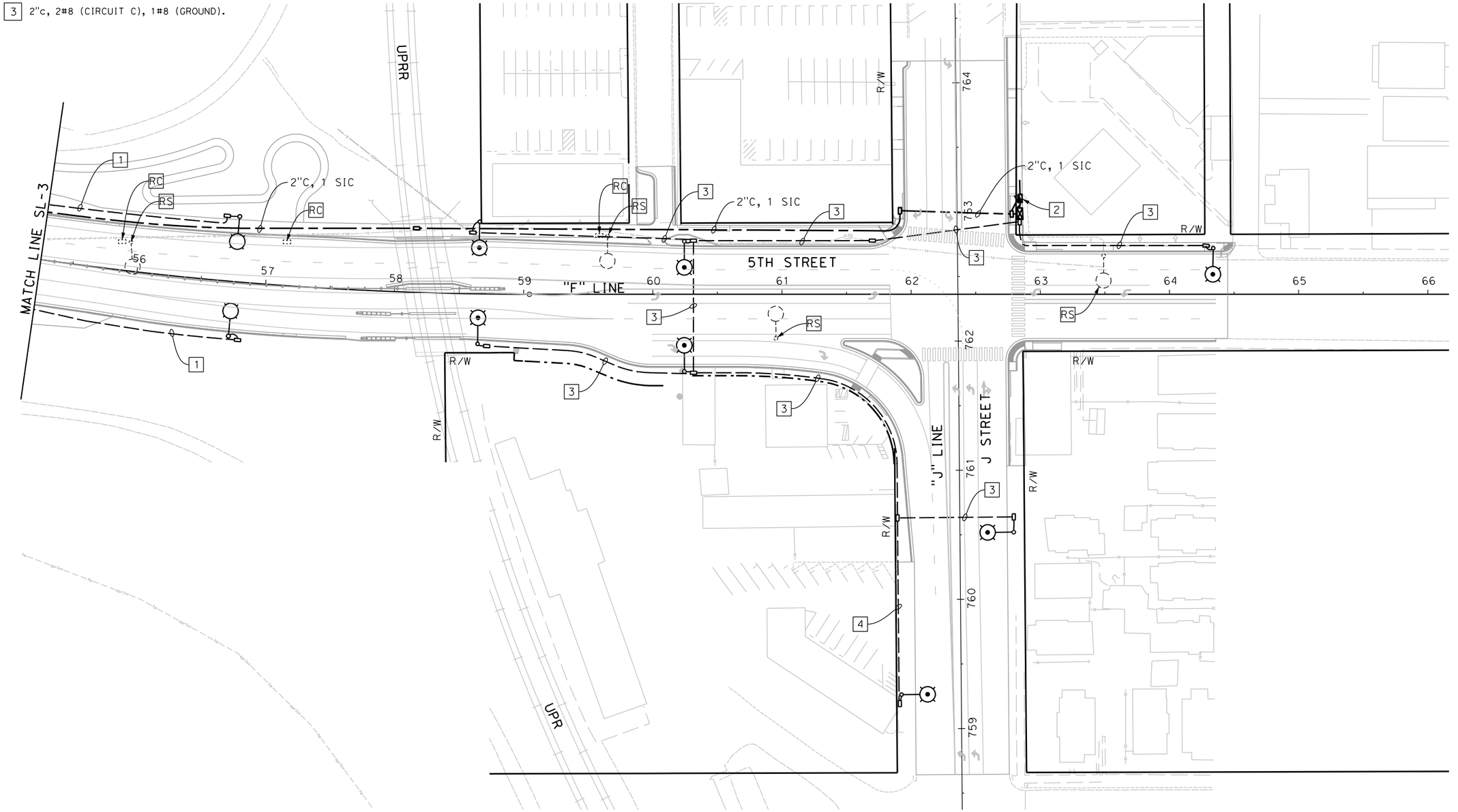

REVISION #	DATE:	DESCRIPTION AND SHEET NO.:	APPROVED BY:	DATE:

REGISTERED PROFESSIONAL ENGINEER
JOSE J. OSTDIEK
No. 65334
Exp. 9/30/17
CIVIL
STATE OF CALIFORNIA

PLAN SCALE: 1"=40'
PROFILE SCALE:
HORIZ:
VERT:

CONTRACT NO: 17-XX
DESIGNED: J. OSTDIEK
DRAWN: J. RODRIGUEZ
CHECKED:
RECORD DRAWING:
DATE:

DOKKEN ENGINEERING
110 BLUE RAVINE ROAD #200
FOLSOM, CA 95630
PHONE: (916) 858-0642
FAX: (916) 858-0643

CITY OF YUBA CITY

5TH STREET BRIDGE REPLACEMENT
STREET AND BRIDGE LIGHTING
PLAN - SIGNAL INTERCONNECT

SHEET NO. 4 OF 215

SL-4

FOR REDUCED PLANS
ORIGINAL SCALE IS IN INCHES
0 1 2 3

ALL DIMENSIONS SHOWN IN FEET
UNLESS OTHERWISE NOTED

THIS PLAN APPROVED FOR ELECTRICAL WORK ONLY.

8/15/2016

...\511\1858ua011.dgn

DIST	COUNTY	ROUTE	POST MILES TOTAL PROJECT	SHEET No	TOTAL SHEETS
03	Sut/Yub	Local			

REGISTERED CIVIL ENGINEER DATE

PLANS APPROVAL DATE

REGISTERED PROFESSIONAL ENGINEER
ROSA GRIGGS
No. 54169
Exp. 12-31-17
CIVIL
STATE OF CALIFORNIA

CITY OF YUBA CITY
1201 CIVIC CENTER BOULEVARD
YUBA CITY, CA 95993

Dokken Engineering
110 Blue Ravine Rd, Suite 200
Folsom, CA 95630 (916) 858-0642

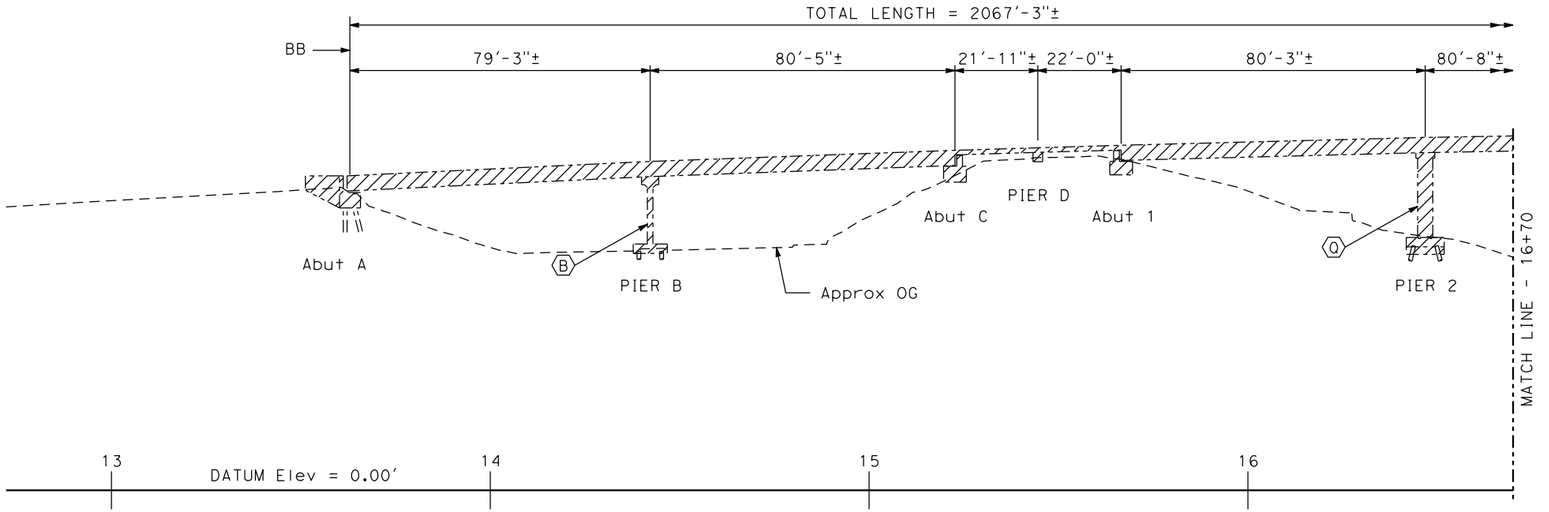

DEVELOPED ELEVATION

1" = 20'

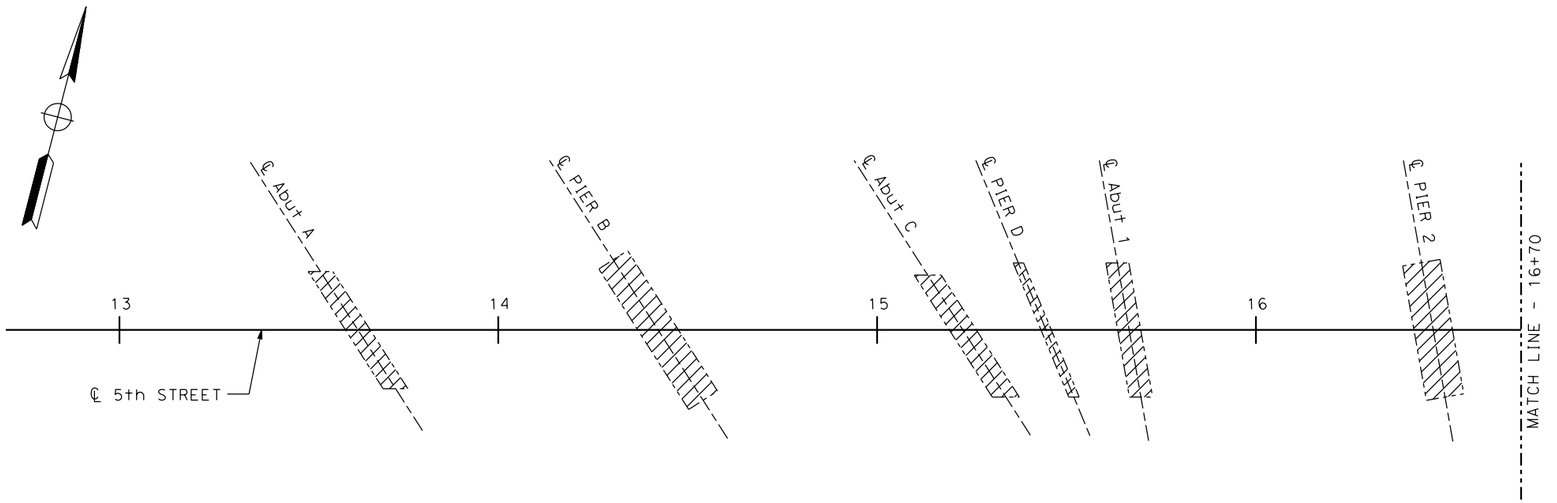

PLAN

1" = 20'

LEGEND

DENOTES EXISTING BRIDGE REMOVAL

DESIGN OVERSIGHT		DESIGN	BY R. Griggs	CHECKED T. Osterkamp	PREPARED FOR THE STATE OF CALIFORNIA DEPARTMENT OF TRANSPORTATION
SIGN OFF DATE		DETAILS	BY K. Dang	CHECKED	
		QUANTITIES	BY	CHECKED	

T. Osterkamp
PROJECT ENGINEER

BRIDGE NO. 18C-0012
POST MILES

BRIDGE NO. 18C-0055 BRIDGE NO. 18C-0012
2nd & 5th BRIDGE REMOVAL NO. 1

DESIGN DETAIL SHEET (ENGLISH) (REV.7/16/10)

ORIGINAL SCALE IN INCHES FOR REDUCED PLANS 0 1 2 3

UNIT:
PROJECT NUMBER & PHASE: CONTRACT NO.:

DISREGARD PRINTS BEARING EARLIER REVISION DATES →

REVISION DATES				SHEET	OF
-					

FILE => J:\1858_5th_St_BR\517\REMOVAL\2nd_5th_REMOVAL\1858RM01.dgn

USERNAME => untitled DATE PLOTTED => 8/15/2016 TIME PLOTTED => 8:56:40 AM

DIST	COUNTY	ROUTE	POST MILES TOTAL PROJECT	SHEET No	TOTAL SHEETS
03	Sut/Yub	Local			

REGISTERED CIVIL ENGINEER _____ DATE _____

PLANS APPROVAL DATE _____

REGISTERED PROFESSIONAL ENGINEER
ROSA GRIGGS
No. 54169
Exp. 12-31-17
CIVIL
STATE OF CALIFORNIA

CITY OF YUBA CITY
1201 CIVIC CENTER BOULEVARD
YUBA CITY, CA 95993

Dokken Engineering
110 Blue Ravine Rd, Suite 200
Folsom, CA 95630 (916) 858-0642

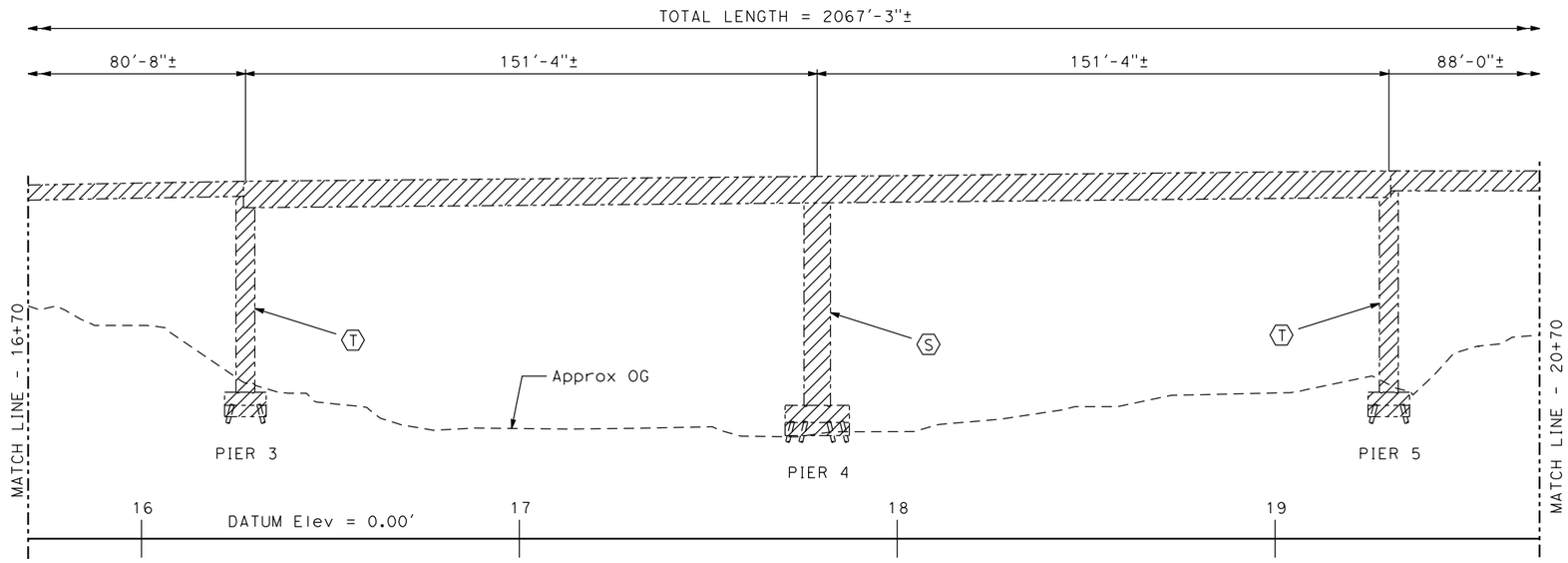

DEVELOPED ELEVATION

1" = 20'

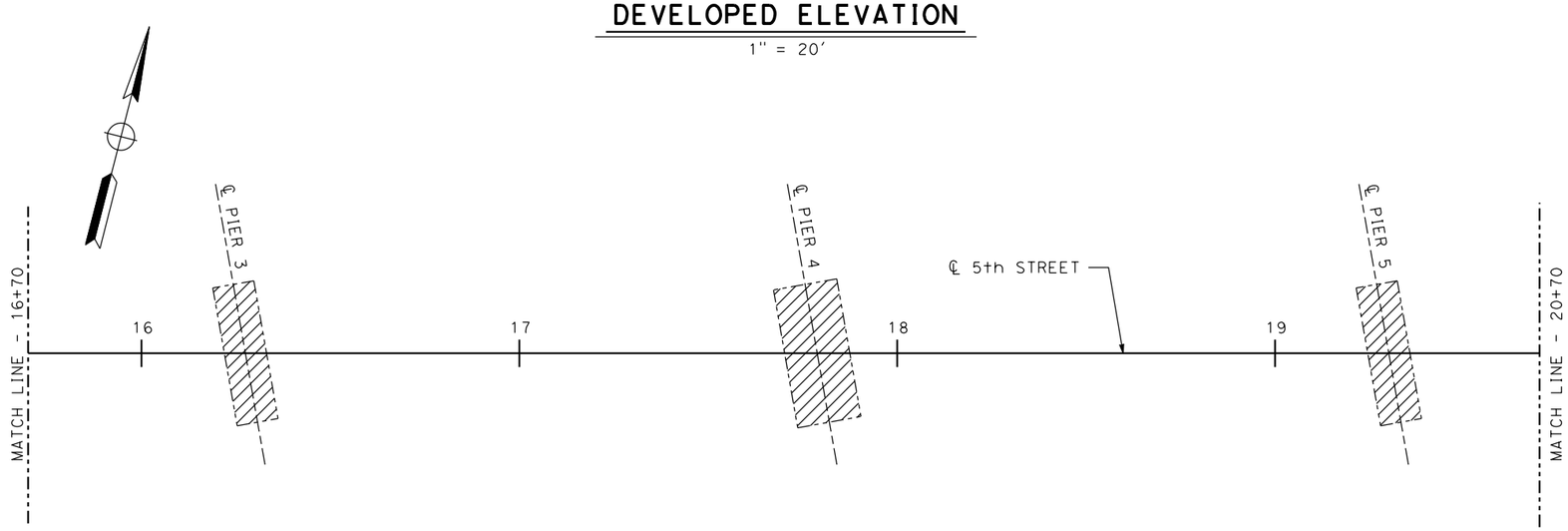

PLAN

1" = 20'

LEGEND

▨ DENOTES EXISTING BRIDGE REMOVAL

DESIGN OVERSIGHT		DESIGN	BY R. Griggs	CHECKED T. Osterkamp	PREPARED FOR THE STATE OF CALIFORNIA DEPARTMENT OF TRANSPORTATION
SIGN OFF DATE		DETAILS	BY K. Dang	CHECKED	
		QUANTITIES	BY	CHECKED	

T. Osterkamp
PROJECT ENGINEER

BRIDGE NO. 18C-0012
POST MILES

BRIDGE NO. 18C-0055 BRIDGE NO. 18C-0012 2nd & 5th BRIDGE REMOVAL NO. 2

DESIGN DETAIL SHEET (ENGLISH) (REV.7/16/10)

ORIGINAL SCALE IN INCHES FOR REDUCED PLANS 0 1 2 3

UNIT:
PROJECT NUMBER & PHASE: CONTRACT NO.:

DISREGARD PRINTS BEARING EARLIER REVISION DATES →

REVISION DATES				SHEET	OF
-					

FILE => J:\1858_5th_St_BR\517\REMOVAL\2nd_5th_REMOVAL\1858RM02.dgn

USERNAME => unfiled DATE PLOTTED => 8/15/2016 TIME PLOTTED => 8:56:51 AM

DIST	COUNTY	ROUTE	POST MILES TOTAL PROJECT	SHEET No	TOTAL SHEETS
03	Sut/Yub	Local			

REGISTERED CIVIL ENGINEER _____ DATE _____

PLANS APPROVAL DATE _____

REGISTERED PROFESSIONAL ENGINEER
ROSA GRIGGS
No. 54169
Exp. 12-31-17
CIVIL
STATE OF CALIFORNIA

CITY OF YUBA CITY
1201 CIVIC CENTER BOULEVARD
YUBA CITY, CA 95993

Dokken Engineering
110 Blue Ravine Rd, Suite 200
Folsom, CA 95630 (916) 858-0642

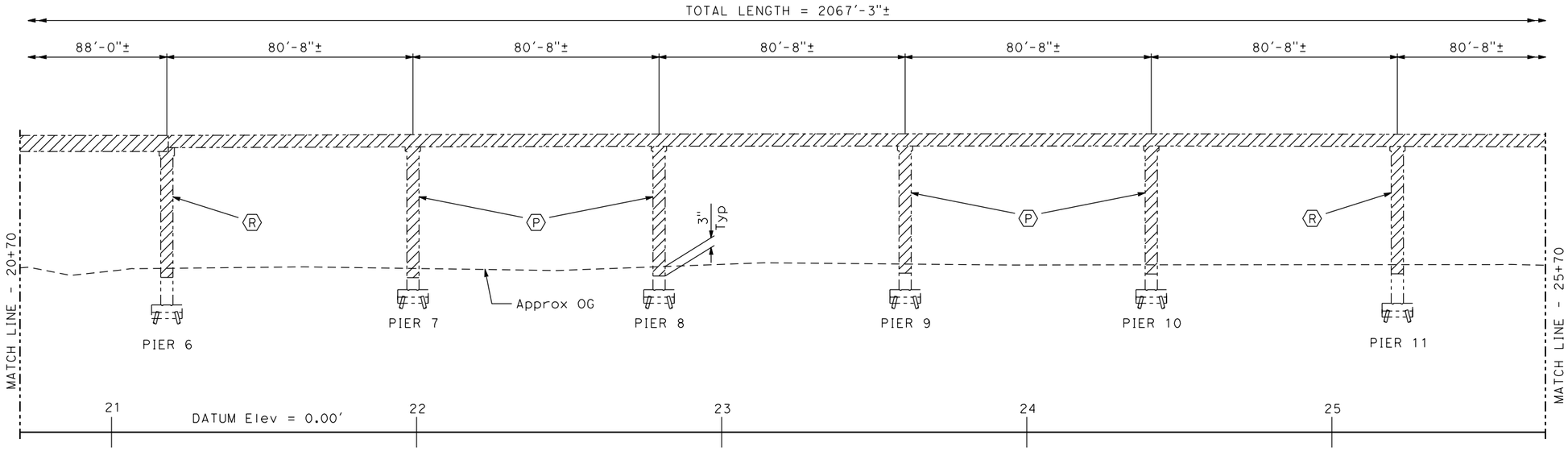

DEVELOPED ELEVATION

1" = 20'

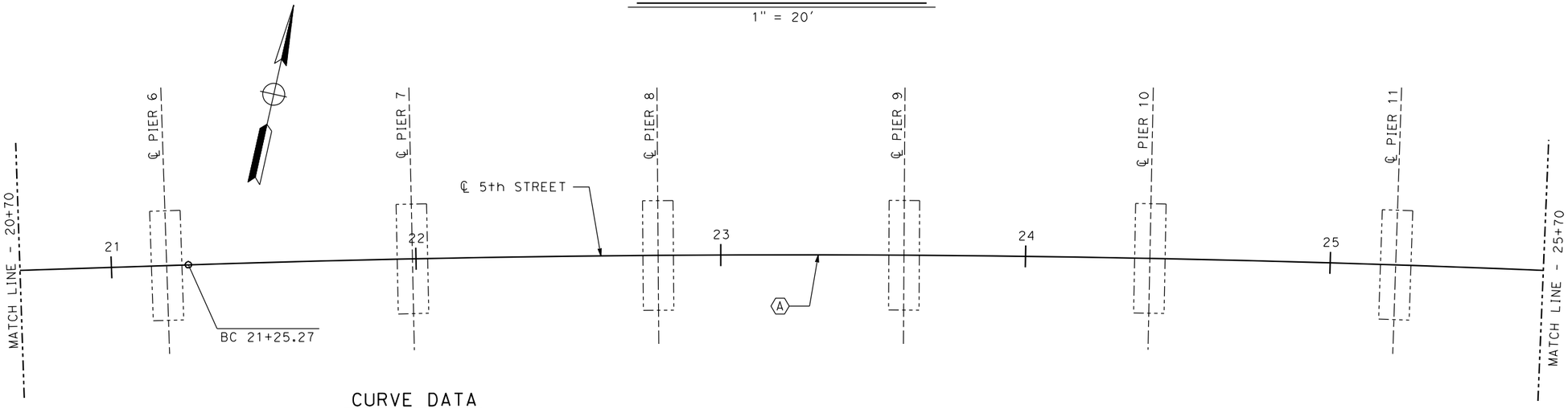

CURVE DATA

(A)

R = 6000.00'
△ = 8°13'17"
T = 431.21'
L = 860.94'

PLAN

1" = 20'

LEGEND

▨ DENOTES EXISTING BRIDGE REMOVAL

DESIGN OVERSIGHT		DESIGN	BY R. Griggs	CHECKED T. Osterkamp	PREPARED FOR THE STATE OF CALIFORNIA DEPARTMENT OF TRANSPORTATION	T. Osterkamp PROJECT ENGINEER	BRIDGE NO. 18C-0012 POST MILES	BRIDGE NO. 18C-0055 BRIDGE NO. 18C-0012 2nd & 5th BRIDGE REMOVAL NO. 3
SIGN OFF DATE		DETAILS	BY K. Dang	CHECKED				
		QUANTITIES	BY	CHECKED				

DESIGN DETAIL SHEET (ENGLISH) (REV.7/16/10)

ORIGINAL SCALE IN INCHES FOR REDUCED PLANS 0 1 2 3

UNIT: PROJECT NUMBER & PHASE: CONTRACT NO.:

DISREGARD PRINTS BEARING EARLIER REVISION DATES →

REVISION DATES | SHEET | OF

FILE => J:\1858_5th_St_BR\517\REMOVAL\2nd_5th_REMOVAL\1858RM03.dgn

USERNAME => untitled DATE PLOTTED => 8/15/2016 TIME PLOTTED => 8:57:00 AM

DIST	COUNTY	ROUTE	POST MILES TOTAL PROJECT	SHEET No	TOTAL SHEETS
03	Sut/Yub	Local			

REGISTERED CIVIL ENGINEER _____ DATE _____

PLANS APPROVAL DATE _____

REGISTERED PROFESSIONAL ENGINEER
ROSA GRIGGS
No. 54169
Exp. 12-31-17
CIVIL
STATE OF CALIFORNIA

CITY OF YUBA CITY
1201 CIVIC CENTER BOULEVARD
YUBA CITY, CA 95993

Dokken Engineering
110 Blue Ravine Rd, Suite 200
Folsom, CA 95630 (916) 858-0642

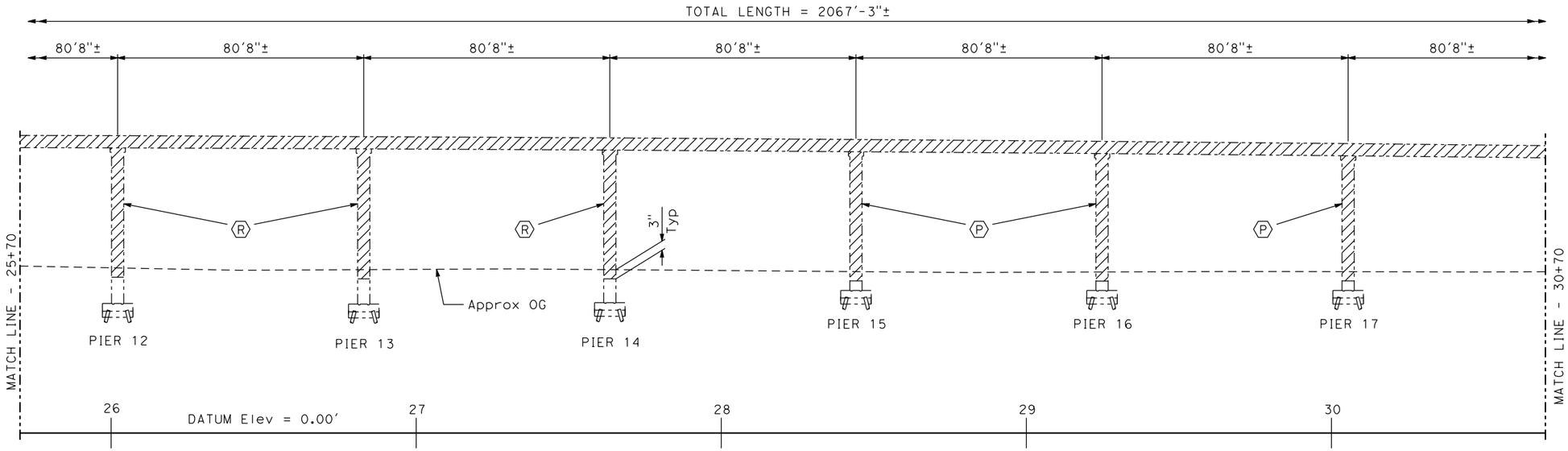

DEVELOPED ELEVATION

1" = 20'

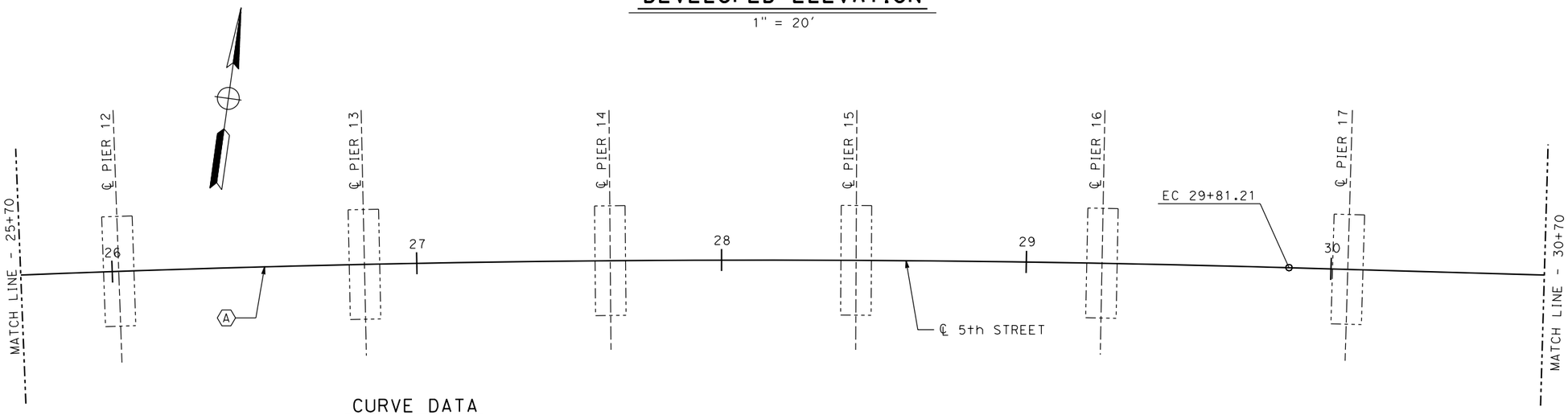

CURVE DATA

(A)

R = 6000.00'
△ = 8°13'17"
T = 431.21'
L = 860.94'

PLAN

1" = 20'

LEGEND

▨ DENOTES EXISTING BRIDGE REMOVAL

DESIGN OVERSIGHT		DESIGN	BY R. Griggs	CHECKED T. Osterkamp	PREPARED FOR THE STATE OF CALIFORNIA DEPARTMENT OF TRANSPORTATION
SIGN OFF DATE		DETAILS	BY K. Dang	CHECKED	
		QUANTITIES	BY	CHECKED	

T. Osterkamp
PROJECT ENGINEER

BRIDGE NO. 18C-0012
POST MILES

BRIDGE NO. 18C-0055 BRIDGE NO. 18C-0012
2nd & 5th BRIDGE REMOVAL NO. 4

DESIGN DETAIL SHEET (ENGLISH) (REV.7/16/10)

ORIGINAL SCALE IN INCHES FOR REDUCED PLANS 0 1 2 3

UNIT:
PROJECT NUMBER & PHASE: CONTRACT NO.:

DISREGARD PRINTS BEARING EARLIER REVISION DATES →

REVISION DATES					SHEET	OF
-						

FILE => J:\1858_5th_St_BR\517\REMOVAL\2nd_5th_REMOVAL\1858RM04.dgn

USERNAME => untitled DATE PLOTTED => 8/15/2016 TIME PLOTTED => 8:57:08 AM

DIST	COUNTY	ROUTE	POST MILES TOTAL PROJECT	SHEET No	TOTAL SHEETS
03	Sut/Yub	Local			

REGISTERED CIVIL ENGINEER _____ DATE _____

PLANS APPROVAL DATE _____

REGISTERED PROFESSIONAL ENGINEER
ROSA GRIGGS
No. 54169
Exp. 12-31-17
CIVIL
STATE OF CALIFORNIA

CITY OF YUBA CITY
1201 CIVIC CENTER BOULEVARD
YUBA CITY, CA 95993

Dokken Engineering
110 Blue Ravine Rd, Suite 200
Folsom, CA 95630 (916) 858-0642

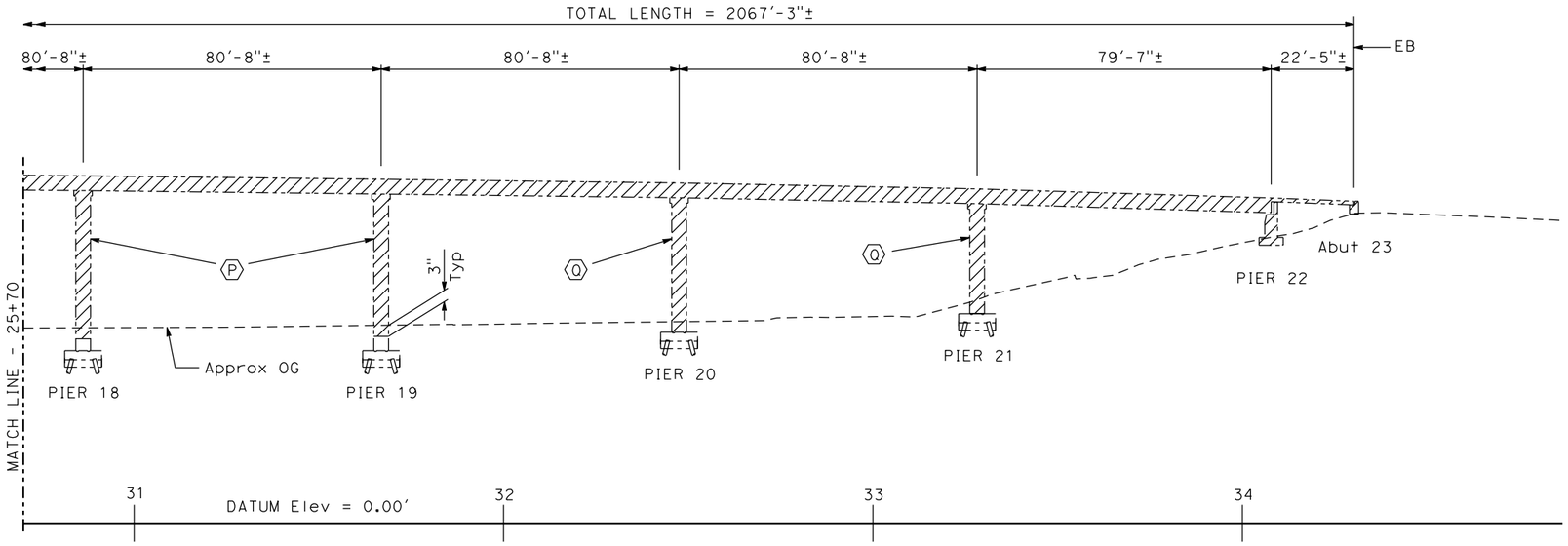

DEVELOPED ELEVATION

1" = 20'

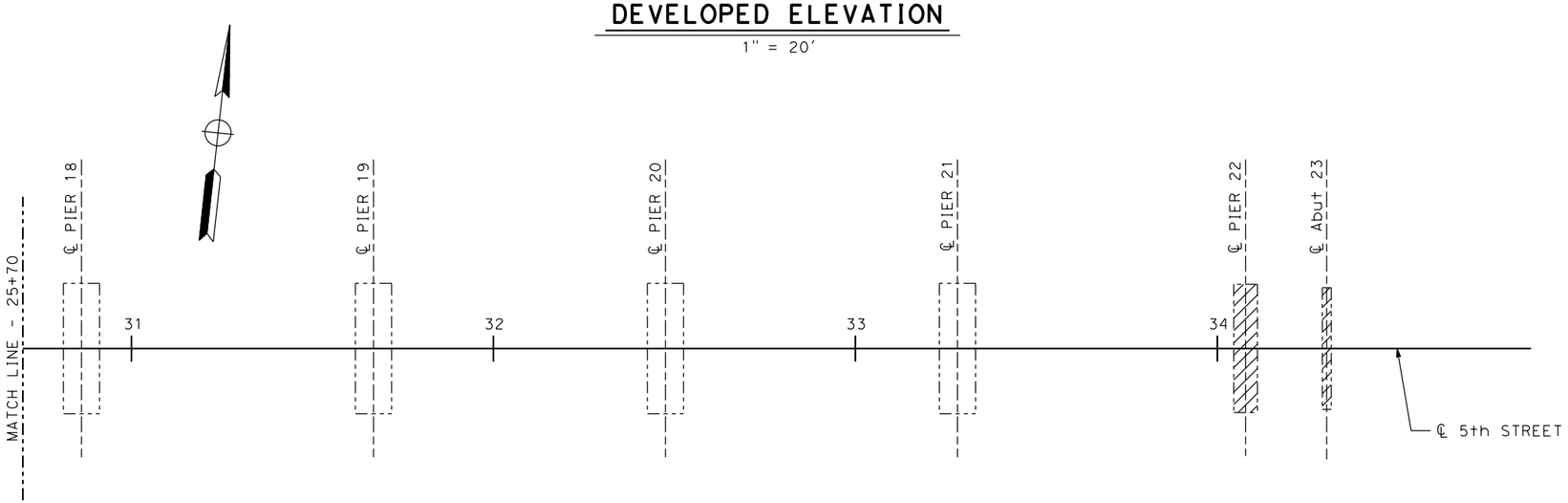

PLAN

1" = 20'

LEGEND

▨ DENOTES EXISTING BRIDGE REMOVAL

DESIGN OVERSIGHT		DESIGN	BY R. Griggs	CHECKED T. Osterkamp	PREPARED FOR THE STATE OF CALIFORNIA DEPARTMENT OF TRANSPORTATION
SIGN OFF DATE		DETAILS	BY K. Dang	CHECKED	
		QUANTITIES	BY	CHECKED	

T. Osterkamp
PROJECT ENGINEER

BRIDGE NO. 18C-0012
POST MILES

BRIDGE NO. 18C-0055 BRIDGE NO. 18C-0012 2nd & 5th BRIDGE REMOVAL NO. 5

DESIGN DETAIL SHEET (ENGLISH) (REV.7/16/10)

ORIGINAL SCALE IN INCHES FOR REDUCED PLANS 0 1 2 3

UNIT:
PROJECT NUMBER & PHASE: CONTRACT NO.:

DISREGARD PRINTS BEARING EARLIER REVISION DATES →

REVISION DATES					SHEET	OF
-						

FILE => J:\1858_5th_St_BR\517\REMOVAL\2nd_5th_REMOVAL\1858RM05.dgn

USERNAME => untitled DATE PLOTTED => 8/15/2016 TIME PLOTTED => 8:57:15 AM

DIST	COUNTY	ROUTE	POST MILES TOTAL PROJECT	SHEET No	TOTAL SHEETS
03	Sut/Yub	Local			

REGISTERED CIVIL ENGINEER DATE

PLANS APPROVAL DATE

REGISTERED PROFESSIONAL ENGINEER
ROSA GRIGGS
No. 54169
Exp. 12-31-17
CIVIL
STATE OF CALIFORNIA

CITY OF YUBA CITY
1201 CIVIC CENTER BOULEVARD
YUBA CITY, CA 95993

Dokken Engineering
110 Blue Ravine Rd, Suite 200
Folsom, CA 95630 (916) 858-0642

LEGEND

▨ DENOTES EXISTING BRIDGE REMOVAL

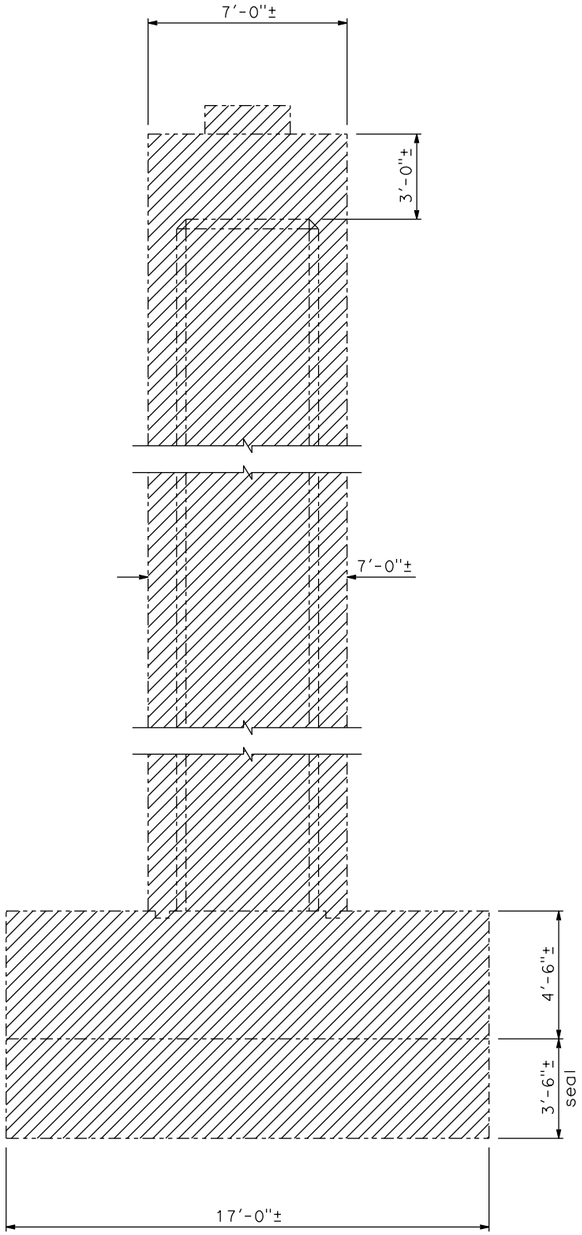

PIER TYPE S
3/8" = 1'

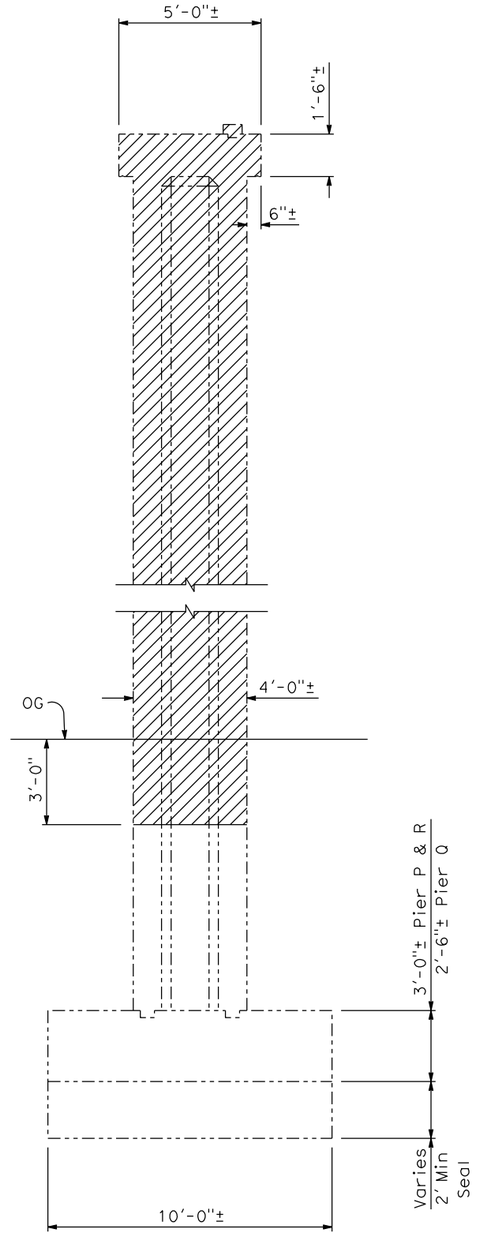

PIER TYPES P, Q, & R
3/8" = 1'

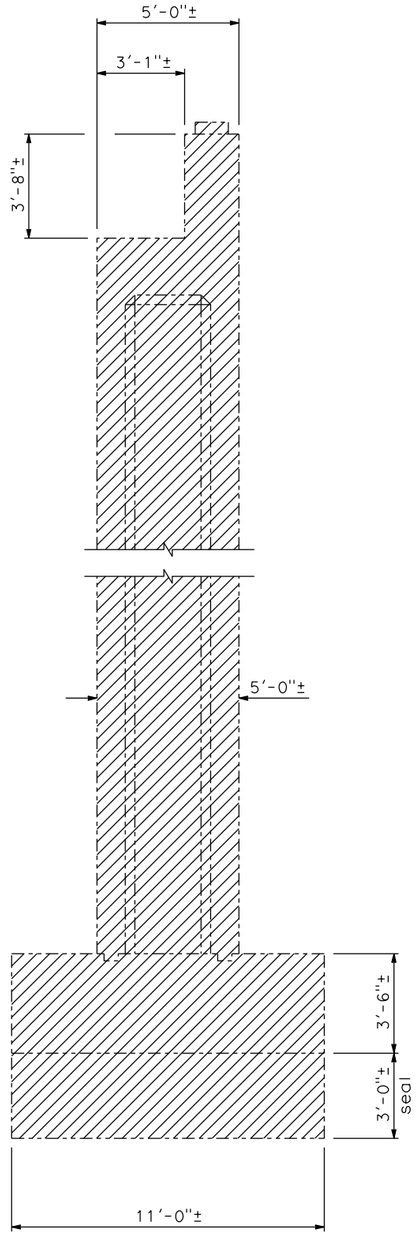

PIER TYPE T
3/8" = 1'

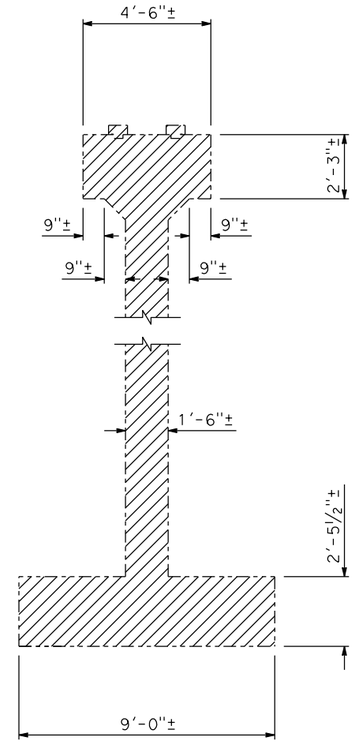

PIER B
3/8" = 1'

DESIGN OVERSIGHT		DESIGN	BY R. Griggs	CHECKED T. Osterkamp	PREPARED FOR THE STATE OF CALIFORNIA DEPARTMENT OF TRANSPORTATION
SIGN OFF DATE		DETAILS	BY K. Dang	CHECKED	T. Osterkamp PROJECT ENGINEER
DESIGN DETAIL SHEET (ENGLISH) (REV.7/16/10)		QUANTITIES	BY	CHECKED	BRIDGE NO. 18C-0012 POST MILES

ORIGINAL SCALE IN INCHES FOR REDUCED PLANS 0 1 2 3

UNIT:
PROJECT NUMBER & PHASE: CONTRACT NO.:

DISREGARD PRINTS BEARING EARLIER REVISION DATES →

REVISION DATES				SHEET	OF
-					

BRIDGE NO. 18C-0055 BRIDGE NO. 18C-0012
2nd & 5th BRIDGE REMOVAL NO. 6

FILE => J:\1858_5th_St_BR\517\REMOVAL\2nd_5th_REMOVAL\1858RM06.dgn

USERNAME => untitled DATE PLOTTED => 8/15/2016 TIME PLOTTED => 8:57:20 AM

DIST	COUNTY	ROUTE	POST MILES TOTAL PROJECT	SHEET No	TOTAL SHEETS
03	Sut/Yub	Local			

REGISTERED CIVIL ENGINEER _____ DATE _____

PLANS APPROVAL DATE _____

REGISTERED PROFESSIONAL ENGINEER
ROSA GRIGGS
No. 54169
Exp. 12-31-17
CIVIL
STATE OF CALIFORNIA

CITY OF YUBA CITY
1201 CIVIC CENTER BOULEVARD
YUBA CITY, CA 95993

Dokken Engineering
110 Blue Ravine Rd, Suite 200
Folsom, CA 95630 (916) 858-0642

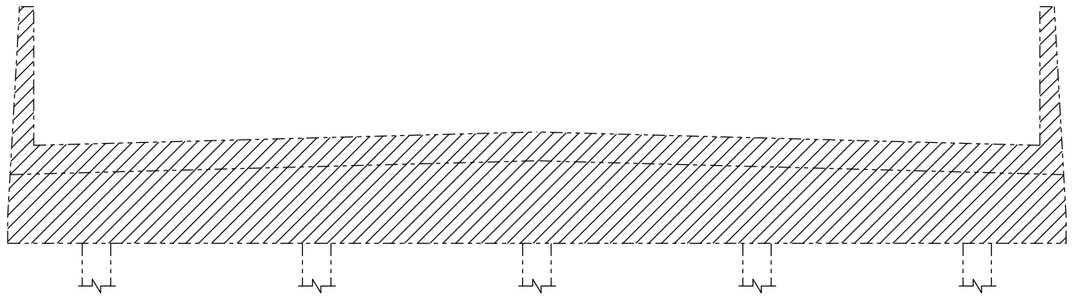

ABUTMENT 23, ELEVATION
3/8" = 1'

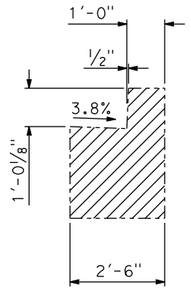

ABUTMENT 23, SECTION
3/8" = 1'

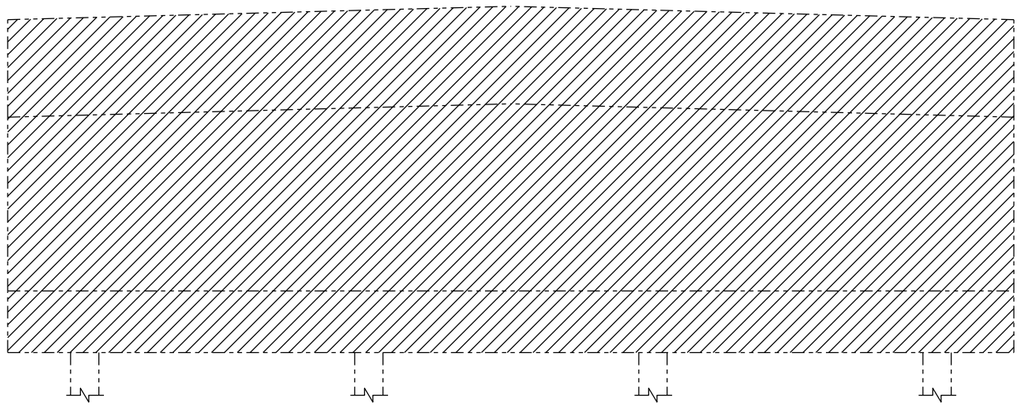

PIER 22, ELEVATION
3/8" = 1'

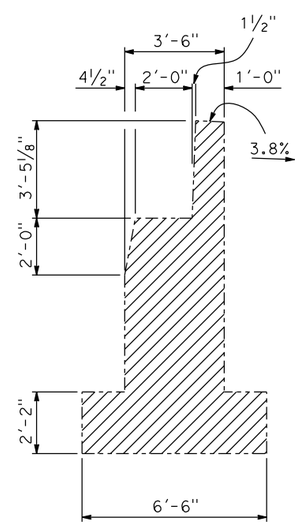

PIER 22, SECTION
3/8" = 1'

LEGEND

▨ DENOTES EXISTING BRIDGE REMOVAL

DESIGN OVERSIGHT		DESIGN	BY R. Griggs	CHECKED T. Osterkamp	PREPARED FOR THE STATE OF CALIFORNIA DEPARTMENT OF TRANSPORTATION
SIGN OFF DATE		DETAILS	BY K. Dang	CHECKED	T. Osterkamp, PROJECT ENGINEER
		QUANTITIES	BY	CHECKED	BRIDGE NO. 18C-0012, POST MILES

BRIDGE NO. 18C-0055 BRIDGE NO. 18C-0012
2nd & 5th BRIDGE REMOVAL NO. 7

DESIGN DETAIL SHEET (ENGLISH) (REV.7/16/10)

ORIGINAL SCALE IN INCHES FOR REDUCED PLANS 0 1 2 3

UNIT: PROJECT NUMBER & PHASE: CONTRACT NO.:

DISREGARD PRINTS BEARING EARLIER REVISION DATES →

REVISION DATES				SHEET	OF
-					

FILE => J:\1858_5th_St_BR\517\REMOVAL\2nd_5th_REMOVAL\1858RM07.dgn

USERNAME => untitled DATE PLOTTED => 8/15/2016 TIME PLOTTED => 8:57:27 AM

DIST	COUNTY	ROUTE	POST MILES TOTAL PROJECT	SHEET No	TOTAL SHEETS
03	Sut/Yub	Local			

REGISTERED CIVIL ENGINEER DATE

PLANS APPROVAL DATE

REGISTERED PROFESSIONAL ENGINEER
ROSA GRIGGS
No. 54169
Exp. 12-31-17
CIVIL
STATE OF CALIFORNIA

CITY OF YUBA CITY
1201 CIVIC CENTER BOULEVARD
YUBA CITY, CA 95993

Dokken Engineering
110 Blue Ravine Rd, Suite 200
Folsom, CA 95630 (916) 858-0642

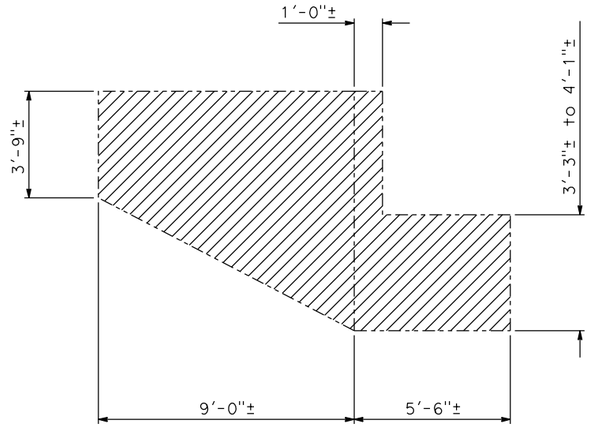

ABUTMENT A
3/8" = 1'

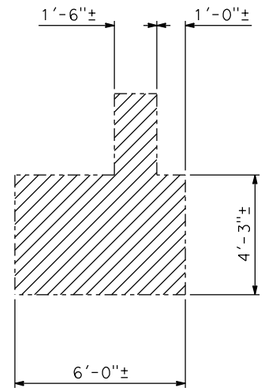

ABUTMENT C
3/8" = 1'

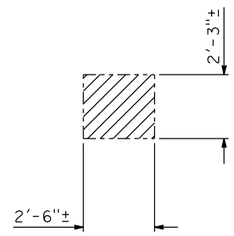

PIER D
3/8" = 1'

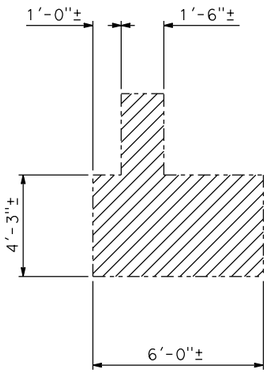

ABUTMENT 1
3/8" = 1'

LEGEND

▨ DENOTES EXISTING BRIDGE REMOVAL

DESIGN OVERSIGHT		DESIGN	BY R. Griggs	CHECKED T. Osterkamp	PREPARED FOR THE STATE OF CALIFORNIA DEPARTMENT OF TRANSPORTATION
SIGN OFF DATE		DETAILS	BY K. Dang	CHECKED	
		QUANTITIES	BY	CHECKED	

T. Osterkamp
PROJECT ENGINEER

BRIDGE NO. 18C-0012
POST MILES

BRIDGE NO. 18C-0055 BRIDGE NO. 18C-0012
2nd & 5th BRIDGE REMOVAL NO. 8

DESIGN DETAIL SHEET (ENGLISH) (REV.7/16/10)

ORIGINAL SCALE IN INCHES FOR REDUCED PLANS 0 1 2 3

UNIT:
PROJECT NUMBER & PHASE: CONTRACT NO.:

DISREGARD PRINTS BEARING EARLIER REVISION DATES →

REVISION DATES					SHEET	OF
-						

FILE => J:\1858_5th_St_BR\517\REMOVAL\2nd_5th_REMOVAL\1858RM08.dgn

USERNAME => untitled DATE PLOTTED => 8/15/2016 TIME PLOTTED => 8:57:35 AM

DIST	COUNTY	ROUTE	POST MILES TOTAL PROJECT	SHEET No	TOTAL SHEETS
03	Sut/Yub	Local			

REGISTERED CIVIL ENGINEER DATE

PLANS APPROVAL DATE

REGISTERED PROFESSIONAL ENGINEER
ROSA GRIGGS
No. 54169
Exp. 12-31-17
CIVIL
STATE OF CALIFORNIA

CITY OF YUBA CITY
1201 CIVIC CENTER BOULEVARD
YUBA CITY, CA 95993

Dokken Engineering
110 Blue Ravine Rd, Suite 200
Folsom, CA 95630 (916) 858-0642

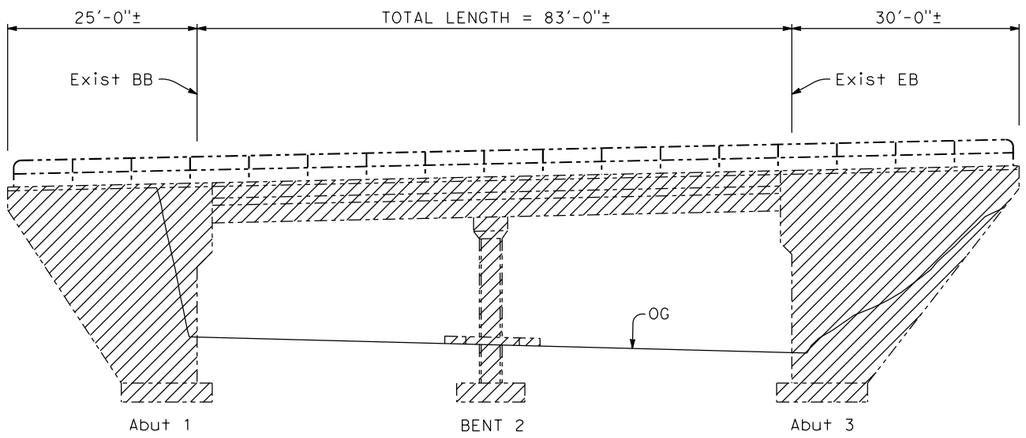

ELEVATION
1" = 10'

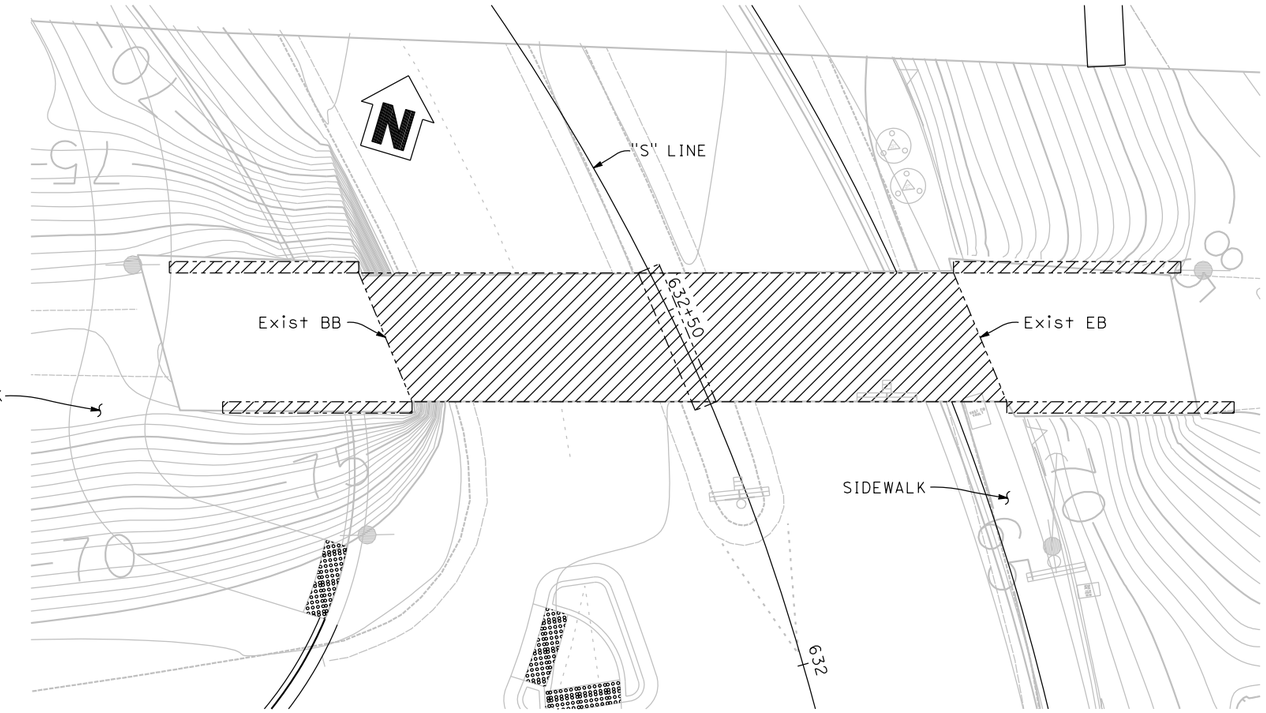

PLAN
1" = 10'

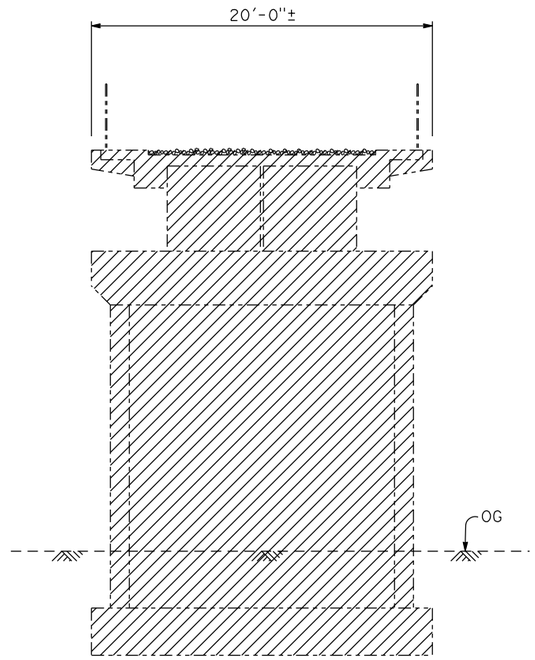

TYPICAL SECTION
1/2" = 1'-0"

LEGEND

DENOTES EXISTING REMOVAL

DESIGN OVERSIGHT		DESIGN	BY R. Griggs	CHECKED T. Osterkamp	PREPARED FOR THE STATE OF CALIFORNIA DEPARTMENT OF TRANSPORTATION	T. Osterkamp PROJECT ENGINEER	BRIDGE NO. 18C-0018 POST MILES	BRIDGE NO. 18C-0018 BRIDGE REMOVAL
SIGN OFF DATE		DETAILS	BY K. Dang	CHECKED				
		QUANTITIES	BY	CHECKED				

DESIGN DETAIL SHEET (ENGLISH) (REV.7/16/10)

ORIGINAL SCALE IN INCHES FOR REDUCED PLANS 0 1 2 3

UNIT: PROJECT NUMBER & PHASE: CONTRACT NO.:

DISREGARD PRINTS BEARING EARLIER REVISION DATES →

REVISION DATES					SHEET	OF
-						

FILE => J:\1858_5th_St_BR\517\REMOVAL\BR_18C-0018\1858_18C-0018_GP01.dgn

USERNAME => untitled DATE PLOTTED => 8/15/2016 TIME PLOTTED => 8:57:46 AM

DIST	COUNTY	ROUTE	POST MILES TOTAL PROJECT	SHEET No	TOTAL SHEETS
03	Sut/Yub	Local			

REGISTERED CIVIL ENGINEER DATE

PLANS APPROVAL DATE

REGISTERED PROFESSIONAL ENGINEER — ROSA GRIGGS — No. 54169 — Exp. 12-31-17 — CIVIL — STATE OF CALIFORNIA

CITY OF YUBA CITY
1201 CIVIC CENTER BOULEVARD
YUBA CITY, CA 95993

Dokken Engineering
110 Blue Ravine Rd, Suite 200
Folsom, CA 95630 (916) 858-0642

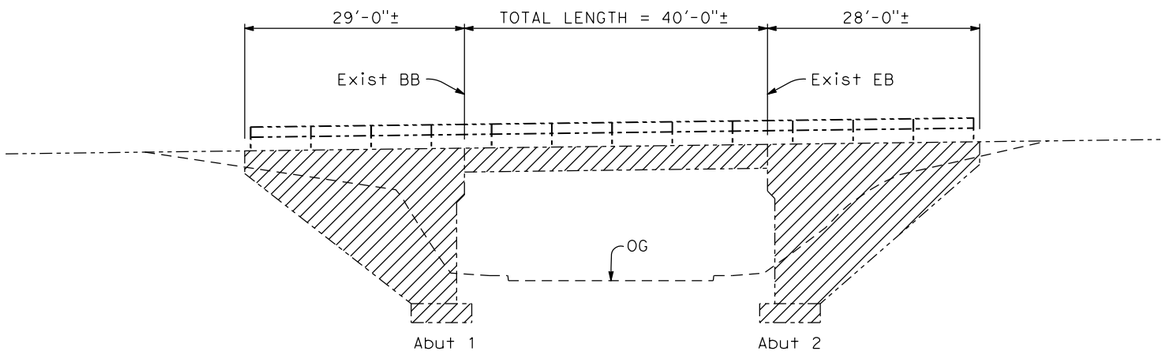

ELEVATION
1" = 10'

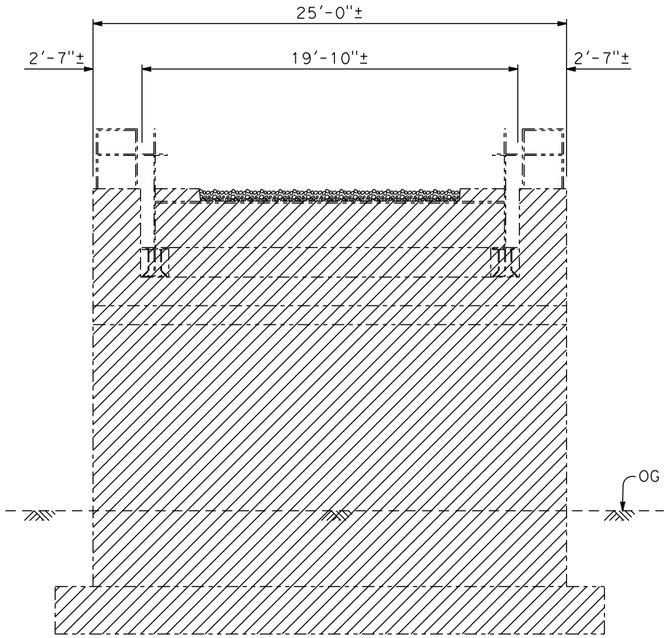

ABUTMENT ELEVATION
1/4" = 1'-0"

PLAN
1" = 10'

LEGEND

DENOTES EXISTING REMOVAL

DESIGN OVERSIGHT		DESIGN BY R. Griggs	CHECKED T. Osterkamp	PREPARED FOR THE STATE OF CALIFORNIA DEPARTMENT OF TRANSPORTATION	T. Osterkamp PROJECT ENGINEER	BRIDGE NO. 18C-0018
SIGN OFF DATE		DETAILS BY K. Dang	CHECKED			POST MILES
		QUANTITIES BY	CHECKED			

BRIDGE NO. 18C-0023
BRIDGE REMOVAL

DESIGN DETAIL SHEET (ENGLISH) (REV.7/16/10)

ORIGINAL SCALE IN INCHES FOR REDUCED PLANS 0 1 2 3

UNIT:
PROJECT NUMBER & PHASE: CONTRACT NO.:

DISREGARD PRINTS BEARING EARLIER REVISION DATES →

REVISION DATES					SHEET	OF
-						

FILE => J:\1858_5th_St_BR\517\REMOVAL\BR_18C-0023\1858_18C-0023_GP01.dgn

USERNAME => untitled DATE PLOTTED => 8/15/2016 TIME PLOTTED => 8:57:57 AM

DIST	COUNTY	ROUTE	POST MILES TOTAL PROJECT	SHEET No	TOTAL SHEETS
03	Sut/Yub	Local			

REGISTERED CIVIL ENGINEER DATE

PLANS APPROVAL DATE

REGISTERED PROFESSIONAL ENGINEER — ROSA GRIGGS — No. 54169 — Exp. 12-31-17 — CIVIL — STATE OF CALIFORNIA

CITY OF YUBA CITY
1201 CIVIC CENTER BOULEVARD
YUBA CITY, CA 95993

Dokken Engineering
110 Blue Ravine Rd, Suite 200
Folsom, CA 95630 (916) 858-0642

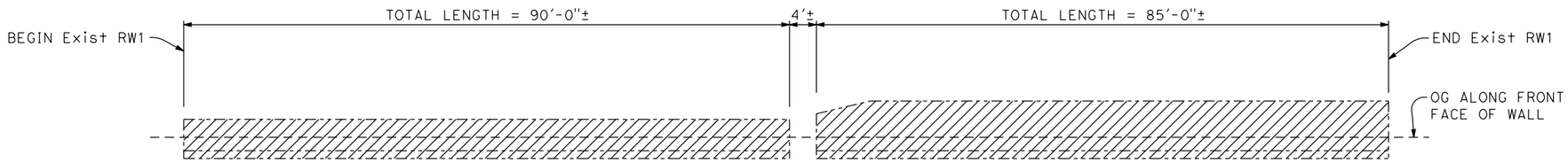

DEVELOPED ELEVATION

1" = 10'

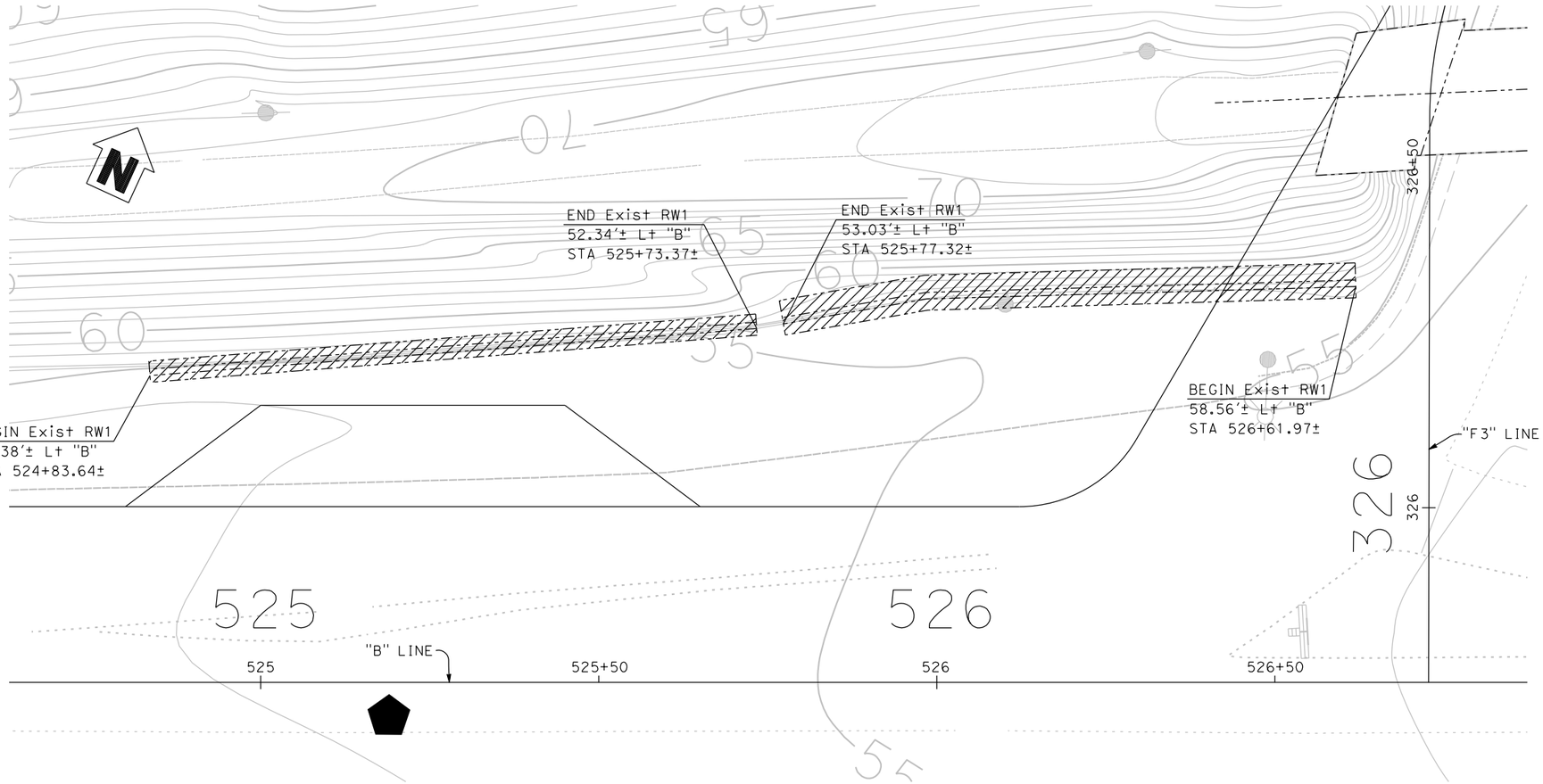

PLAN

1" = 10'

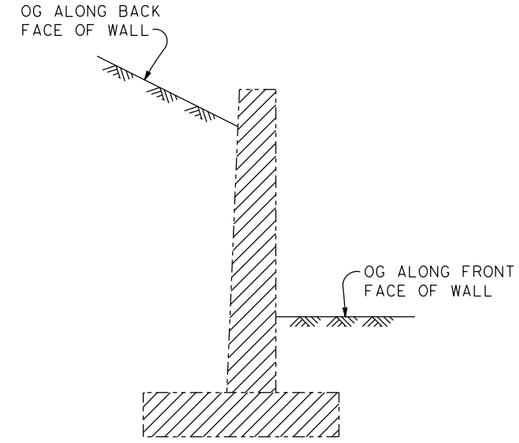

TYPICAL SECTION

½" = 1'-0"

LEGEND

▨ DENOTES EXISTING REMOVAL

DESIGN OVERSIGHT		DESIGN	BY R. Griggs	CHECKED T. Osterkamp	PREPARED FOR THE STATE OF CALIFORNIA DEPARTMENT OF TRANSPORTATION
SIGN OFF DATE		DETAILS	BY K. Dang	CHECKED	
		QUANTITIES	BY	CHECKED	

T. Osterkamp
PROJECT ENGINEER

BRIDGE NO. -
POST MILES

EXISTING RETAINING WALL NO. 1
RETAINING WALL NO. 1 REMOVAL

DESIGN DETAIL SHEET (ENGLISH) (REV.7/16/10)

ORIGINAL SCALE IN INCHES FOR REDUCED PLANS 0 1 2 3

UNIT:
PROJECT NUMBER & PHASE: CONTRACT NO.:

DISREGARD PRINTS BEARING EARLIER REVISION DATES →

REVISION DATES - | SHEET | OF

FILE => J:\1858_5th_St_BR\517\REMOVAL\RW1_REMOVAL\1858_RW1_GP.dgn

USERNAME => untitled DATE PLOTTED => 8/15/2016 TIME PLOTTED => 8:58:12 AM

DIST	COUNTY	ROUTE	POST MILES TOTAL PROJECT	SHEET No	TOTAL SHEETS
03	Sut/Yub	Local			

REGISTERED CIVIL ENGINEER DATE

PLANS APPROVAL DATE

REGISTERED PROFESSIONAL ENGINEER
ROSA GRIGGS
No. 54169
Exp. 12-31-17
CIVIL
STATE OF CALIFORNIA

CITY OF YUBA CITY
1201 CIVIC CENTER BOULEVARD
YUBA CITY, CA 95993

Dokken Engineering
110 Blue Ravine Rd, Suite 200
Folsom, CA 95630 (916) 858-0642

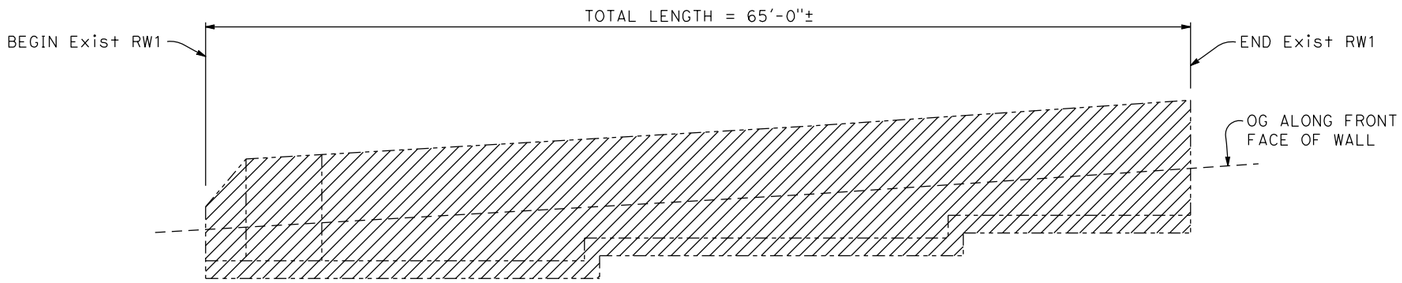

DEVELOPED ELEVATION

1" = 5'

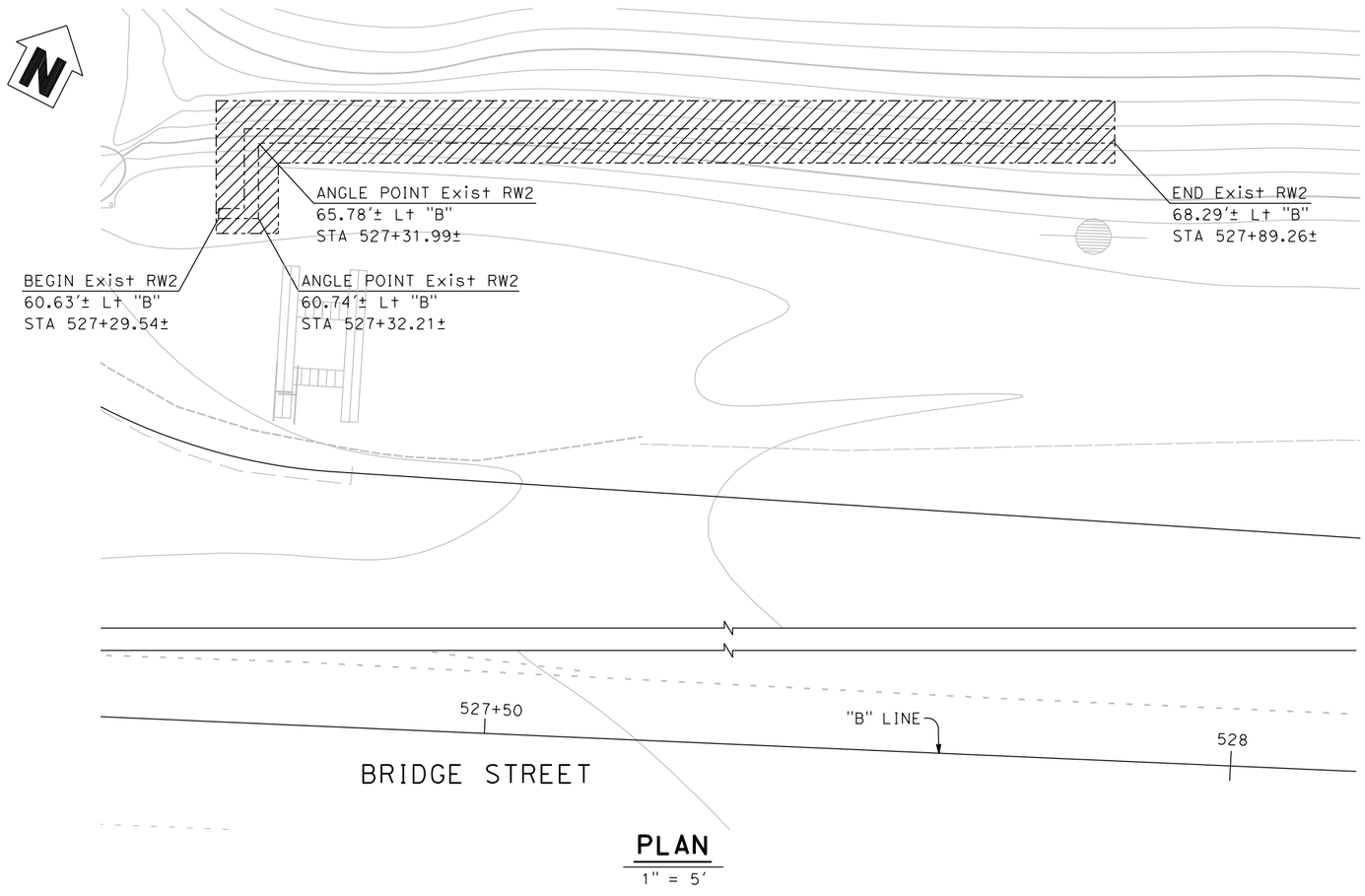

PLAN

1" = 5'

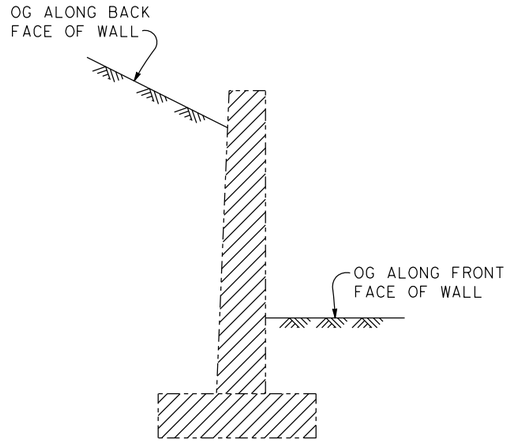

TYPICAL SECTION

1/2" = 1'-0"

LEGEND

DENOTES EXISTING REMOVAL

DESIGN OVERSIGHT		DESIGN	BY R. Griggs	CHECKED T. Osterkamp	PREPARED FOR THE STATE OF CALIFORNIA DEPARTMENT OF TRANSPORTATION	T. Osterkamp PROJECT ENGINEER	BRIDGE NO. - / POST MILES	EXISTING RETAINING WALL NO. 2 RETAINING WALL NO. 2 REMOVAL
SIGN OFF DATE		DETAILS	BY K. Dang	CHECKED				
DESIGN DETAIL SHEET (ENGLISH) (REV.7/16/10)		QUANTITIES	BY	CHECKED	ORIGINAL SCALE IN INCHES FOR REDUCED PLANS 0 1 2 3	UNIT: PROJECT NUMBER & PHASE: CONTRACT NO.:	DISREGARD PRINTS BEARING EARLIER REVISION DATES →	REVISION DATES - / SHEET / OF

FILE => J:\1858_5th_St_BR\517\REMOVAL\RW2_REMOVAL\1858_RW2_GP.dgn

USERNAME => untitled DATE PLOTTED => 8/15/2016 TIME PLOTTED => 8:58:30 AM

DIST	COUNTY	ROUTE	POST MILES TOTAL PROJECT	SHEET No	TOTAL SHEETS
03	Sut/Yub	Local			

REGISTERED CIVIL ENGINEER DATE

PLANS APPROVAL DATE

REGISTERED PROFESSIONAL ENGINEER — ROSA GRIGGS — No. 54169 — Exp. 12-31-17 — CIVIL — STATE OF CALIFORNIA

CITY OF YUBA CITY
1201 CIVIC CENTER BOULEVARD
YUBA CITY, CA 95993

Dokken Engineering
110 Blue Ravine Rd, Suite 200
Folsom, CA 95630 (916) 858-0642

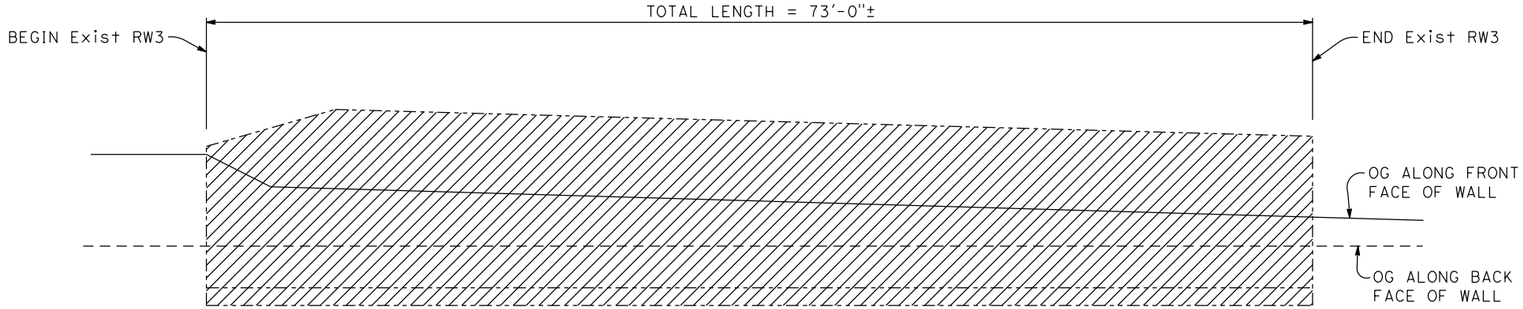

ELEVATION
1" = 5'

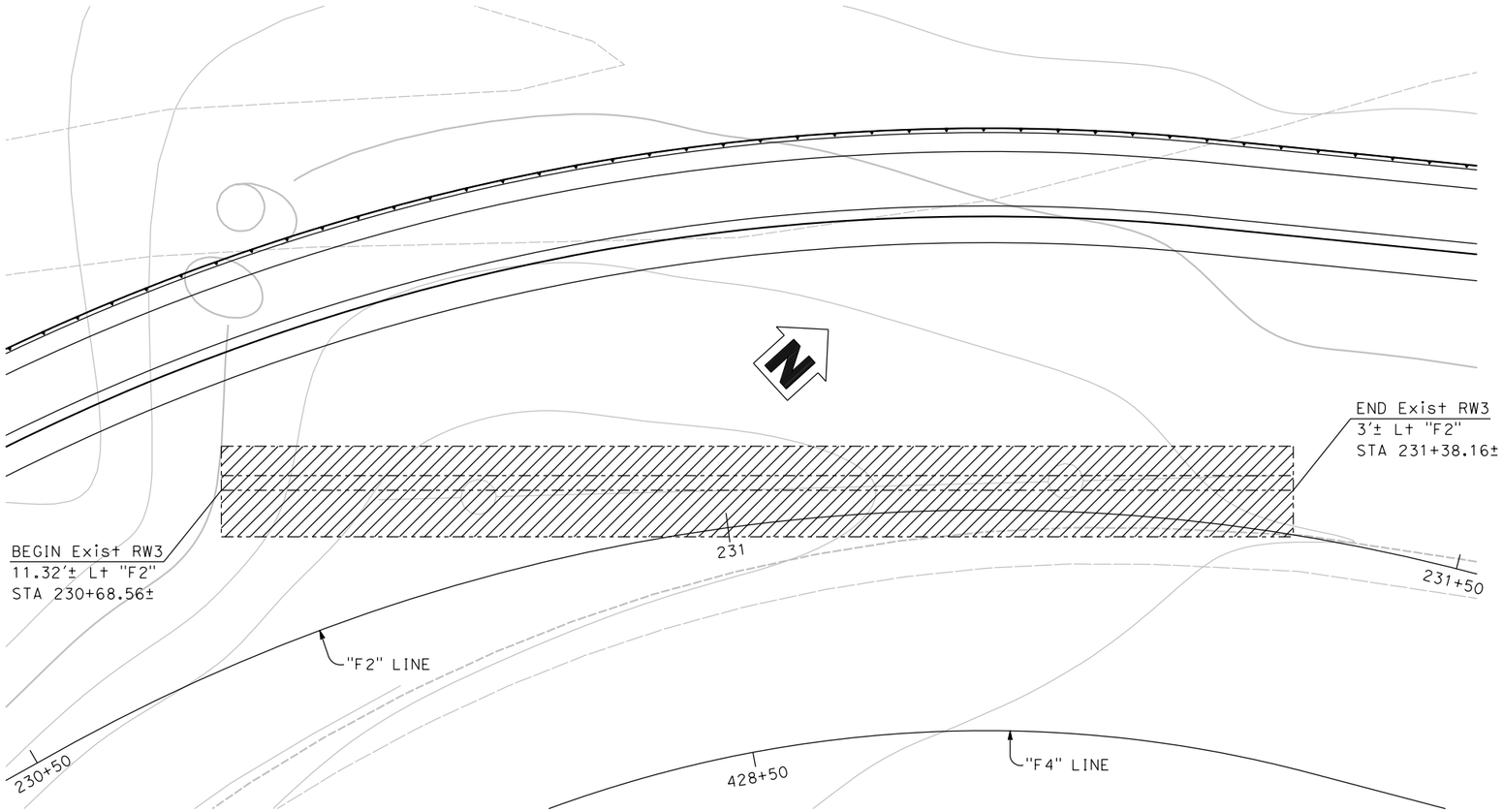

PLAN
1" = 5'

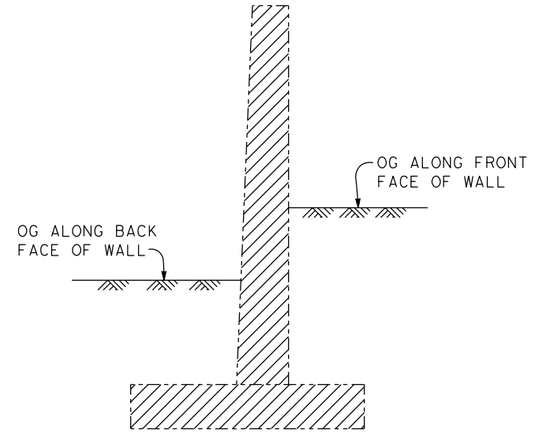

TYPICAL SECTION
½" = 1'-0"

LEGEND

▨ DENOTES EXISTING REMOVAL

DESIGN OVERSIGHT

SIGN OFF DATE

	BY	CHECKED
DESIGN	R. Griggs	T. Osterkamp
DETAILS	K. Dang	
QUANTITIES		

PREPARED FOR THE STATE OF CALIFORNIA DEPARTMENT OF TRANSPORTATION

T. Osterkamp
PROJECT ENGINEER

BRIDGE NO. -
POST MILES

EXISTING RETAINING WALL NO. 3
RETAINING WALL NO. 3 REMOVAL

DESIGN DETAIL SHEET (ENGLISH) (REV.7/16/10)

ORIGINAL SCALE IN INCHES FOR REDUCED PLANS 0 1 2 3

UNIT:
PROJECT NUMBER & PHASE: CONTRACT NO.:

DISREGARD PRINTS BEARING EARLIER REVISION DATES →

REVISION DATES					SHEET	OF
-						

FILE => J:\1858_5th_St_BR\517\REMOVAL\RW3_REMOVAL\1858_RW3_GP.dgn

USERNAME => untitled DATE PLOTTED => 8/15/2016 TIME PLOTTED => 8:58:43 AM

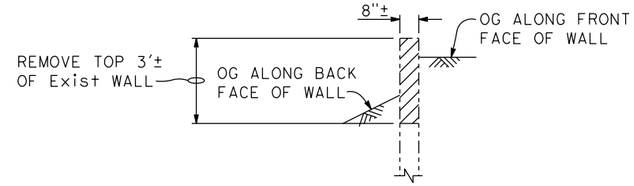

TYPICAL SECTION

3/8" = 1'-0"

DIST	COUNTY	ROUTE	POST MILES TOTAL PROJECT	SHEET No	TOTAL SHEETS
03	Sut/Yub	Local			

REGISTERED CIVIL ENGINEER _____ DATE _____

PLANS APPROVAL DATE _____

REGISTERED PROFESSIONAL ENGINEER — ROSA GRIGGS — No. 54169 — Exp. 12-31-17 — CIVIL — STATE OF CALIFORNIA

CITY OF YUBA CITY
1201 CIVIC CENTER BOULEVARD
YUBA CITY, CA 95993

Dokken Engineering
110 Blue Ravine Rd, Suite 200
Folsom, CA 95630 (916) 858-0642

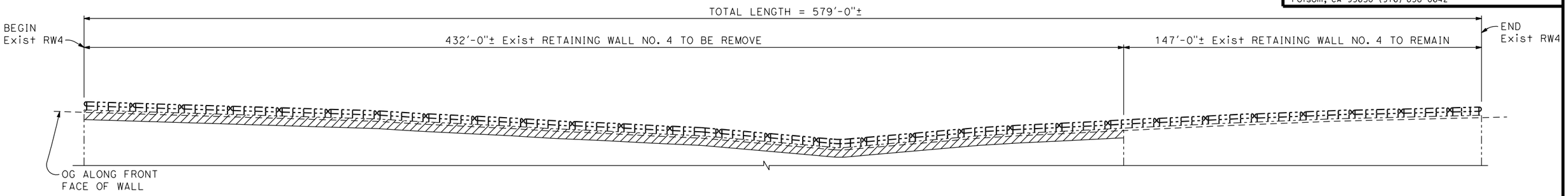

ELEVATION

1" = 20'

PLAN

1" = 20'

LEGEND

▨ DENOTES EXISTING REMOVAL

DESIGN OVERSIGHT _____

SIGN OFF DATE _____

DESIGN DETAIL SHEET (ENGLISH) (REV.7/16/10)

	BY	CHECKED
DESIGN	R. Griggs	T. Osterkamp
DETAILS	K. Dang	CHECKED
QUANTITIES	BY	CHECKED

PREPARED FOR THE STATE OF CALIFORNIA DEPARTMENT OF TRANSPORTATION

T. Osterkamp
PROJECT ENGINEER

BRIDGE NO. -
POST MILES

EXISTING RETAINING WALL NO. 4
RETAINING WALL NO. 4 REMOVAL

ORIGINAL SCALE IN INCHES FOR REDUCED PLANS 0 1 2 3

UNIT:
PROJECT NUMBER & PHASE: CONTRACT NO.:

DISREGARD PRINTS BEARING EARLIER REVISION DATES →

REVISION DATES					SHEET	OF
-						

FILE => J:\1858_5th_St_BR\517\REMOVAL\RW4_REMOVAL\1858_RW4_GP.dgn

USERNAME => untitled DATE PLOTTED => 8/15/2016 TIME PLOTTED => 8:58:53 AM

DIST	COUNTY	ROUTE	POST MILES TOTAL PROJECT	SHEET No	TOTAL SHEETS
03	Sut/Yub	Local			

REGISTERED CIVIL ENGINEER DATE

PLANS APPROVAL DATE

REGISTERED PROFESSIONAL ENGINEER — MASON LEE HANCOCK — No. 75048 — Exp. 12-31-17 — CIVIL — STATE OF CALIFORNIA

CITY OF YUBA CITY
1201 CIVIC CENTER BOULEVARD
YUBA CITY, CA 95993

Dokken Engineering
110 Blue Ravine Rd, Suite 200
Folsom, CA 95630 (916) 858-0642

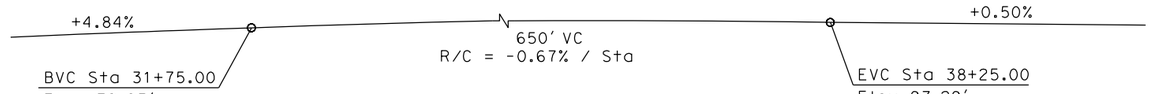

PROFILE GRADE

No Scale

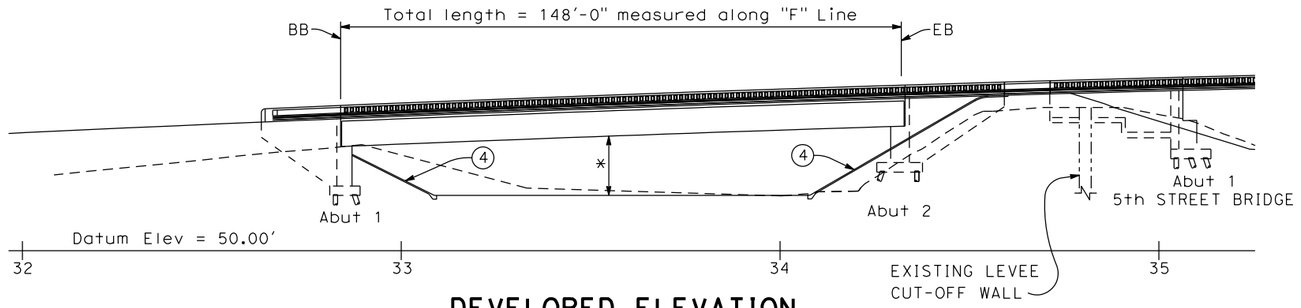

DEVELOPED ELEVATION

1" = 20'

*15'-3" minimum vertical clearance (Permanent & temporary)

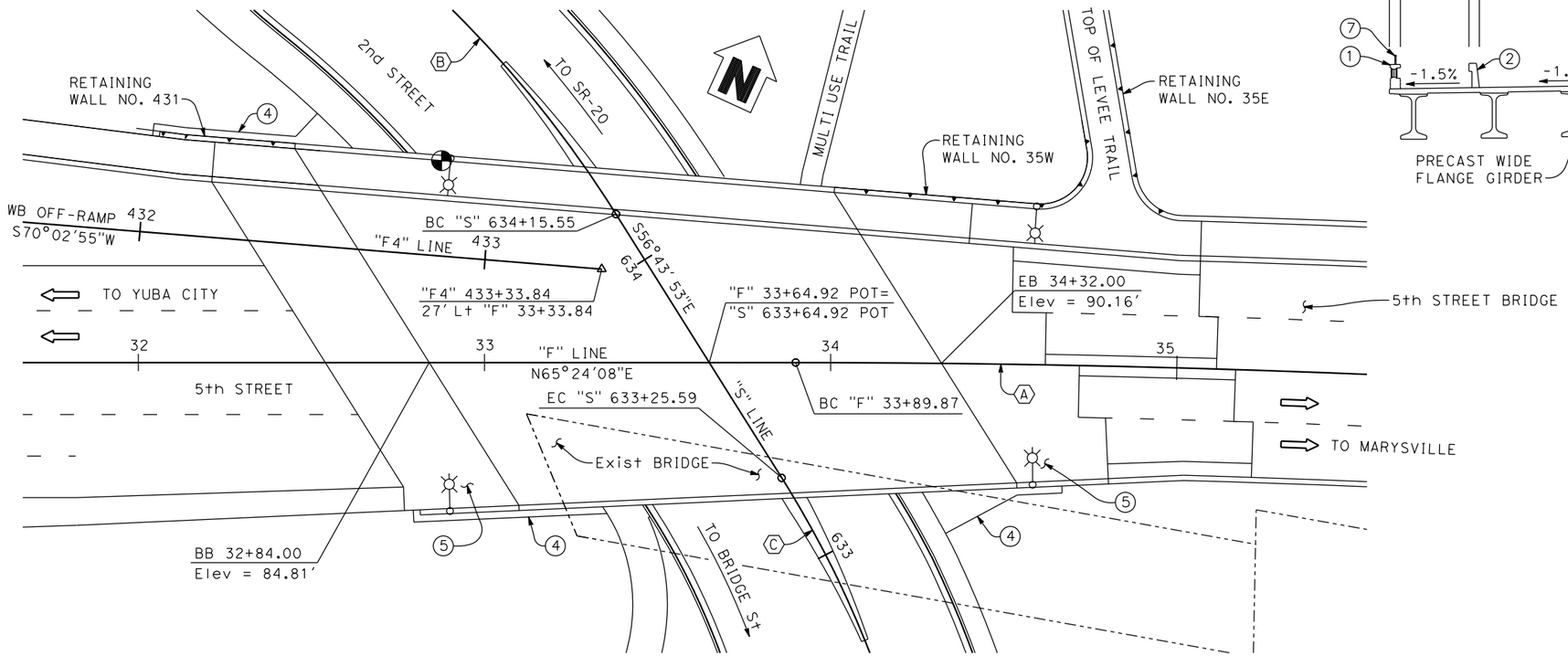

PLAN

1" = 20'

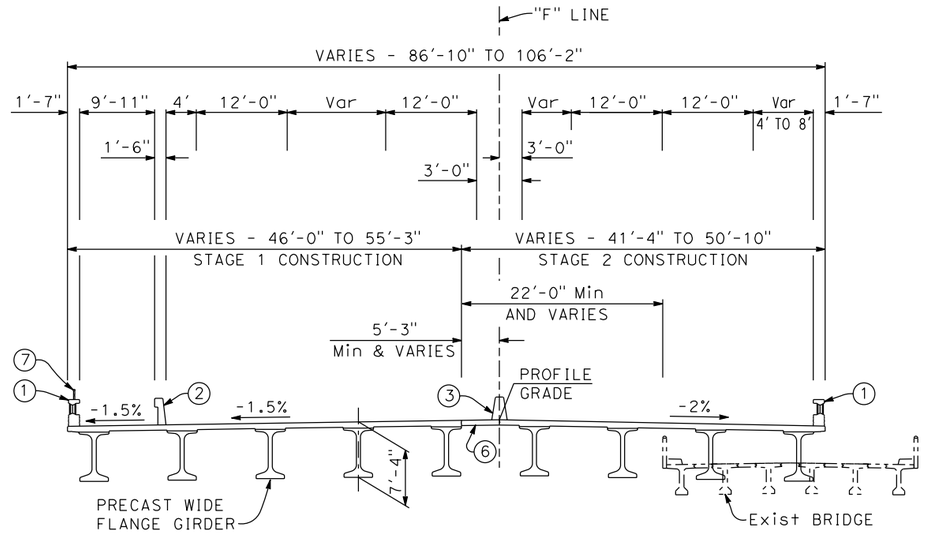

TYPICAL SECTION

1" = 10'

LEGEND

1. Denotes Concrete Barrier Type C412
2. Denotes Concrete Barrier Type 742 (Mod)
3. Denotes Concrete Barrier Type 60A
4. Denotes Slope Paving
5. Denotes Structure Approach Type N(30S)
6. Denotes Closure Pour, varies
7. Tubular Hand Railing

Point of minimum vertical clearance

Denotes street lighting

CURVE DATA

(A)	(B)	(C)
R = 4026.00'	R = 330.00'	R = 300.00'
△ = 27°34'39"	△ = 18°51'32"	△ = 32°22'00"
T = 988.04'	T = 54.81'	T = 87.06'
L = 1937.79'	L = 108.62'	L = 169.47'

DESIGN OVERSIGHT	DESIGN	BY M. Hancock	CHECKED	LOAD & RESISTANCE FACTOR DESIGN	LIVE LOADING: HL93 W/"LOW-BOY"; PERMIT DESIGN VEHICLE		PREPARED FOR THE CITY OF YUBA CITY DEPARTMENT OF PUBLIC WORKS	T. Osterkamp PROJECT ENGINEER	BRIDGE NO. 18C-0055 POST MILES	2ND STREET UNDERCROSSING GENERAL PLAN
	DETAILS	BY K. Dang	CHECKED	LAYOUT	BY M. Hancock	CHECKED T. Osterkamp				
SIGN OFF DATE	QUANTITIES	BY	CHECKED	SPECIFICATIONS	BY	PLANS AND SPECS COMPARED				

DESIGN GENERAL PLAN SHEET (ENGLISH) (REV.7/16/10)

ORIGINAL SCALE IN INCHES FOR REDUCED PLANS 0 1 2 3

UNIT: - PROJECT NUMBER & PHASE: - CONTRACT NO.: X

DISREGARD PRINTS BEARING EARLIER REVISION DATES →

REVISION DATES: x

SHEET 1 OF 26

FILE => J:\1858_5th_St_BR\517\2nd BRIDGE\1858BGP01.dgn

USERNAME => untitled DATE PLOTTED => 8/15/2016 TIME PLOTTED => 10:11:53 AM

DIST	COUNTY	ROUTE	POST MILES TOTAL PROJECT	SHEET No	TOTAL SHEETS
03	Sut/Yub	Local			

REGISTERED CIVIL ENGINEER DATE

PLANS APPROVAL DATE

REGISTERED PROFESSIONAL ENGINEER — MASON LEE HANCOCK — No. 75048 — Exp. 12-31-17 — CIVIL — STATE OF CALIFORNIA

CITY OF YUBA CITY
1201 CIVIC CENTER BOULEVARD
YUBA CITY, CA 95993

Dokken Engineering
110 Blue Ravine Rd, Suite 200
Folsom, CA 95630 (916) 858-0642

INDEX TO PLANS

Sheet No.	Title
1	GENERAL PLAN
2	INDEX TO PLANS
3	DECK CONTOURS
4	FOUNDATION PLAN
5	ABUTMENT 1 LAYOUT
6	ABUTMENT 2 LAYOUT
7	ABUTMENTS PILE LAYOUT
8	ABUTMENT DETAILS No. 1
9	ABUTMENT DETAILS No. 2
10	ABUTMENT DETAILS No. 3
11	ABUTMENT DETAILS No. 4
12	RETAINING WALL NO. 431
13	RETAINING WALL NO. 35W
14	PEDESTRIAN STAIRWAY DETAILS
15	TYPICAL SECTION
16	GIRDER LAYOUT
17	GIRDER DETAILS NO. 1
18	GIRDER DETAILS NO. 2
19	GIRDER DETAILS NO. 3
20	CONCRETE BARRIER TYPE C412 NO. 1
21	CONCRETE BARRIER TYPE C412 NO. 2
22	CONCRETE BARRIER TYPE C412 NO. 3
23	STRUCTURE APPROACH TYPE N(30S)
24	STRUCTURE APPROACH DRAINAGE DETAILS
25	SLOPE PAVING-FULL SLOPE
26	LOG OF TEST BORINGS

STANDARD PLANS DATED 2015

Sheet No.	Title
A3A	ABBREVIATIONS (SHEET 1 OF 3)
A3B	ABBREVIATIONS (SHEET 2 OF 3)
A3C	ABBREVIATIONS (SHEET 3 OF 3)
A10A	LEGEND - LINES AND SYMBOLS (SHEET 1 OF 5)
A10B	LEGEND - LINES AND SYMBOLS (SHEET 2 OF 5)
A10C	LEGEND - LINES AND SYMBOLS (SHEET 3 OF 5)
A10D	LEGEND - LINES AND SYMBOLS (SHEET 4 OF 5)
A10E	LEGEND - LINES AND SYMBOLS (SHEET 5 OF 5)
A10F	LEGEND - SOIL (SHEET 1 OF 2)
A10G	LEGEND - SOIL (SHEET 2 OF 2)
A10H	LEGEND - ROCK
A62C	LIMITS OF PAYMENT FOR EXCAVATION AND BACKFILL BRIDGE
B0-1	BRIDGE DETAILS
B0-3	BRIDGE DETAILS
B0-5	BRIDGE DETAILS
B2-5	PILE DETAILS - CLASS 90 AND CLASS 140
B2-8	PILE DETAILS - CLASS 200
B3-1A	RETAINING WALL TYPE 1 (CASE 1)
B3-5	RETAINING WALL DETAILS No. 1
B6-21	JOINT SEALS (MAXIMUM MOVEMENT RATING = 2")
B7-6	DECK DRAINS TYPES D-1 AND D-2
B11-51	TUBULAR HAND RAILING
B11-57	CONCRETE BARRIER TYPE 742

STANDARD PLAN SHEET No.

DETAIL No.

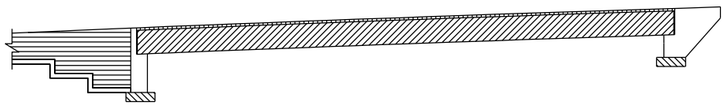

STRUCTURAL CONCRETE, BRIDGE

STRUCTURAL CONCRETE, BRIDGE (f'c = 4.0 ksi @ 28 days)

STRUCTURAL CONCRETE, BRIDGE FOOTING

PRECAST GIRDER, SEE "PRESTRESSING NOTES"

STRUCTURAL CONCRETE, RETAINING WALL

CONCRETE STRENGTH AND TYPE LIMITS

NO SCALE

DESIGN OVERSIGHT

SIGN OFF DATE

	BY	CHECKED
DESIGN	M. Hancock	T. Osterkamp
DETAILS	K. Dang	CHECKED
QUANTITIES		CHECKED

PREPARED FOR THE STATE OF CALIFORNIA DEPARTMENT OF TRANSPORTATION

T. Osterkamp
PROJECT ENGINEER

BRIDGE NO. 18C-0055
POST MILES

2ND STREET UNDERCROSSING
DECK CONTOURS

DESIGN DETAIL SHEET (ENGLISH) (REV.7/16/10)

ORIGINAL SCALE IN INCHES FOR REDUCED PLANS 0 1 2 3

UNIT:
PROJECT NUMBER & PHASE: CONTRACT NO.:

DISREGARD PRINTS BEARING EARLIER REVISION DATES →

REVISION DATES				SHEET	OF
-				2	26

FILE => J:\1858_5th_St_BR\517\2nd BRIDGE\1858BINDX.dgn

USERNAME => unfitted DATE PLOTTED => 8/12/2016 TIME PLOTTED => 10:15:59 AM

DIST	COUNTY	ROUTE	POST MILES TOTAL PROJECT	SHEET No	TOTAL SHEETS
03	Sut/Yub	Local			

REGISTERED CIVIL ENGINEER _____ DATE _____

PLANS APPROVAL DATE _____

REGISTERED PROFESSIONAL ENGINEER
MASON LEE HANCOCK
No. 75048
Exp. 12-31-17
CIVIL
STATE OF CALIFORNIA

CITY OF YUBA CITY
1201 CIVIC CENTER BOULEVARD
YUBA CITY, CA 95993

Dokken Engineering
110 Blue Ravine Rd, Suite 200
Folsom, CA 95630 (916) 858-0642

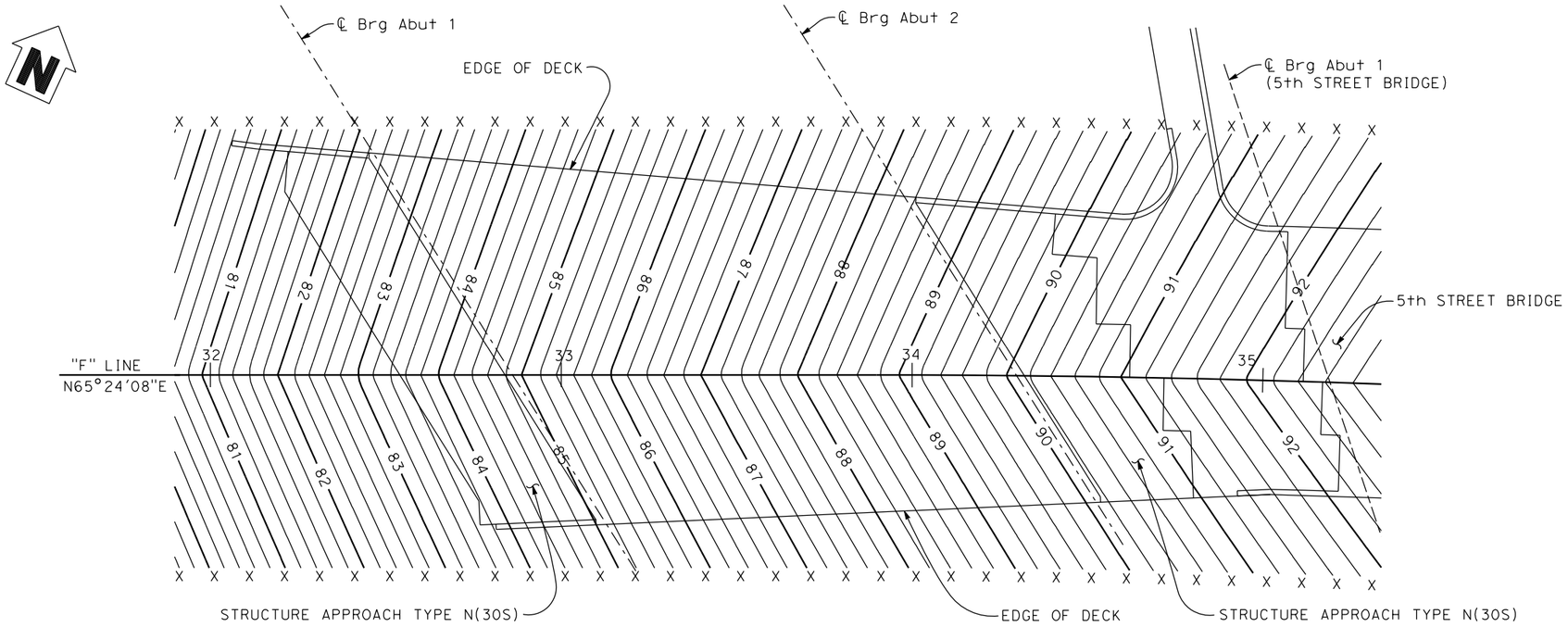

PLAN
1" = 20'

NOTES:

X Denotes 10' interval along station line
Contours do not include camber
Contour interval is 0.20'

DESIGN OVERSIGHT		DESIGN	BY M. Hancock	CHECKED T. Osterkamp	PREPARED FOR THE STATE OF CALIFORNIA DEPARTMENT OF TRANSPORTATION	T. Osterkamp PROJECT ENGINEER	BRIDGE NO. 18C-0055	2ND STREET UNDERCROSSING
SIGN OFF DATE		DETAILS	BY K. Dang	CHECKED			POST MILES	DECK CONTOURS
DESIGN DETAIL SHEET (ENGLISH) (REV.7/16/10)		QUANTITIES	BY	CHECKED	ORIGINAL SCALE IN INCHES FOR REDUCED PLANS 0 1 2 3	UNIT: PROJECT NUMBER & PHASE: CONTRACT NO.:	DISREGARD PRINTS BEARING EARLIER REVISION DATES →	REVISION DATES - SHEET 3 OF 26

FILE => J:\1858_5th_St_BR\5!7\2nd BRIDGE\1858BDC01.dgn

USERNAME => untitled DATE PLOTTED => 8/12/2016 TIME PLOTTED => 10:16:00 AM

DIST	COUNTY	ROUTE	POST MILES TOTAL PROJECT	SHEET No	TOTAL SHEETS
03	Sut/Yub	Local			

REGISTERED CIVIL ENGINEER DATE

PLANS APPROVAL DATE

REGISTERED PROFESSIONAL ENGINEER
MASON LEE HANCOCK
No. 75048
Exp. 12-31-17
CIVIL
STATE OF CALIFORNIA

CITY OF YUBA CITY
1201 CIVIC CENTER BOULEVARD
YUBA CITY, CA 95993

Dokken Engineering
110 Blue Ravine Rd, Suite 200
Folsom, CA 95630 (916) 858-0642

LEGEND:

Denotes bottom of footing elev

Denotes pile. All piles not shown.

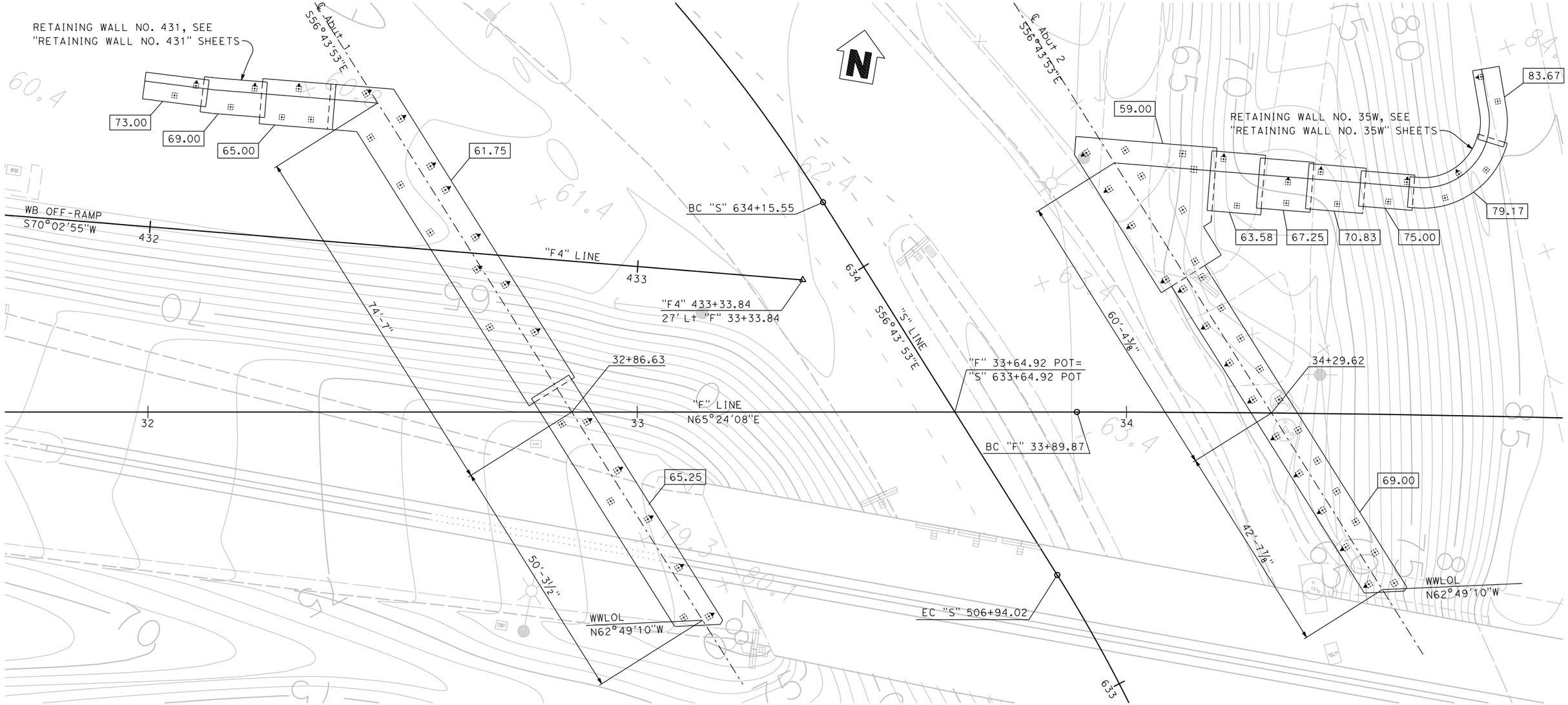

PLAN

1" = 10'

GEOTECHNICAL PROFESSIONAL APPROVAL DATE

DESIGN OVERSIGHT	SCALE:	VERT.DATUM	HORZ.DATUM	DESIGN	BY M. Hancock	CHECKED	PREPARED FOR THE STATE OF CALIFORNIA DEPARTMENT OF TRANSPORTATION
	PHOTOGRAMMETRY AS OF:	ALIGNMENT TIES		DETAILS	BY K. Dang	CHECKED	
SIGN OFF DATE	SURVEYED BY	DRAFTED BY		QUANTITIES	BY	CHECKED	
	FIELD CHECKED BY	CHECKED BY					

T. Osterkamp
PROJECT ENGINEER

BRIDGE NO. 18C-0055
POST MILES

2ND STREET UNDERCROSSING
FOUNDATION PLAN

FOUNDATION PLAN SHEET (ENGLISH) (REV. 03/14/12)

ORIGINAL SCALE IN INCHES FOR REDUCED PLANS 0 1 2 3

UNIT:
PROJECT NUMBER & PHASE: CONTRACT NO.:

DISREGARD PRINTS BEARING EARLIER REVISION DATES →

REVISION DATES				SHEET	OF
x				4	26

FILE => J:\1858_5th_St_BR\517\2nd BRIDGE\1858BFP01.dgn

USERNAME => untitled DATE PLOTTED => 8/12/2016 TIME PLOTTED => 10:17:56 AM

DIST	COUNTY	ROUTE	POST MILES TOTAL PROJECT	SHEET No	TOTAL SHEETS
03	Sut/Yub	Local			

REGISTERED CIVIL ENGINEER DATE

REGISTERED PROFESSIONAL ENGINEER — MASON LEE HANCOCK — No. 75048 — Exp. 12-31-17 — CIVIL — STATE OF CALIFORNIA

PLANS APPROVAL DATE

CITY OF YUBA CITY
1201 CIVIC CENTER BOULEVARD
YUBA CITY, CA 95993

Dokken Engineering
110 Blue Ravine Rd, Suite 200
Folsom, CA 95630 (916) 858-0642

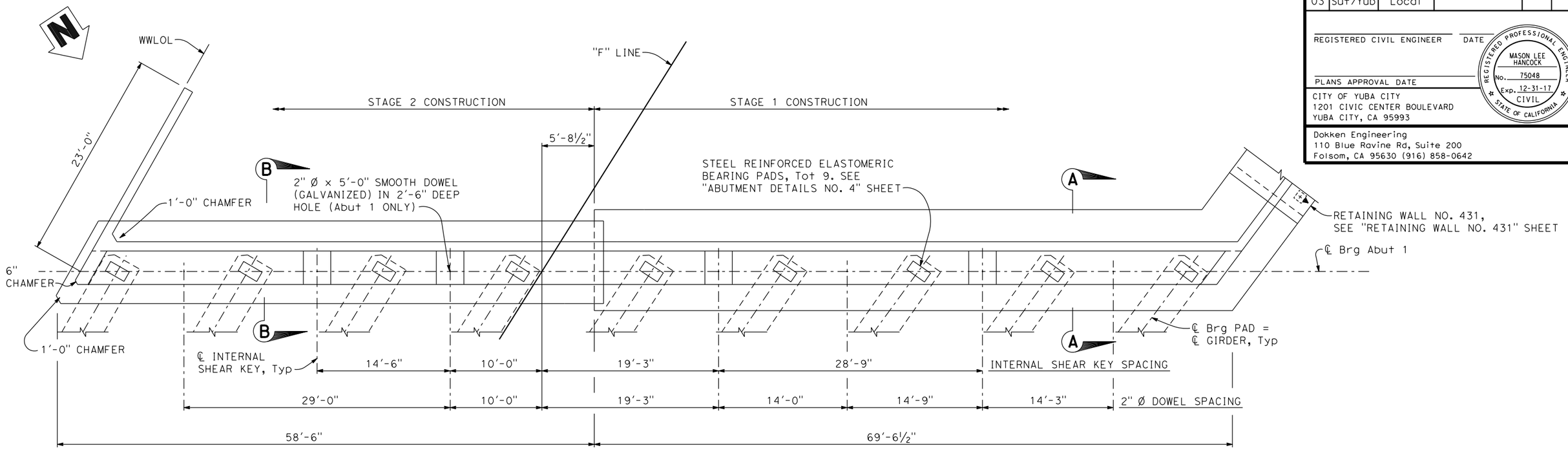

PLAN

3/16" = 1'-0"

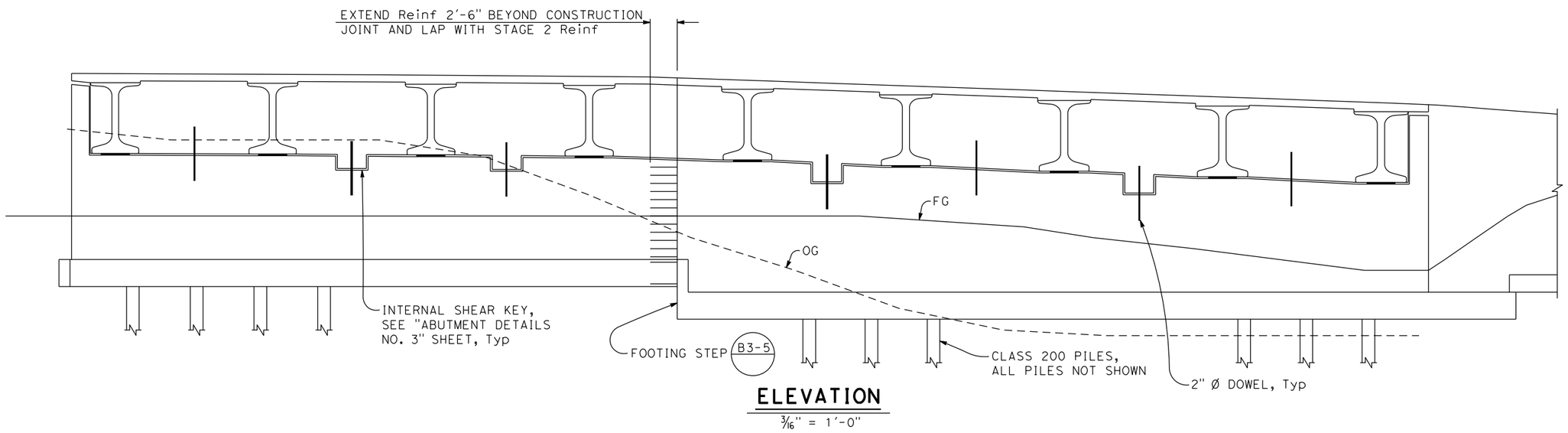

ELEVATION

3/16" = 1'-0"

NOTE:

For "SECTIONS A-A & B-B" see "ABUTMENT DETAILS NO. 1" sheet.

DESIGN OVERSIGHT		DESIGN BY M. Hancock	CHECKED T. Osterkamp	PREPARED FOR THE STATE OF CALIFORNIA DEPARTMENT OF TRANSPORTATION	T. Osterkamp PROJECT ENGINEER	BRIDGE NO. 18C-0055
SIGN OFF DATE		DETAILS BY K. Dang	CHECKED			POST MILES
		QUANTITIES BY	CHECKED			

2ND STREET UNDERCROSSING
ABUTMENT 1 LAYOUT

DESIGN DETAIL SHEET (ENGLISH) (REV.7/16/10)

ORIGINAL SCALE IN INCHES FOR REDUCED PLANS 0 1 2 3

UNIT:
PROJECT NUMBER & PHASE: CONTRACT NO.:

DISREGARD PRINTS BEARING EARLIER REVISION DATES →

REVISION DATES					SHEET	OF
-					5	26

FILE => J:\1858_5th_St_BR\517\2nd BRIDGE\1858BAL01.dgn

USERNAME => untitled DATE PLOTTED => 8/12/2016 TIME PLOTTED => 10:16:01 AM

DIST	COUNTY	ROUTE	POST MILES TOTAL PROJECT	SHEET No	TOTAL SHEETS
03	Sut/Yub	Local			

REGISTERED CIVIL ENGINEER _____ DATE _____

PLANS APPROVAL DATE _____

REGISTERED PROFESSIONAL ENGINEER — MASON LEE HANCOCK — No. 75048 — Exp. 12-31-17 — CIVIL — STATE OF CALIFORNIA

CITY OF YUBA CITY
1201 CIVIC CENTER BOULEVARD
YUBA CITY, CA 95993

Dokken Engineering
110 Blue Ravine Rd, Suite 200
Folsom, CA 95630 (916) 858-0642

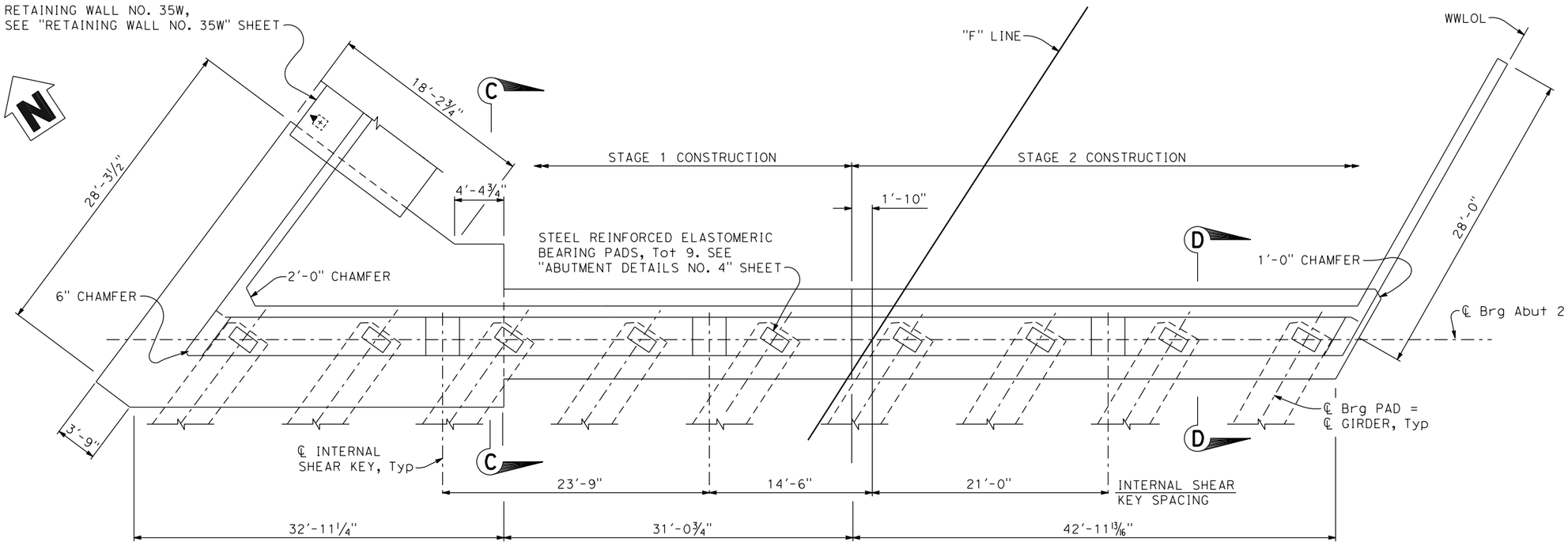

PLAN
3/16" = 1'-0"

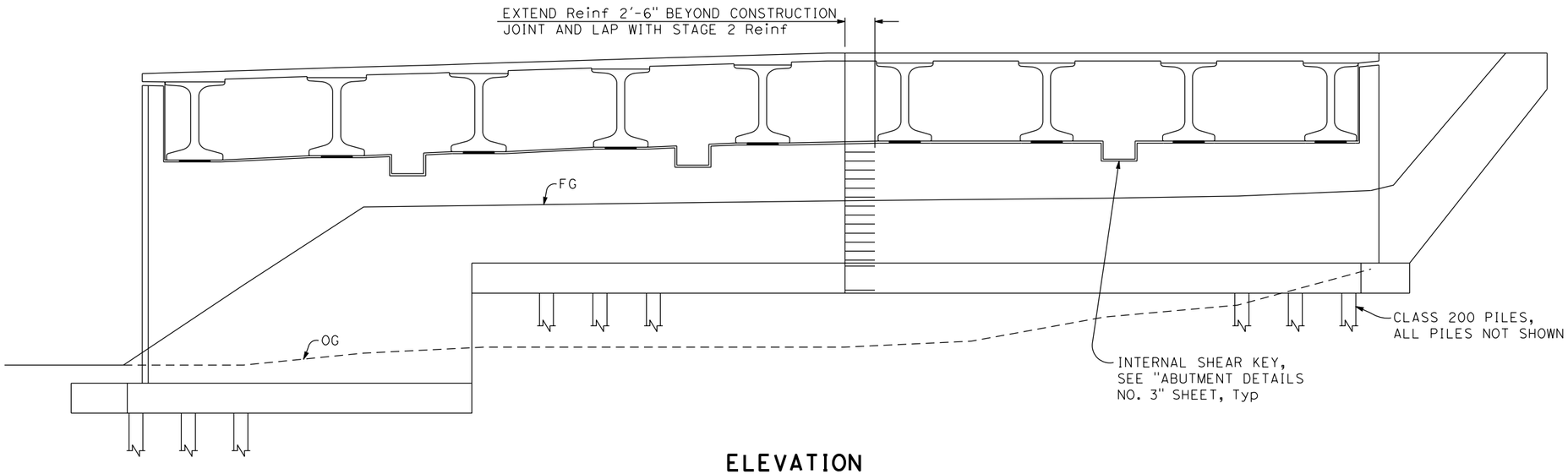

ELEVATION
3/16" = 1'-0"

NOTE:

For "SECTIONS C-C & D-D" see "ABUTMENT DETAILS NO. 2" sheet.

DESIGN OVERSIGHT		DESIGN	BY M. Hancock	CHECKED T. Osterkamp	PREPARED FOR THE STATE OF CALIFORNIA DEPARTMENT OF TRANSPORTATION	T. Osterkamp PROJECT ENGINEER	BRIDGE NO. 18C-0055
SIGN OFF DATE		DETAILS	BY K. Dang	CHECKED			POST MILES
		QUANTITIES	BY	CHECKED			

2ND STREET UNDERCROSSING
ABUTMENT 2 LAYOUT

DESIGN DETAIL SHEET (ENGLISH) (REV.7/16/10)

ORIGINAL SCALE IN INCHES FOR REDUCED PLANS 0 1 2 3

UNIT:
PROJECT NUMBER & PHASE: CONTRACT NO.:

DISREGARD PRINTS BEARING EARLIER REVISION DATES →

REVISION DATES				SHEET	OF
-				6	26

FILE => J:\1858_5th_St_BR\517\2nd BRIDGE\1858BAL02.dgn

USERNAME => untitled DATE PLOTTED => 8/12/2016 TIME PLOTTED => 10:16:02 AM

DIST	COUNTY	ROUTE	POST MILES TOTAL PROJECT	SHEET No	TOTAL SHEETS
03	Sut/Yub	Local			

REGISTERED CIVIL ENGINEER — DATE

PLANS APPROVAL DATE

REGISTERED PROFESSIONAL ENGINEER — MASON LEE HANCOCK — No. 75048 — Exp. 12-31-17 — CIVIL — STATE OF CALIFORNIA

CITY OF YUBA CITY
1201 CIVIC CENTER BOULEVARD
YUBA CITY, CA 95993

Dokken Engineering
110 Blue Ravine Rd, Suite 200
Folsom, CA 95630 (916) 858-0642

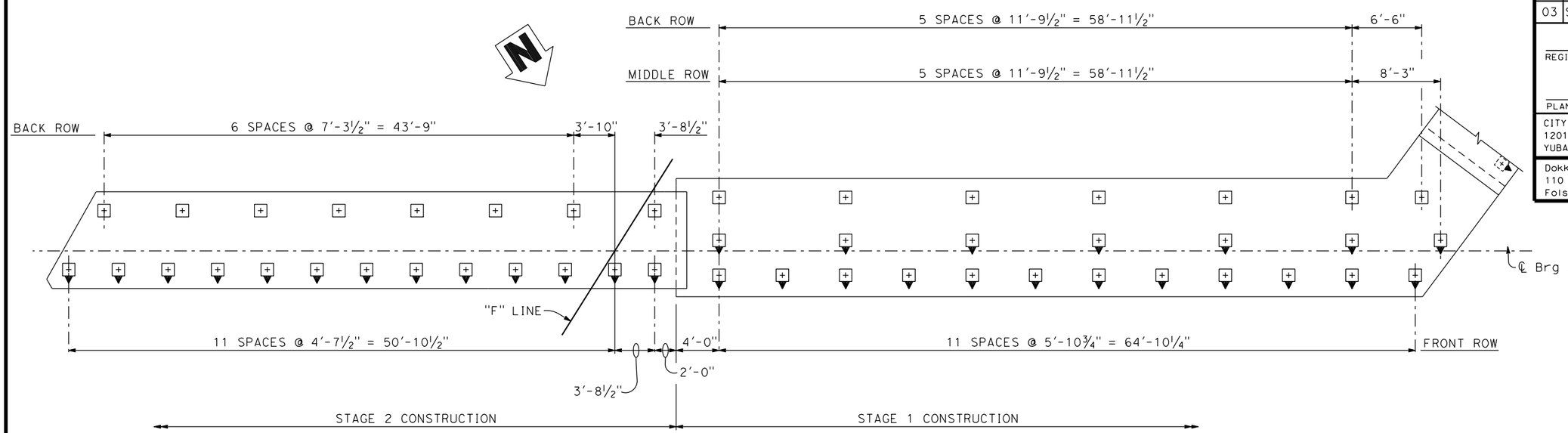

ABUTMENT 1 PILE LAYOUT

3/16" = 1'-0"

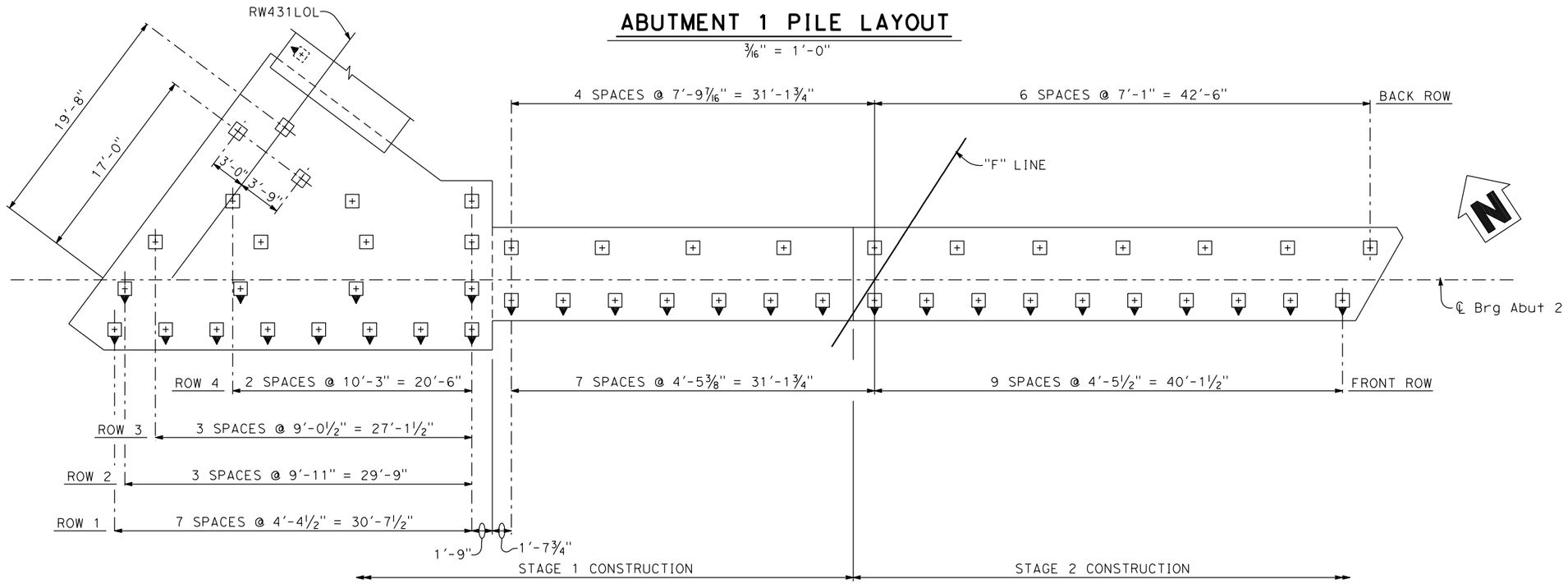

ABUTMENT 2 PILE LAYOUT

3/16" = 1'-0"

DESIGN OVERSIGHT

SIGN OFF DATE

	BY	CHECKED
DESIGN	M. Hancock	T. Osterkamp
DETAILS	K. Dang	
QUANTITIES		

PREPARED FOR THE STATE OF CALIFORNIA DEPARTMENT OF TRANSPORTATION

T. Osterkamp
PROJECT ENGINEER

BRIDGE NO. 18C-0055
POST MILES

2ND STREET UNDERCROSSING
ABUTMENTS PILE LAYOUT

DESIGN DETAIL SHEET (ENGLISH) (REV.7/16/10)

ORIGINAL SCALE IN INCHES FOR REDUCED PLANS 0 1 2 3

UNIT:
PROJECT NUMBER & PHASE:
CONTRACT NO.:

DISREGARD PRINTS BEARING EARLIER REVISION DATES →

REVISION DATES					SHEET	OF
-					7	26

FILE => J:\1858_5th_St_BR\517\2nd BRIDGE\1858BAD01.dgn

USERNAME => untitled DATE PLOTTED => 8/12/2016 TIME PLOTTED => 10:16:02 AM

DIST	COUNTY	ROUTE	POST MILES TOTAL PROJECT	SHEET No	TOTAL SHEETS
03	Sut/Yub	Local			

REGISTERED CIVIL ENGINEER DATE

PLANS APPROVAL DATE

REGISTERED PROFESSIONAL ENGINEER — MASON LEE HANCOCK — No. 75048 — Exp. 12-31-17 — CIVIL — STATE OF CALIFORNIA

CITY OF YUBA CITY
1201 CIVIC CENTER BOULEVARD
YUBA CITY, CA 95993

Dokken Engineering
110 Blue Ravine Rd, Suite 200
Folsom, CA 95630 (916) 858-0642

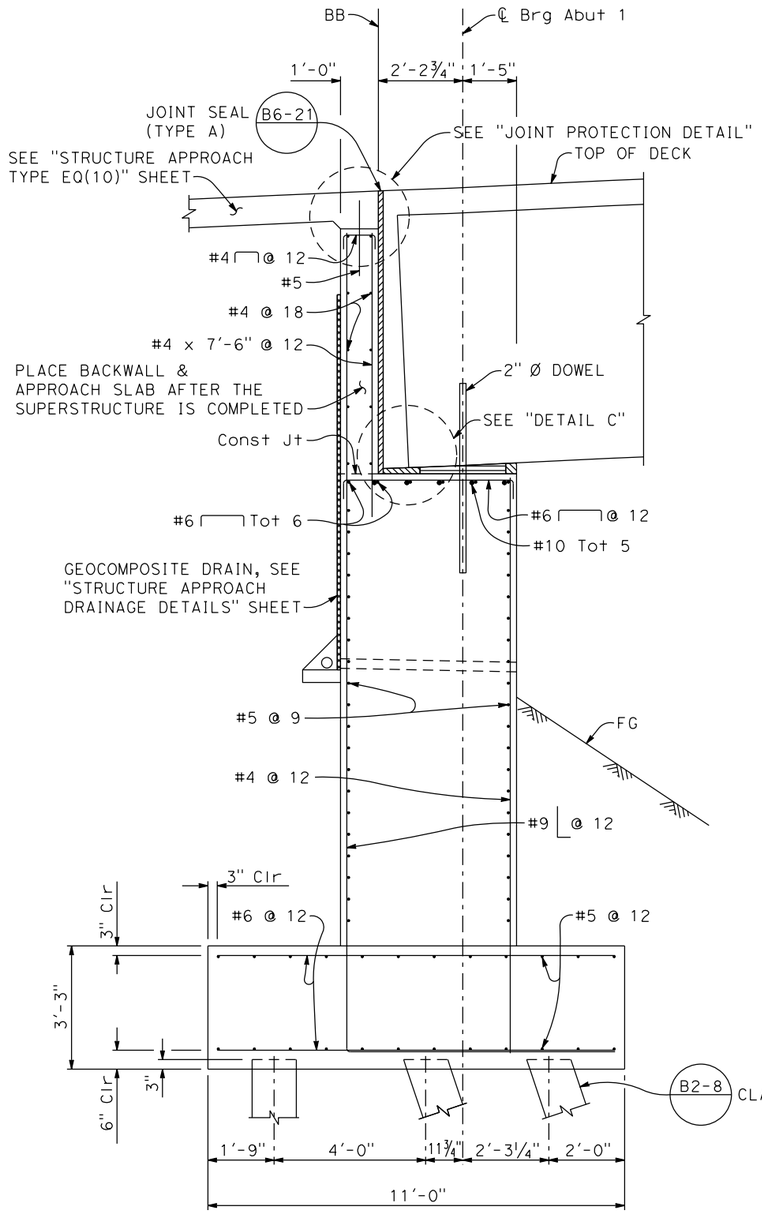

SECTION A-A

½" = 1'-0"

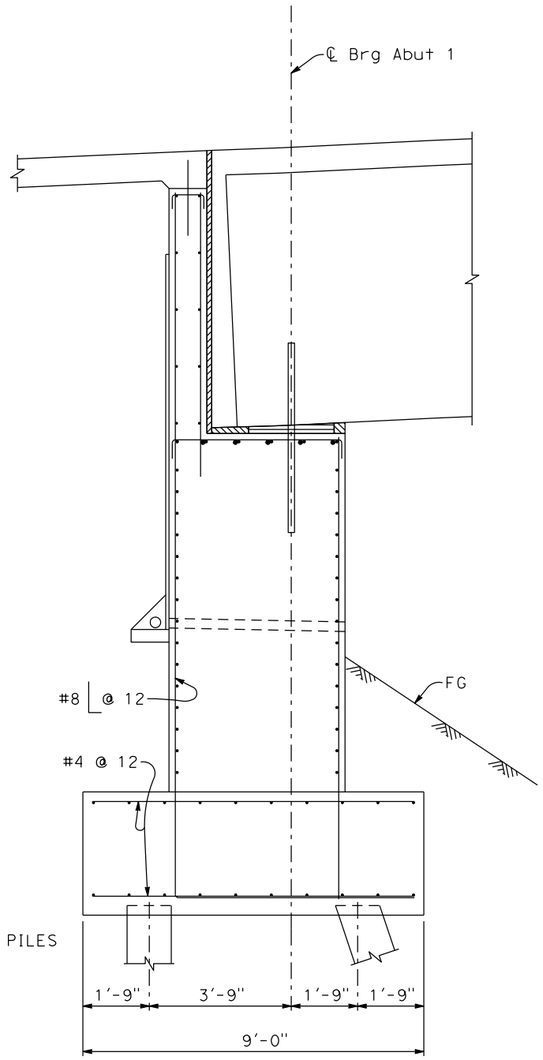

SECTION B-B

½" = 1'-0"

FOR DETAILS NOT SHOWN, SEE "SECTION A-A".

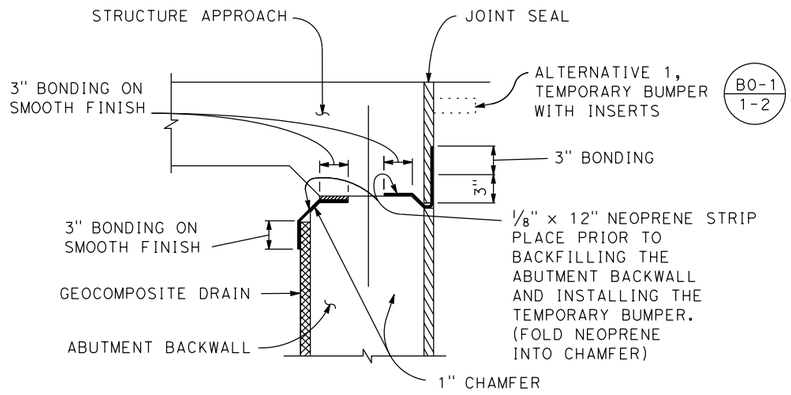

JOINT PROTECTION DETAIL

NO SCALE

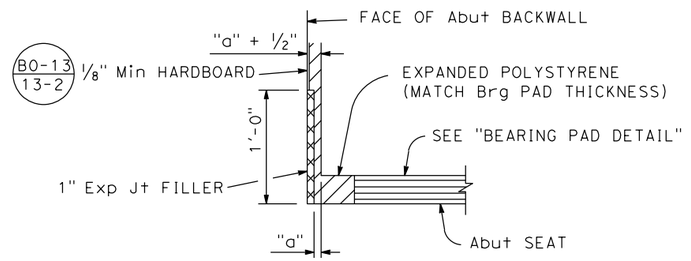

DETAIL C

NO SCALE

NOTE:

For locations of "SECTION A-A & B-B" see "ABUTMNET 1 LAYOUT" SHEET.

DESIGN OVERSIGHT		DESIGN	BY M. Hancock	CHECKED T. Osterkamp	PREPARED FOR THE STATE OF CALIFORNIA DEPARTMENT OF TRANSPORTATION	T. Osterkamp PROJECT ENGINEER
SIGN OFF DATE		DETAILS	BY K. Dang	CHECKED		BRIDGE NO. 18C-0055
		QUANTITIES	BY	CHECKED		POST MILES

2ND STREET UNDERCROSSING
ABUTMENT DETAILS NO. 1

DESIGN DETAIL SHEET (ENGLISH) (REV.7/16/10)

ORIGINAL SCALE IN INCHES FOR REDUCED PLANS 0 1 2 3

UNIT: PROJECT NUMBER & PHASE: CONTRACT NO.:

DISREGARD PRINTS BEARING EARLIER REVISION DATES →

REVISION DATES

SHEET 8 OF 26

FILE => J:\1858_5th_St_BR\517\2nd BRIDGE\1858BAD02.dgn

USERNAME => untitled DATE PLOTTED => 8/12/2016 TIME PLOTTED => 10:16:03 AM

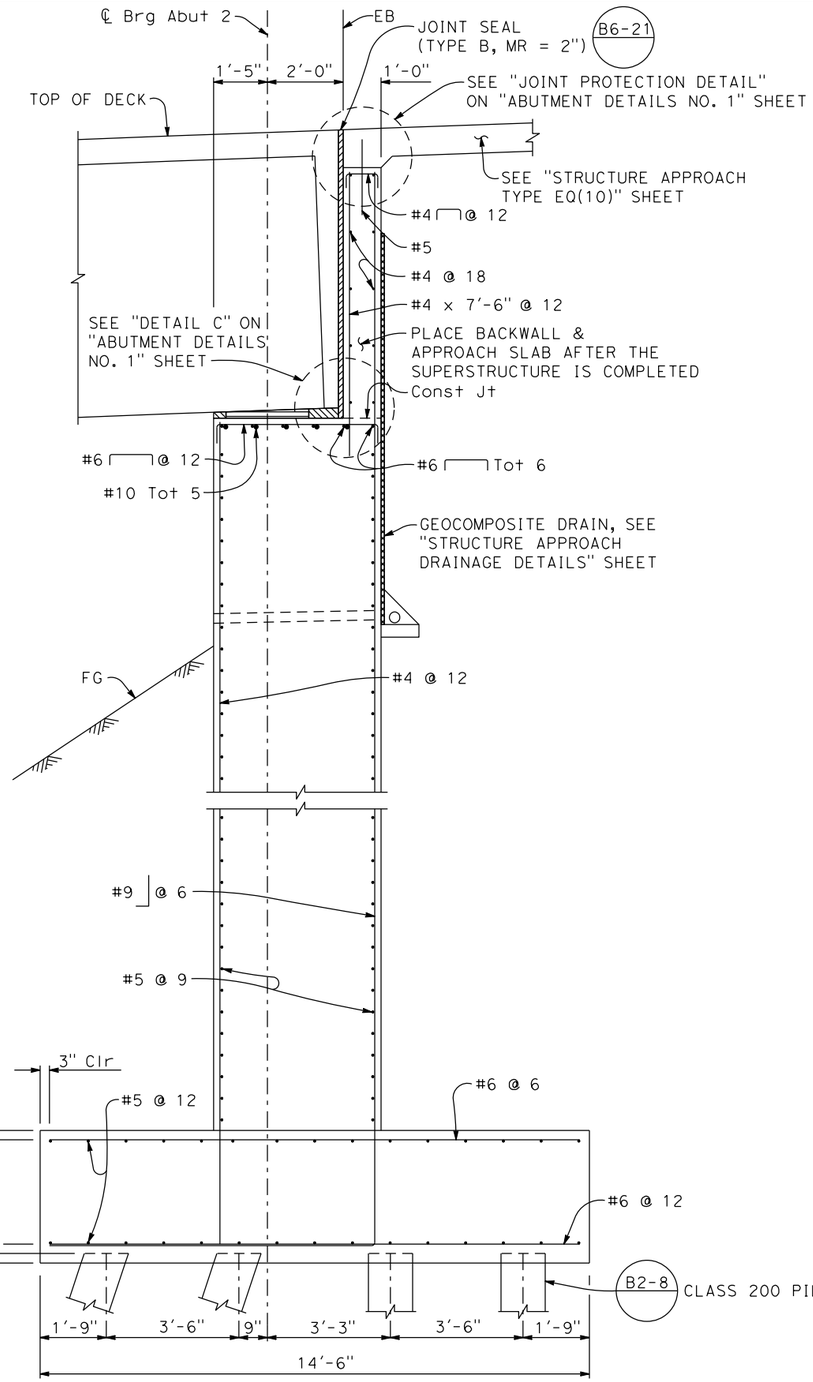

SECTION A-A

1/2" = 1'-0"

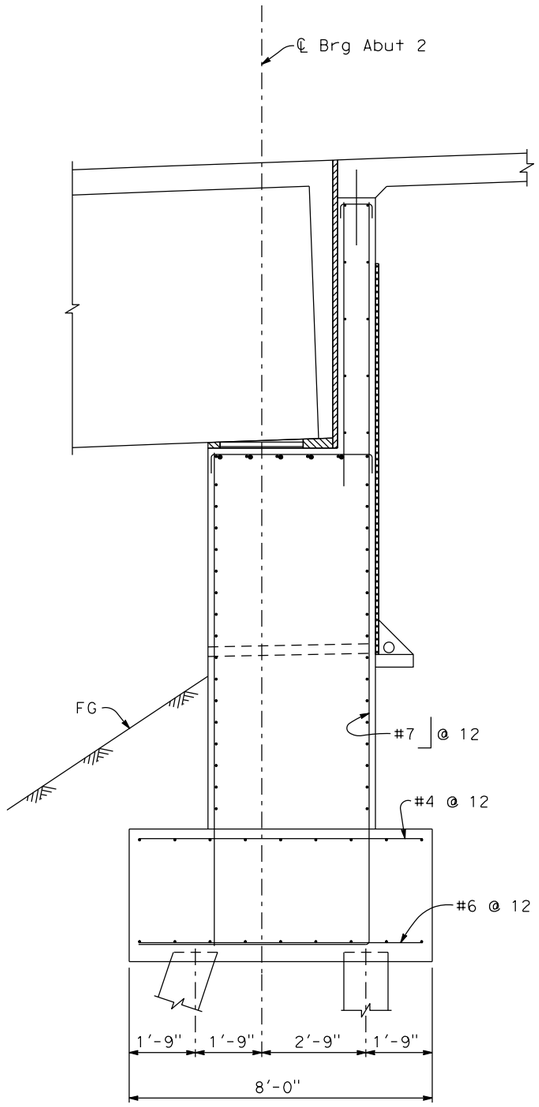

SECTION D-D

1/2" = 1'-0"

FOR DETAILS NOT SHOWN, SEE "SECTION C-C".

NOTE:

For location of "SECTIONS C-C & D-D" see "ABUTMNET 2 LAYOUT" SHEET.

DIST	COUNTY	ROUTE	POST MILES TOTAL PROJECT	SHEET No	TOTAL SHEETS
03	Sut/Yub	Local			

REGISTERED CIVIL ENGINEER DATE

PLANS APPROVAL DATE

REGISTERED PROFESSIONAL ENGINEER — MASON LEE HANCOCK — No. 75048 — Exp. 12-31-17 — CIVIL — STATE OF CALIFORNIA

CITY OF YUBA CITY
1201 CIVIC CENTER BOULEVARD
YUBA CITY, CA 95993

Dokken Engineering
110 Blue Ravine Rd, Suite 200
Folsom, CA 95630 (916) 858-0642

DESIGN OVERSIGHT

SIGN OFF DATE

	BY	CHECKED
DESIGN	M. Hancock	T. Osterkamp
DETAILS	K. Dang	
QUANTITIES		

PREPARED FOR THE
STATE OF CALIFORNIA
DEPARTMENT OF TRANSPORTATION

T. Osterkamp
PROJECT ENGINEER

BRIDGE NO. 18C-0055
POST MILES

2ND STREET UNDERCROSSING
ABUTMENT DETAILS NO. 2

DESIGN DETAIL SHEET (ENGLISH) (REV.7/16/10)

ORIGINAL SCALE IN INCHES FOR REDUCED PLANS 0 1 2 3

UNIT:
PROJECT NUMBER & PHASE: CONTRACT NO.:

DISREGARD PRINTS BEARING EARLIER REVISION DATES

REVISION DATES					SHEET	OF
-					9	26

FILE => J:\1858_5th_St_BR\517\2nd BRIDGE\1858BAD03.dgn

USERNAME => untitled DATE PLOTTED => 8/12/2016 TIME PLOTTED => 10:16:03 AM

DIST	COUNTY	ROUTE	POST MILES TOTAL PROJECT	SHEET No	TOTAL SHEETS
03	Sut/Yub	Local			

REGISTERED CIVIL ENGINEER DATE

PLANS APPROVAL DATE

REGISTERED PROFESSIONAL ENGINEER — MASON LEE HANCOCK — No. 75048 — Exp. 12-31-17 — CIVIL — STATE OF CALIFORNIA

CITY OF YUBA CITY
1201 CIVIC CENTER BOULEVARD
YUBA CITY, CA 95993

Dokken Engineering
110 Blue Ravine Rd, Suite 200
Folsom, CA 95630 (916) 858-0642

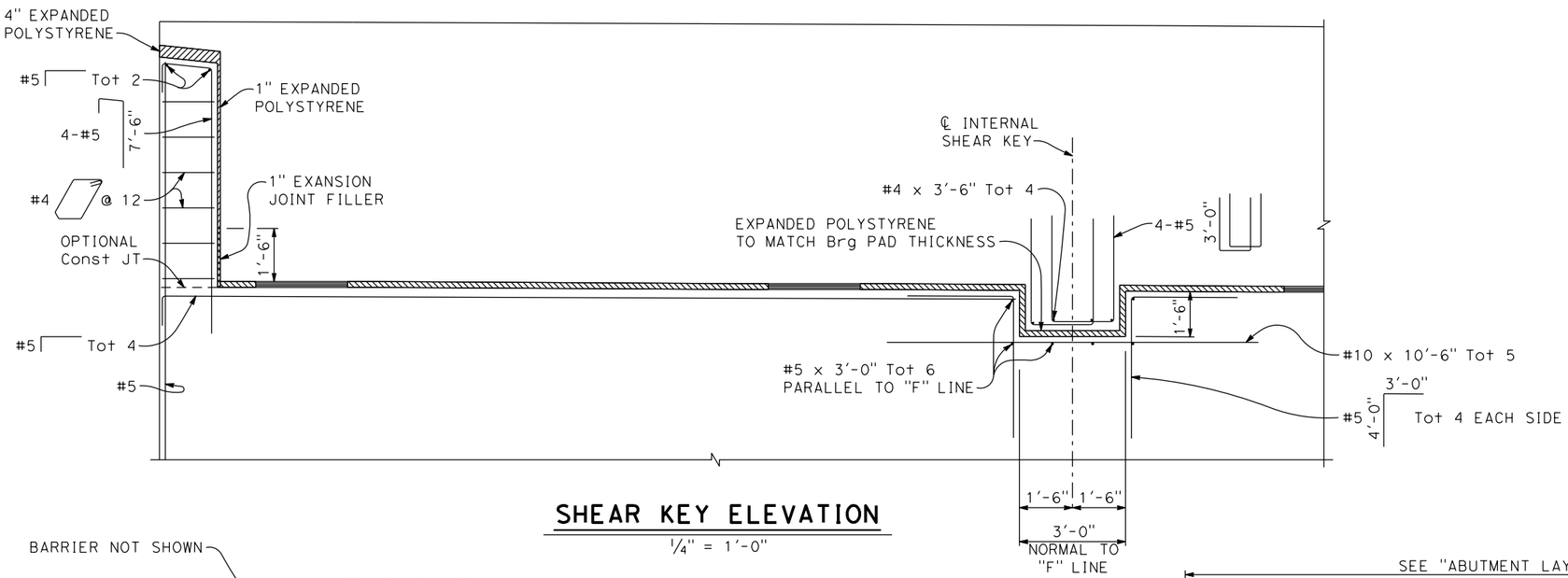

SHEAR KEY ELEVATION

1/4" = 1'-0"

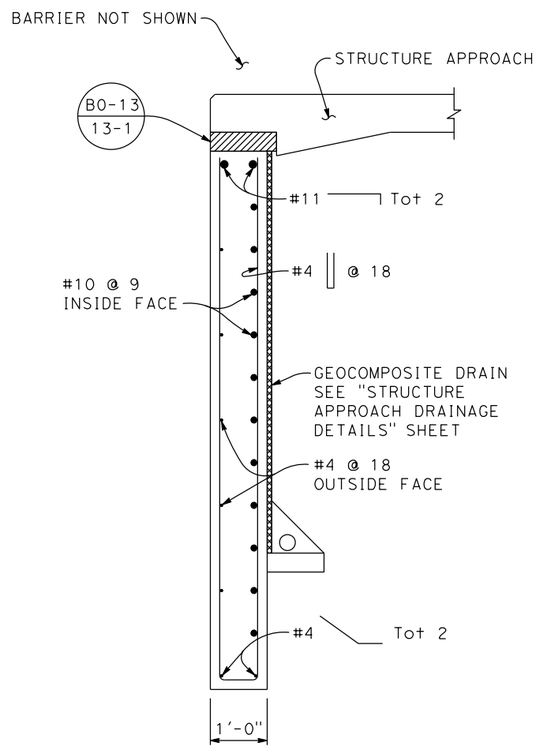

SECTION K-K

3/4" = 1'-0"

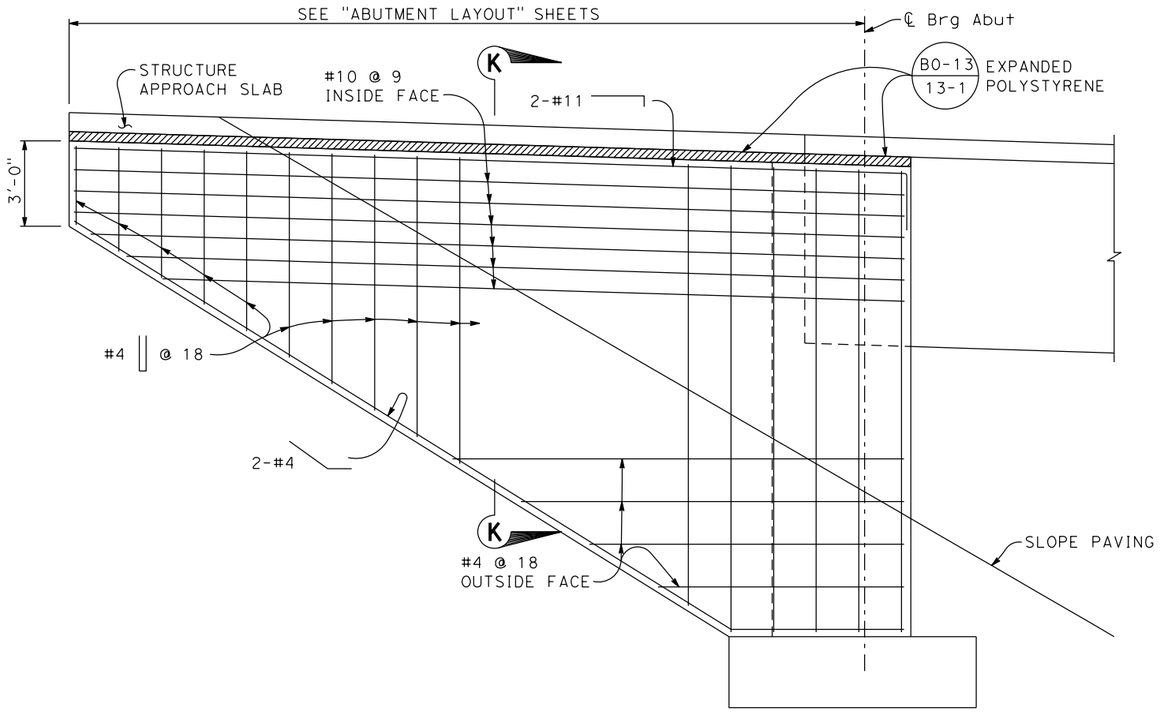

TYPICAL WINGWALL ELEVATION

3/8" = 1'-0"

DESIGN OVERSIGHT		DESIGN	BY M. Hancock	CHECKED T. Osterkamp	PREPARED FOR THE STATE OF CALIFORNIA DEPARTMENT OF TRANSPORTATION	T. Osterkamp PROJECT ENGINEER	BRIDGE NO. 18C-0055 POST MILES	2ND STREET UNDERCROSSING ABUTMENT DETAILS NO. 3
SIGN OFF DATE		DETAILS	BY K. Dang	CHECKED				
		QUANTITIES	BY	CHECKED				

DESIGN DETAIL SHEET (ENGLISH) (REV.7/16/10)

ORIGINAL SCALE IN INCHES FOR REDUCED PLANS 0 1 2 3

UNIT: PROJECT NUMBER & PHASE: CONTRACT NO.:

DISREGARD PRINTS BEARING EARLIER REVISION DATES →

REVISION DATES: - | | | |

SHEET 10 OF 26

FILE => J:\1858_5th_St_BR\517\2nd BRIDGE\1858BAD04.dgn

USERNAME => untitled DATE PLOTTED => 8/12/2016 TIME PLOTTED => 10:16:04 AM

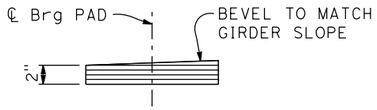

SECTION G-G

1½" = 1'-0"

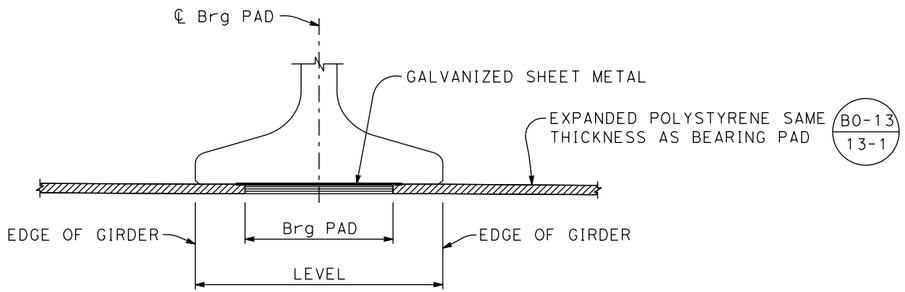

ELEVATION

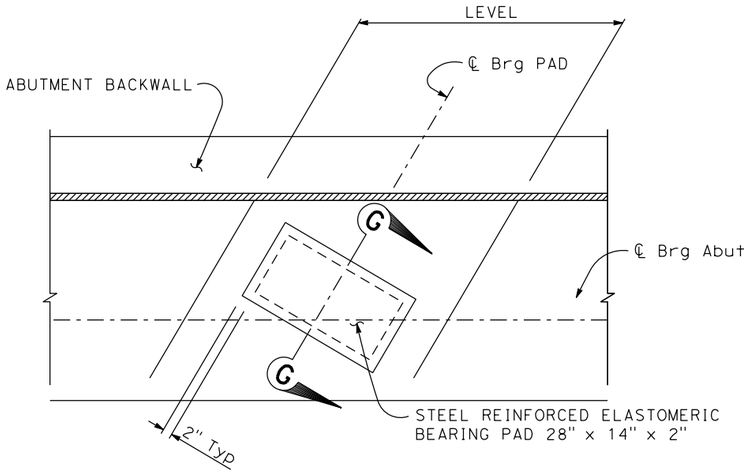

PLAN

BEARING PAD DETAILS

¾" = 1'-0"

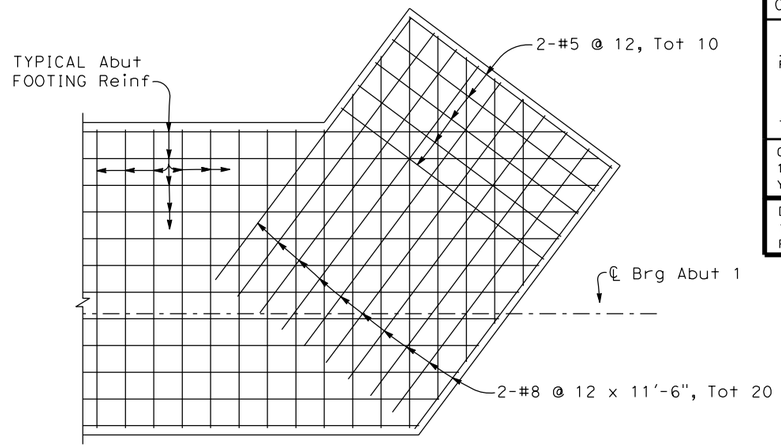

ABUTMENT 1 - PART FOOTING REINFORCEMENT PLAN

⅜" = 1'-0"

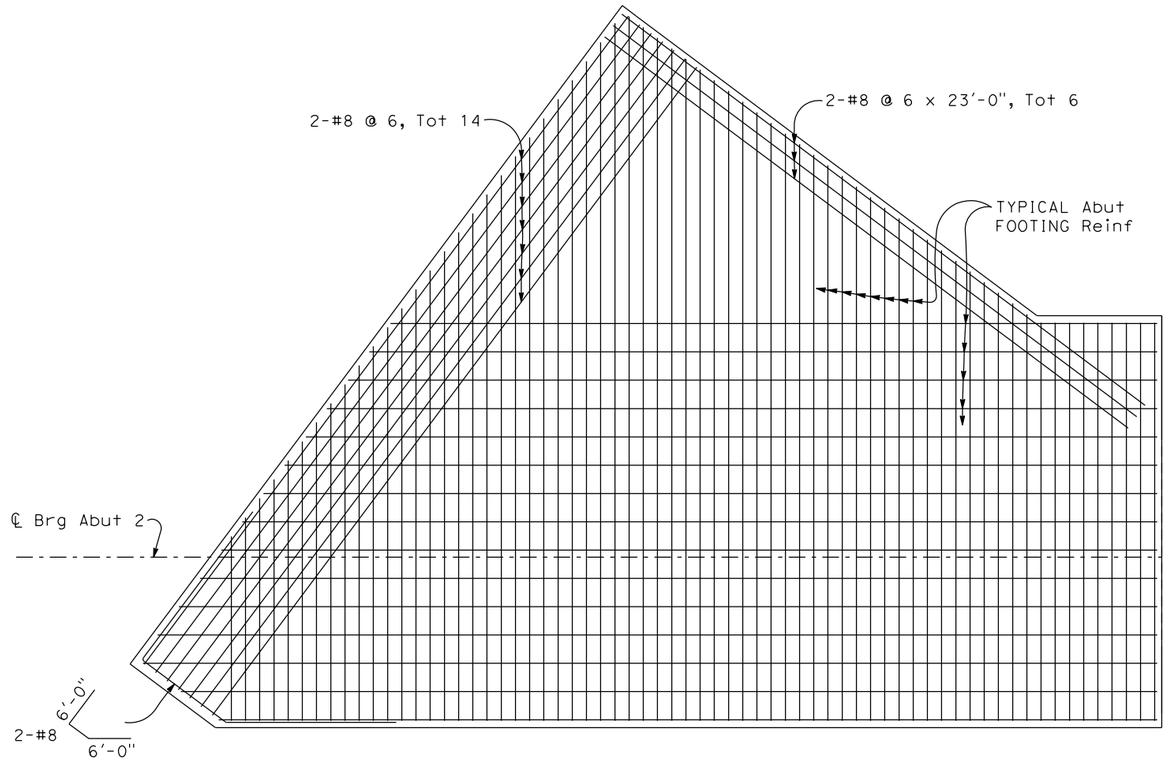

ABUTMENT 2 - PART FOOTING REINFORCEMENT PLAN

⅜" = 1'-0"

DIST	COUNTY	ROUTE	POST MILES TOTAL PROJECT	SHEET No	TOTAL SHEETS
03	Sut/Yub	Local			

REGISTERED CIVIL ENGINEER — DATE

REGISTERED PROFESSIONAL ENGINEER — MASON LEE HANCOCK — No. 75048 — Exp. 12-31-17 — CIVIL — STATE OF CALIFORNIA

PLANS APPROVAL DATE

CITY OF YUBA CITY
1201 CIVIC CENTER BOULEVARD
YUBA CITY, CA 95993

Dokken Engineering
110 Blue Ravine Rd, Suite 200
Folsom, CA 95630 (916) 858-0642

DESIGN OVERSIGHT

SIGN OFF DATE

	BY	CHECKED
DESIGN	M. Hancock	T. Osterkamp
DETAILS	K. Dang	
QUANTITIES		

PREPARED FOR THE STATE OF CALIFORNIA DEPARTMENT OF TRANSPORTATION

T. Osterkamp
PROJECT ENGINEER

BRIDGE NO. 18C-0055
POST MILES

2ND STREET UNDERCROSSING
ABUTMENT DETAILS NO. 4

DESIGN DETAIL SHEET (ENGLISH) (REV.7/16/10)

ORIGINAL SCALE IN INCHES FOR REDUCED PLANS 0 1 2 3

UNIT:
PROJECT NUMBER & PHASE: CONTRACT NO.:

DISREGARD PRINTS BEARING EARLIER REVISION DATES →

REVISION DATES: - | | | | |

SHEET 11 OF 26

FILE => J:\1858_5th_St_BR\517\2nd BRIDGE\1858BAD05.dgn

USERNAME => untitled DATE PLOTTED => 8/12/2016 TIME PLOTTED => 10:16:04 AM

DIST	COUNTY	ROUTE	POST MILES TOTAL PROJECT	SHEET No	TOTAL SHEETS
03	Sut/Yub	Local			

REGISTERED CIVIL ENGINEER DATE

PLANS APPROVAL DATE

REGISTERED PROFESSIONAL ENGINEER — MASON LEE HANCOCK — No. 75048 — Exp. 12-31-17 — CIVIL — STATE OF CALIFORNIA

CITY OF YUBA CITY
1201 CIVIC CENTER BOULEVARD
YUBA CITY, CA 95993

Dokken Engineering
110 Blue Ravine Rd, Suite 200
Folsom, CA 95630 (916) 858-0642

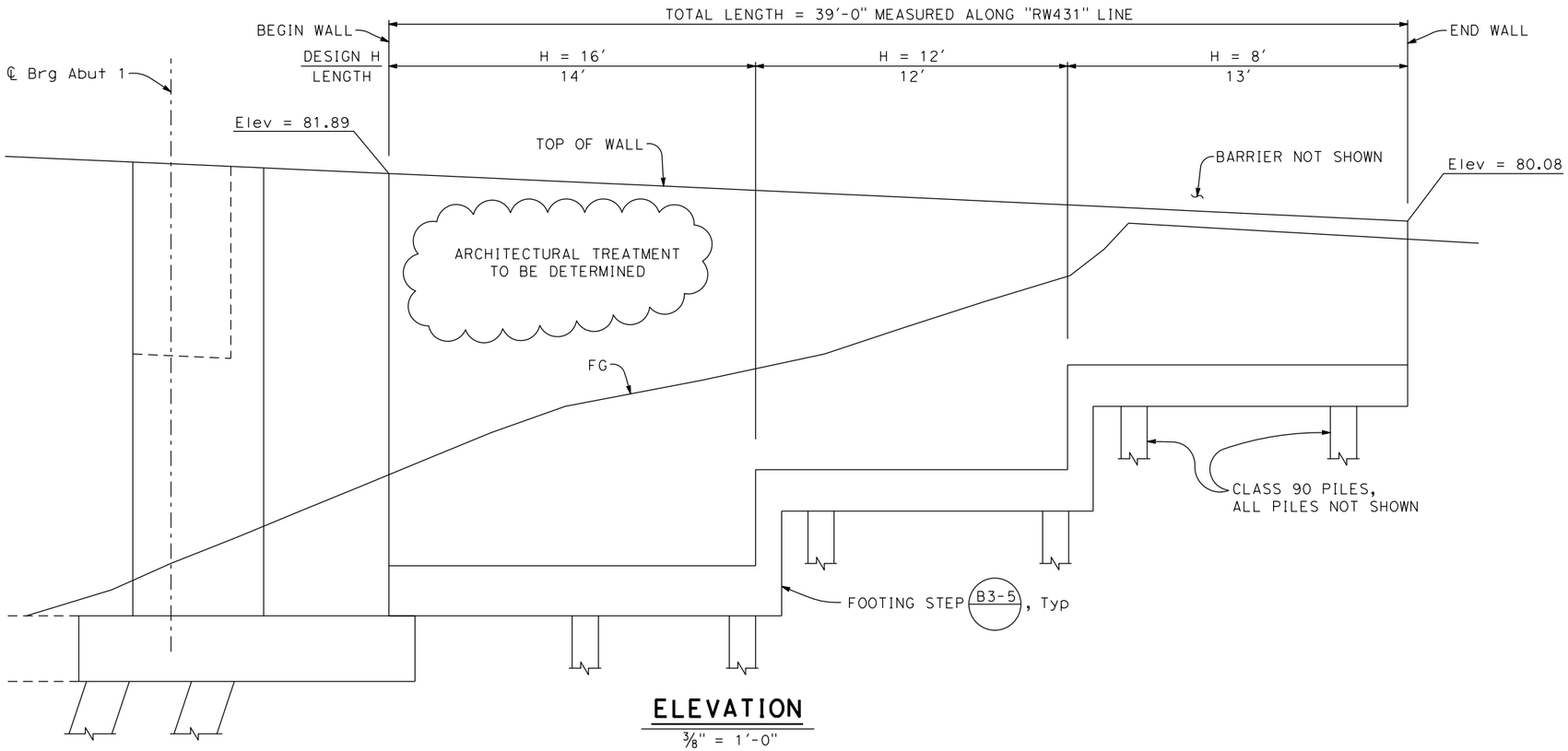

ELEVATION

3/8" = 1'-0"

LEGEND:

Denotes vertical pile

Denotes pile battered 1:3

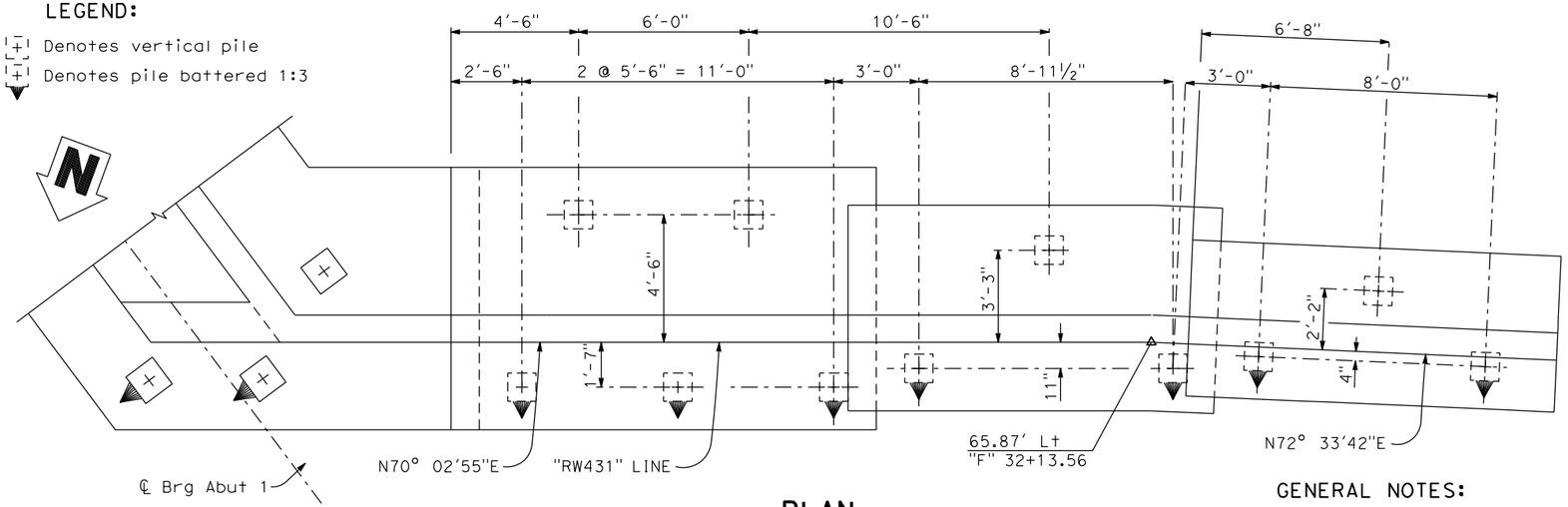

PLAN

3/8" = 1'-0"

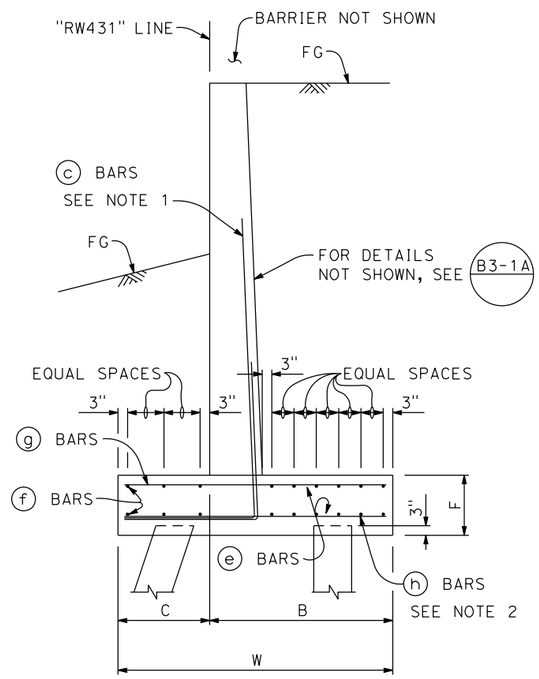

TYPICAL WALL SECTION

NO SCALE

FOOTING DIMENSIONS			
DESIGN H	8'	12'	16'
W	5'-6"	7'-3"	9'-3"
C	1'-10"	2'-5"	3'-1"
B	3'-8"	4'-10"	6'-2"
F	1'-7"	1'-7"	1'-11"
TOTAL ⓔ BARS	6-#5	12-#6	10-#6
TOTAL ⓕ BARS	6-#5	6-#6	8-#6
ⓖ BARS	#5 @ 9	#6 @ 9	#6 @ 6
ⓗ BARS	#5 @ 9	#5 @ 9	#5 @ 6

GENERAL NOTES:

1. All ⓒ bars shall extend to the toe of the footing.
2. Bundle ⓗ bars with ⓒ bars.

DESIGN OVERSIGHT

SIGN OFF DATE

	BY	CHECKED
DESIGN	M. Hancock	T. Osterkamp
DETAILS	K. Dang	
QUANTITIES		

PREPARED FOR THE STATE OF CALIFORNIA DEPARTMENT OF TRANSPORTATION

T. Osterkamp
PROJECT ENGINEER

BRIDGE NO. 18C-0055
POST MILES

2ND STREET UNDERCROSSING
RETAINING WALL NO. 431

DESIGN DETAIL SHEET (ENGLISH) (REV.7/16/10)

ORIGINAL SCALE IN INCHES FOR REDUCED PLANS 0 1 2 3

UNIT:
PROJECT NUMBER & PHASE:
CONTRACT NO.:

DISREGARD PRINTS BEARING EARLIER REVISION DATES →

REVISION DATES				SHEET	OF
-				12	26

FILE => J:\1858_5th_St_BR\517\2nd BRIDGE\1858BAD06.dgn

USERNAME => untitled DATE PLOTTED => 8/12/2016 TIME PLOTTED => 10:16:05 AM

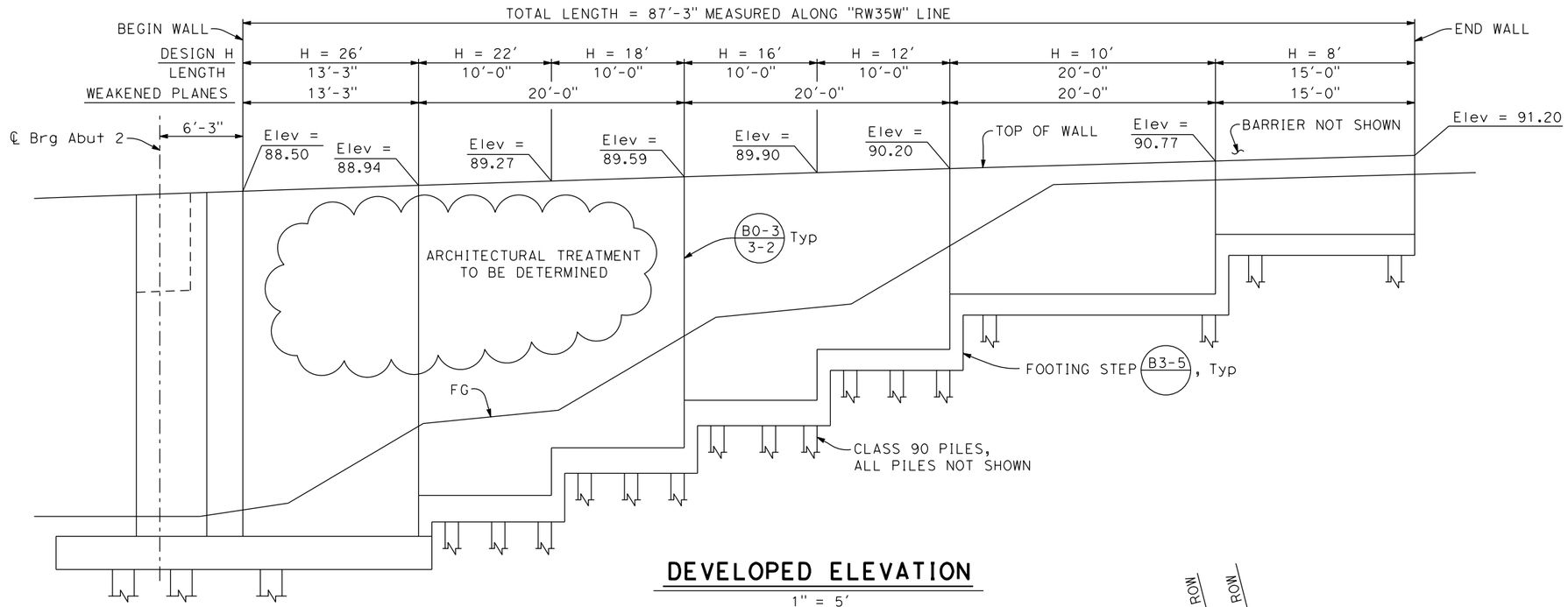

DEVELOPED ELEVATION

1" = 5'

LEGEND:

- Denotes vertical pile
- Denotes pile battered 1:3

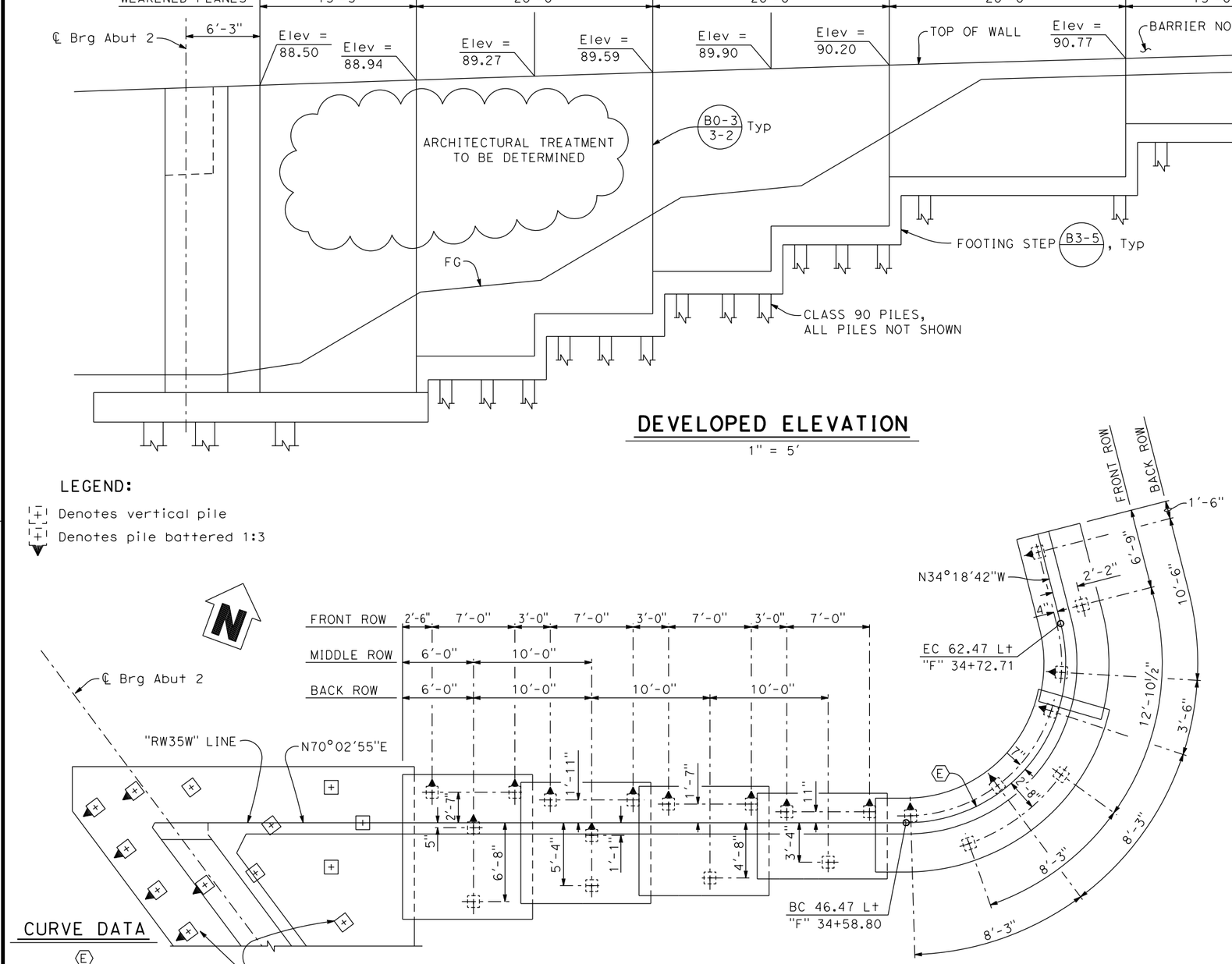

CURVE DATA

(E)

R = 13.50'
△ = 104°21'37"
T = 17.39'
L = 24.59'

PLAN

1" = 5'

GENERAL NOTES:

1. All (c) bars shall extend to the toe of the footing.
2. Bundle (h) bars with (c) bars.

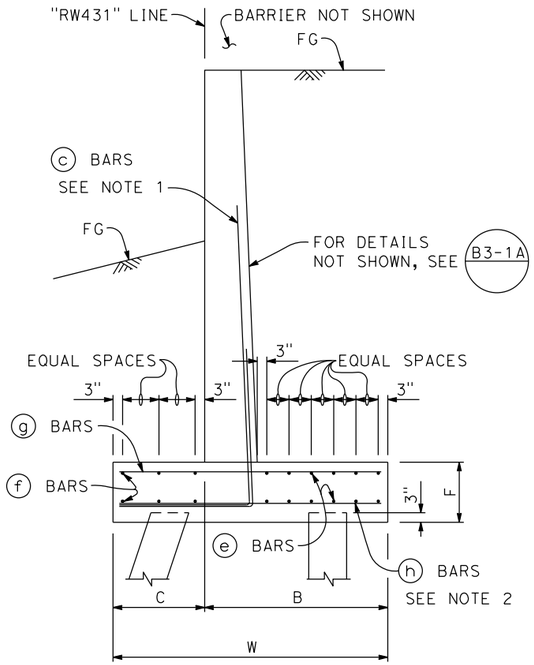

TYPICAL WALL SECTION

NO SCALE

FOOTING DIMENSIONS							
DESIGN H	8'	10'	12'	16'	18'	22'	26'
W	5'-6"	6'-3"	7'-3"	9'-3"	10'-3"	12'-3"	14'-3"
C	1'-10"	2'-1"	2'-5"	3'-1"	3'-5"	4'-1"	4'-9"
B	3'-8"	4'-2"	4'-10"	6'-2"	6'-10"	8'-2"	9'-6"
F	1'-7"	1'-7"	1'-7"	1'-7"	1'-11"	2'-0"	2'-8"
TOTAL (e) BARS	6-#5	10-#6	12-#6	10-#6	16-#6	14-#6	14-#6
TOTAL (f) BARS	6-#5	6-#5	6-#6	8-#6	8-#6	10-#6	12-#6
(g) BARS	#5 @ 9	#6 @ 9	#6 @ 9	#6 @ 6	#6 @ 5	#9 @ 6	#10 @ 6
(h) BARS	#5 @ 9	#5 @ 9	#5 @ 9	#5 @ 6	#5 @ 5	#5 @ 6	#5 @ 6

DIST	COUNTY	ROUTE	POST MILES TOTAL PROJECT	SHEET No	TOTAL SHEETS
03	Sut/Yub	Local			

REGISTERED CIVIL ENGINEER — DATE

PLANS APPROVAL DATE

REGISTERED PROFESSIONAL ENGINEER — MASON LEE HANCOCK — No. 75048 — Exp. 12-31-17 — CIVIL — STATE OF CALIFORNIA

CITY OF YUBA CITY
1201 CIVIC CENTER BOULEVARD
YUBA CITY, CA 95993

Dokken Engineering
110 Blue Ravine Rd, Suite 200
Folsom, CA 95630 (916) 858-0642

DESIGN OVERSIGHT

SIGN OFF DATE

	BY	CHECKED
DESIGN	M. Hancock	T. Osterkamp
DETAILS	K. Dang	
QUANTITIES		

PREPARED FOR THE STATE OF CALIFORNIA DEPARTMENT OF TRANSPORTATION

T. Osterkamp
PROJECT ENGINEER

BRIDGE NO. 18C-0055
POST MILES

2ND STREET UNDERCROSSING
RETAINING WALL NO. 35W

DESIGN DETAIL SHEET (ENGLISH) (REV.7/16/10)

ORIGINAL SCALE IN INCHES FOR REDUCED PLANS 0 1 2 3

UNIT:
PROJECT NUMBER & PHASE:
CONTRACT NO.:

DISREGARD PRINTS BEARING EARLIER REVISION DATES →

REVISION DATES | SHEET 13 | OF 26

FILE => J:\1858_5th_St_BR\517\2nd BRIDGE\1858BAD07.dgn

USERNAME => untitled DATE PLOTTED => 8/12/2016 TIME PLOTTED => 10:16:05 AM

DIST	COUNTY	ROUTE	POST MILES TOTAL PROJECT	SHEET No	TOTAL SHEETS
03	Sut/Yub	Local			

REGISTERED CIVIL ENGINEER _____ DATE _____

PLANS APPROVAL DATE _____

REGISTERED PROFESSIONAL ENGINEER
MASON LEE HANCOCK
No. 75048
Exp. 12-31-17
CIVIL
STATE OF CALIFORNIA

CITY OF YUBA CITY
1201 CIVIC CENTER BOULEVARD
YUBA CITY, CA 95993

Dokken Engineering
110 Blue Ravine Rd, Suite 200
Folsom, CA 95630 (916) 858-0642

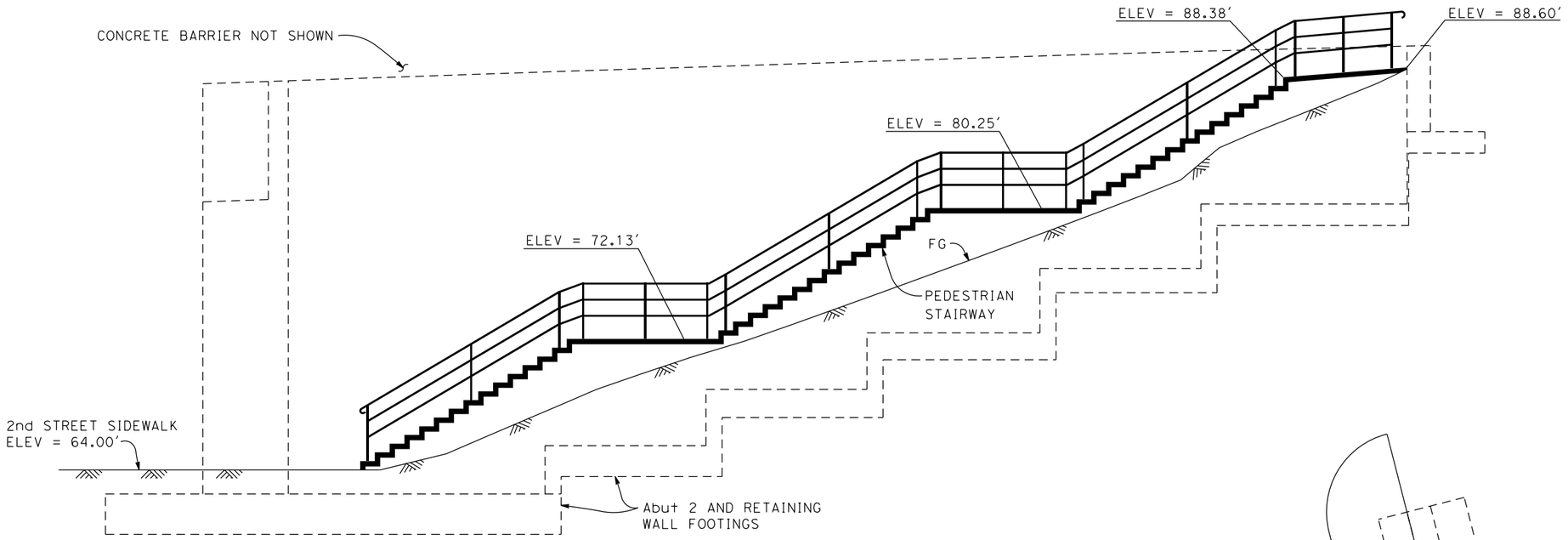

ELEVATION
1/4" = 1'-0"

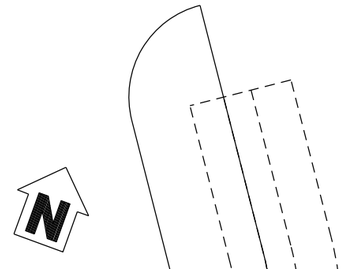

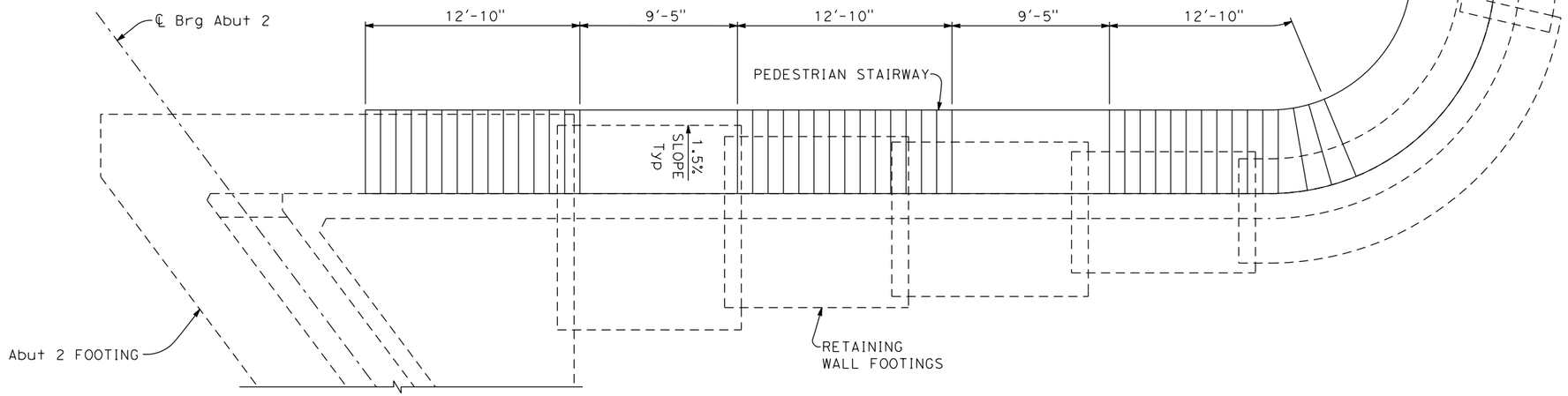

PLAN
1/4" = 1'-0"

DESIGN OVERSIGHT _____

SIGN OFF DATE _____

	BY	CHECKED
DESIGN	M. Hancock	T. Osterkamp
DETAILS	K. Dang	
QUANTITIES		

PREPARED FOR THE STATE OF CALIFORNIA
DEPARTMENT OF TRANSPORTATION

T. Osterkamp
PROJECT ENGINEER

BRIDGE NO. 18C-0055
POST MILES

2ND STREET UNDERCROSSING
PEDESTRIAN STAIRWAY DETAILS

DESIGN DETAIL SHEET (ENGLISH) (REV.7/16/10)

ORIGINAL SCALE IN INCHES FOR REDUCED PLANS 0 1 2 3

UNIT:
PROJECT NUMBER & PHASE: CONTRACT NO.:

DISREGARD PRINTS BEARING EARLIER REVISION DATES →

REVISION DATES					SHEET	OF
-					14	26

FILE => J:\1858_5th_St_BR\517\2nd BRIDGE\1858BAD8.dgn

USERNAME => untitled DATE PLOTTED => 8/12/2016 TIME PLOTTED => 10:16:06 AM

DIST	COUNTY	ROUTE	POST MILES TOTAL PROJECT	SHEET No	TOTAL SHEETS
03	Sut/Yub	Local			

REGISTERED CIVIL ENGINEER DATE

PLANS APPROVAL DATE

REGISTERED PROFESSIONAL ENGINEER — MASON LEE HANCOCK — No. 75048 — Exp. 12-31-17 — CIVIL — STATE OF CALIFORNIA

CITY OF YUBA CITY
1201 CIVIC CENTER BOULEVARD
YUBA CITY, CA 95993

Dokken Engineering
110 Blue Ravine Rd, Suite 200
Folsom, CA 95630 (916) 858-0642

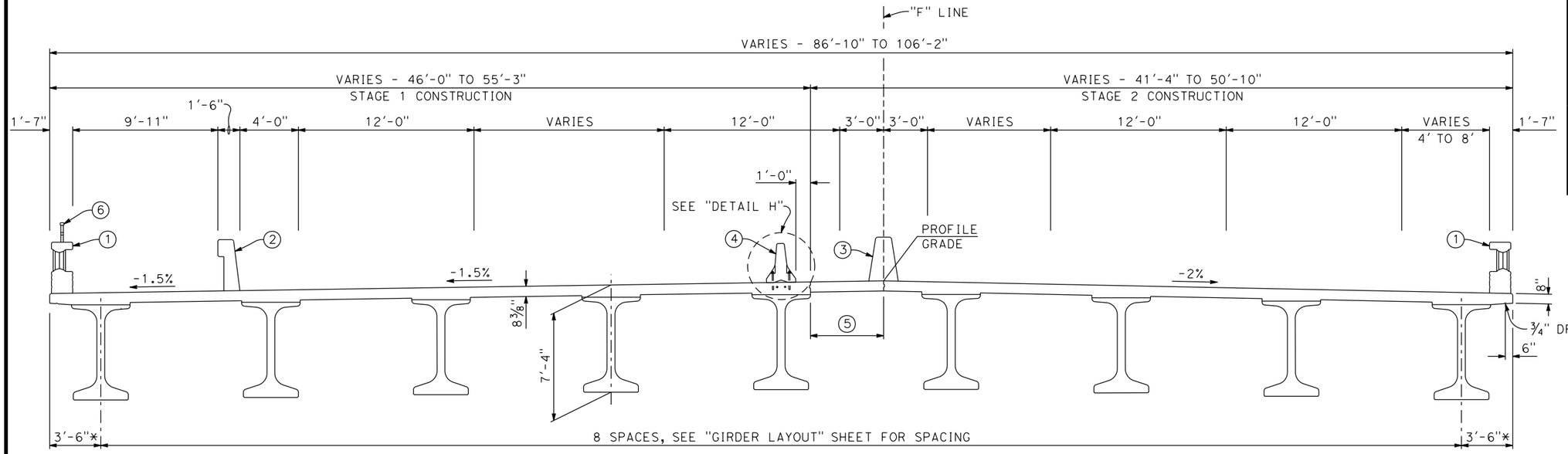

* MEASURED NORMAL TO EDGE OF DECK

TYPICAL SECTION

1/4" = 1'-0"

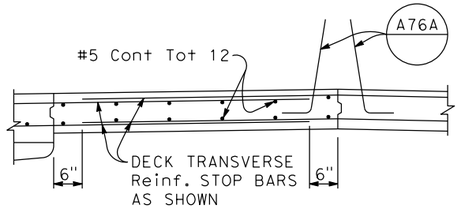

CLOSURE POUR DETAIL

3/4" = 1'-0"

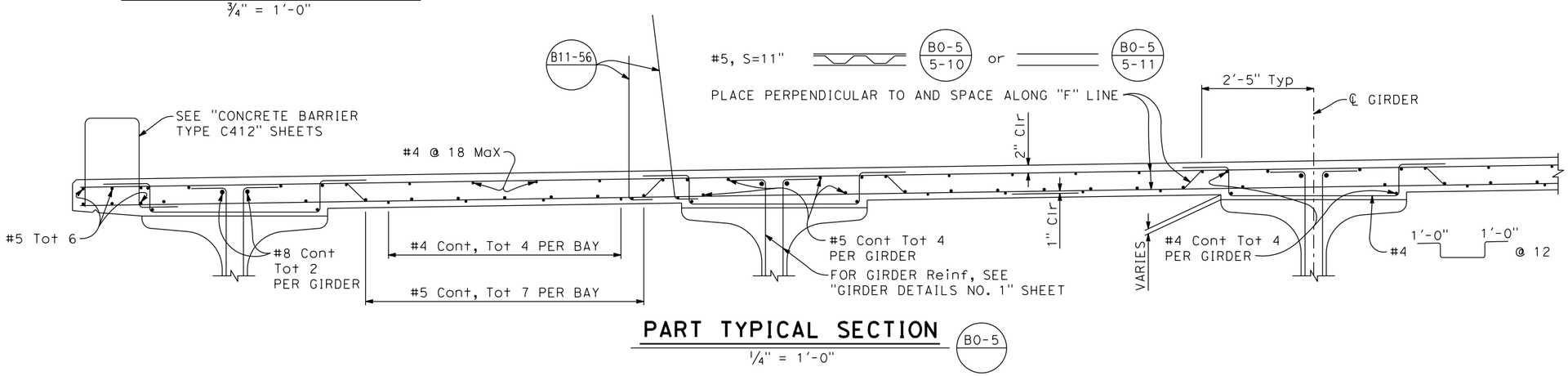

PART TYPICAL SECTION

1/4" = 1'-0"

B0-5

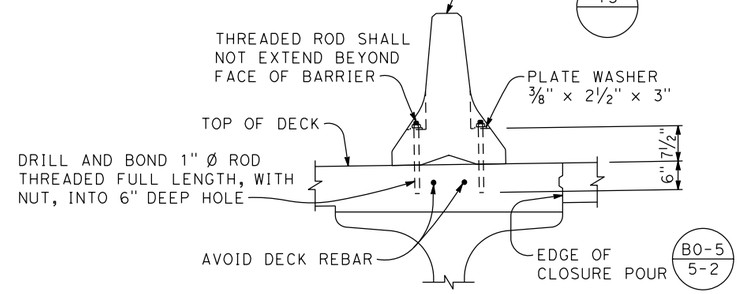

DETAIL H

3/4" = 1'-0"

NOTE:

Dimensions shown are normal to "F" Line unless otherwise noted.

LEGEND

1. Denotes Concrete Barrier Type C412
2. Denotes Concrete Barrier Type 742 (Mod)
   Denotes Concrete Barrier Type 60A
4. Denotes Temporary Railing (Type K)
5. Denotes 5'-3" Min & Varies Closure Pour
6. Tubular Hand Railing

DESIGN OVERSIGHT		DESIGN	BY M. Hancock	CHECKED T. Osterkamp	PREPARED FOR THE STATE OF CALIFORNIA DEPARTMENT OF TRANSPORTATION
SIGN OFF DATE		DETAILS	BY K. Dang	CHECKED	T. Osterkamp PROJECT ENGINEER
		QUANTITIES	BY	CHECKED	BRIDGE NO. 18C-0055 POST MILES

2ND STREET UNDERCROSSING
TYPICAL SECTION

DESIGN DETAIL SHEET (ENGLISH) (REV.7/16/10)

ORIGINAL SCALE IN INCHES FOR REDUCED PLANS 0 1 2 3

UNIT:
PROJECT NUMBER & PHASE: CONTRACT NO.:

DISREGARD PRINTS BEARING EARLIER REVISION DATES →

REVISION DATES					SHEET	OF
-					15	26

FILE => J:\1858_5th_St_BR\517\2nd BRIDGE\1858BTS01.dgn

USERNAME => untitled DATE PLOTTED => 8/12/2016 TIME PLOTTED => 10:16:06 AM

DIST	COUNTY	ROUTE	POST MILES TOTAL PROJECT	SHEET No	TOTAL SHEETS
03	Sut/Yub	Local			

REGISTERED CIVIL ENGINEER DATE

PLANS APPROVAL DATE

REGISTERED PROFESSIONAL ENGINEER — MASON LEE HANCOCK — No. 75048 — Exp. 12-31-17 — CIVIL — STATE OF CALIFORNIA

CITY OF YUBA CITY
1201 CIVIC CENTER BOULEVARD
YUBA CITY, CA 95993

Dokken Engineering
110 Blue Ravine Rd, Suite 200
Folsom, CA 95630 (916) 858-0642

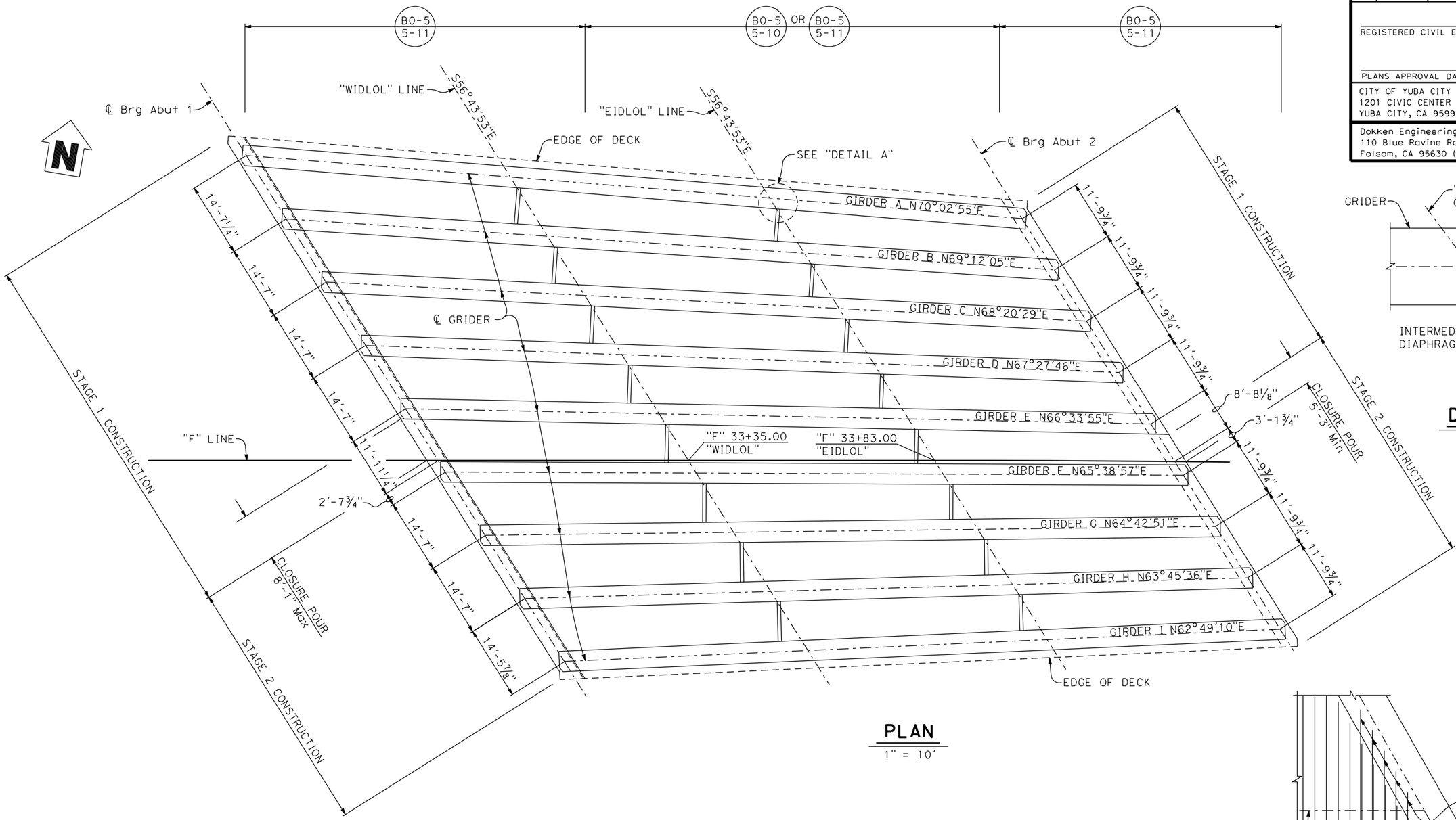

PLAN

1" = 10'

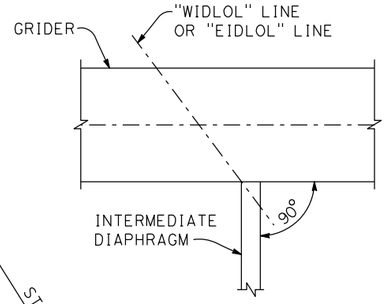

DETAIL A

3/8" = 1'-0"

NOTES:

1. Measured along edge of deck.
2. Extend transverse reinforcement 2'-0" into end diaphragm.

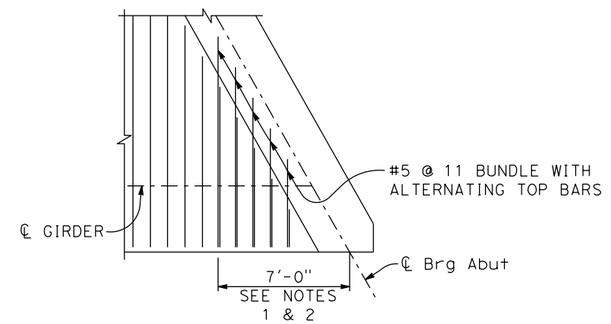

ACUTE CORNER DECK REINFORCEMENT DETAIL

1" = 10'

DESIGN OVERSIGHT		DESIGN	BY M. Hancock	CHECKED T. Osterkamp	PREPARED FOR THE STATE OF CALIFORNIA DEPARTMENT OF TRANSPORTATION	T. Osterkamp PROJECT ENGINEER	BRIDGE NO. 18C-0055
SIGN OFF DATE		DETAILS	BY K. Dang	CHECKED			POST MILES
DESIGN DETAIL SHEET (ENGLISH) (REV.7/16/10)		QUANTITIES	BY	CHECKED		UNIT: PROJECT NUMBER & PHASE: CONTRACT NO.:	DISREGARD PRINTS BEARING EARLIER REVISION DATES →

2ND STREET UNDERCROSSING
GIRDER LAYOUT

ORIGINAL SCALE IN INCHES FOR REDUCED PLANS 0 1 2 3

REVISION DATES: - | SHEET 16 | OF 26

FILE => J:\1858_5th_St_BR\517\2nd BRIDGE\1858BGL01.dgn

USERNAME => untitled DATE PLOTTED => 8/12/2016 TIME PLOTTED => 10:16:07 AM

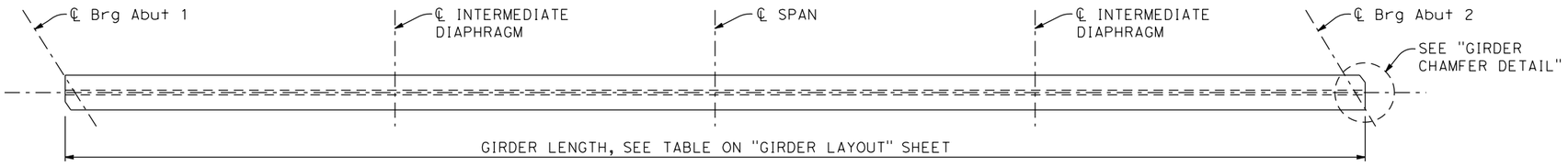

PLAN
NO SCALE

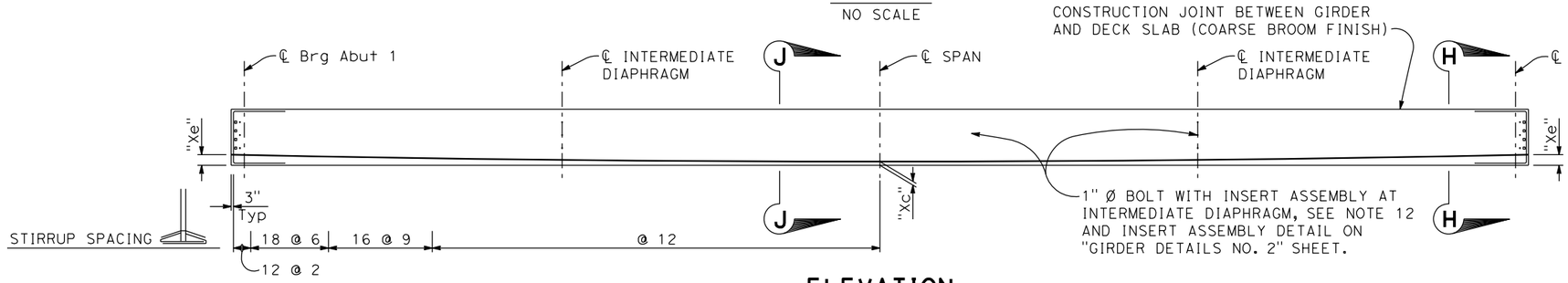

ELEVATION
NO SCALE

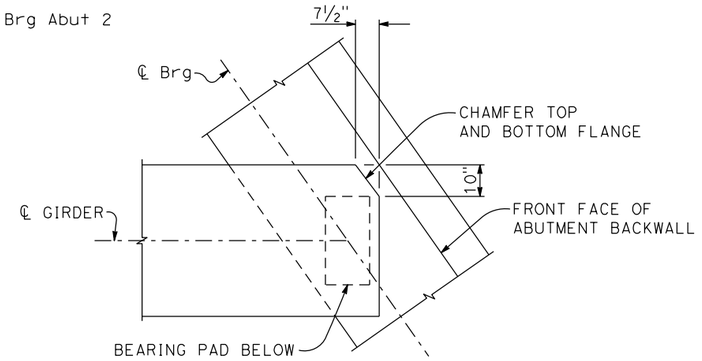

GIRDER CHAMFER DETAIL
½" = 1'-0"

GENERAL NOTES:
A.
B.

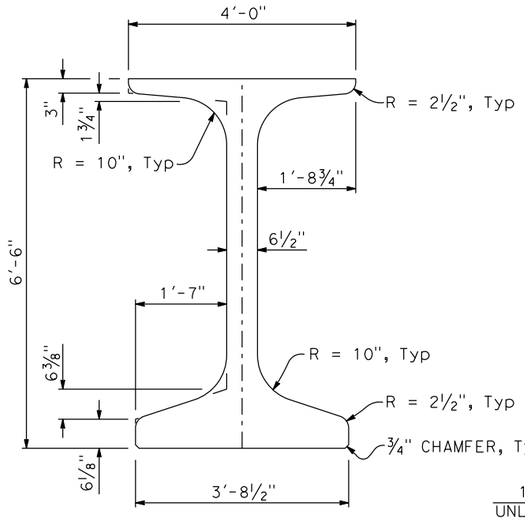

TYPICAL GIRDER SECTION
¾" = 1'-0"

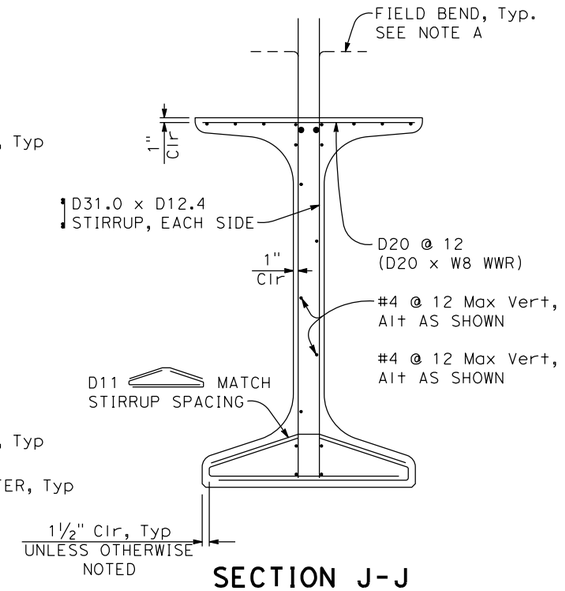

SECTION J-J
¾" = 1'-0"

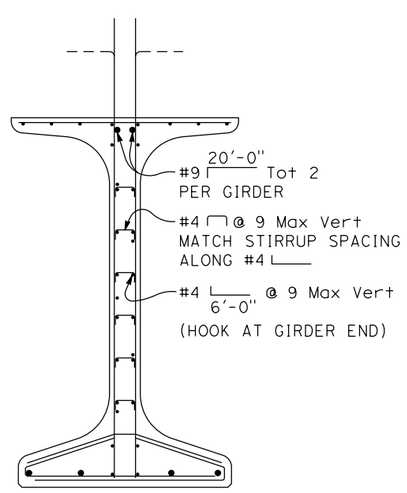

SECTION H-H
¾" = 1'-0"

PRESTRESSING NOTES:

1. The Jacking Force (P) is the jacking force required at the point of control along the span. The jacking force does not include any fabrication specific losses
2. The maximum tensile stress in the prestressing steel upon release shall not exceed 75% of the specified minimum ultimate tensile strength of the prestressing steel
3. The maximum temporary tensile stress (jacking stress) in the prestressing steel shall not exceed 80% of the specified minimum ultimate tensile strength of the prestressing steel
4. Concrete strength:
   f'ci is at time of initial stressing
   f'c is at 28 days
5. Deflection components are informational and will be used to set screed line elevations
6. Screed line elevations for deck concrete will be determined by the Engineer
7. Prestressing strand shall be 270 ksi low relaxation
8. As, Min is the minimum area required of prestressing steel
9. No more than 33% of the total number of strands and 50% of the strands per horizontal row may be debonded
10. Strand locations may be adjusted as approved by the Engineer
11. Girder stirrups shall be field bent after girder erection
12. Insert assemblies shall be parallel to ℄ Intermediate Diaphragms
13. For "Xe" and "Xc", see "GIRDER DETAILS NO. 2" sheet

DIST	COUNTY	ROUTE	POST MILES TOTAL PROJECT	SHEET No	TOTAL SHEETS
03	Sut/Yub	Local			

REGISTERED CIVIL ENGINEER — DATE

PLANS APPROVAL DATE

REGISTERED PROFESSIONAL ENGINEER — MASON LEE HANCOCK — No. 75048 — Exp. 12-31-17 — CIVIL — STATE OF CALIFORNIA

CITY OF YUBA CITY
1201 CIVIC CENTER BOULEVARD
YUBA CITY, CA 95993

Dokken Engineering
110 Blue Ravine Rd, Suite 200
Folsom, CA 95630 (916) 858-0642

DESIGN OVERSIGHT

SIGN OFF DATE

	BY	CHECKED
DESIGN	M. Hancock	T. Osterkamp
DETAILS	K. Dang	CHECKED
QUANTITIES	BY	CHECKED

PREPARED FOR THE STATE OF CALIFORNIA DEPARTMENT OF TRANSPORTATION

T. Osterkamp
PROJECT ENGINEER

BRIDGE NO. 18C-0055
POST MILES

2ND STREET UNDERCROSSING
GIRDER DETAILS NO. 1

DESIGN DETAIL SHEET (ENGLISH) (REV.7/16/10)

ORIGINAL SCALE IN INCHES FOR REDUCED PLANS 0 1 2 3

UNIT:
PROJECT NUMBER & PHASE: CONTRACT NO.:

DISREGARD PRINTS BEARING EARLIER REVISION DATES →

REVISION DATES

SHEET 17 OF 26

FILE => J:\1858_5th_St_BR\5|7\2nd BRIDGE\1858BGD01.dgn

USERNAME => untitled DATE PLOTTED => 8/12/2016 TIME PLOTTED => 10:16:07 AM

DIST	COUNTY	ROUTE	POST MILES TOTAL PROJECT	SHEET No	TOTAL SHEETS
03	Sut/Yub	Local			

REGISTERED CIVIL ENGINEER DATE

PLANS APPROVAL DATE

REGISTERED PROFESSIONAL ENGINEER — MASON LEE HANCOCK — No. 75048 — Exp. 12-31-17 — CIVIL — STATE OF CALIFORNIA

CITY OF YUBA CITY
1201 CIVIC CENTER BOULEVARD
YUBA CITY, CA 95993

Dokken Engineering
110 Blue Ravine Rd, Suite 200
Folsom, CA 95630 (916) 858-0642

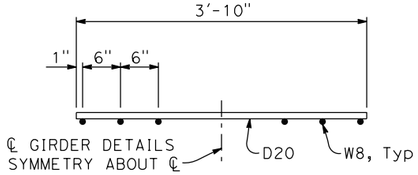

WWR-T

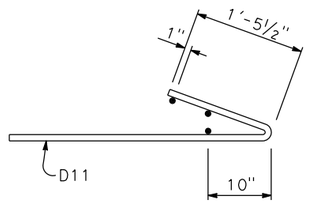

WWR-B

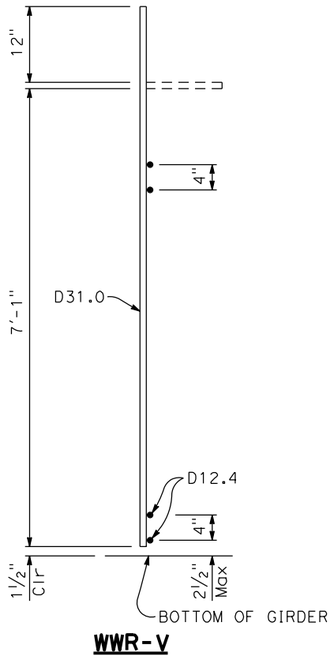

WWR-V

WELDED WIRE REINFORCEMENT DETAILS

1" = 1'-0"

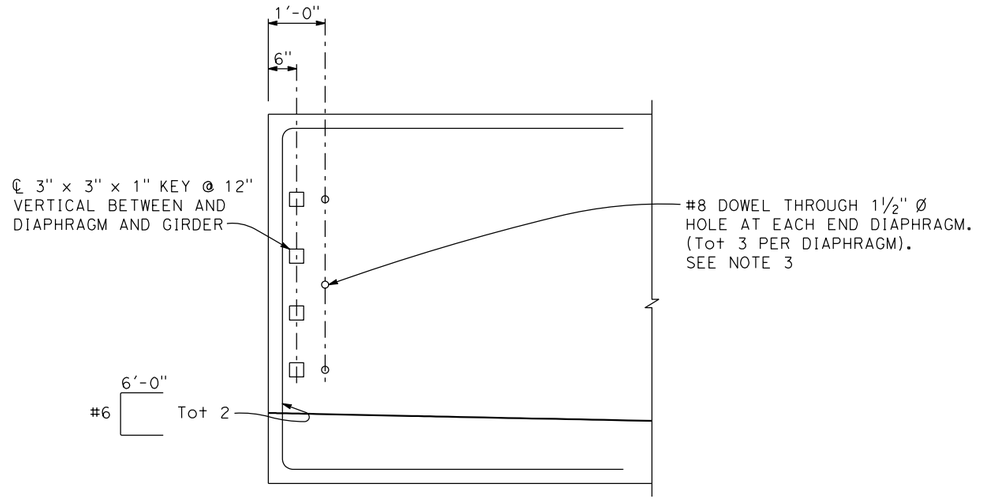

ELEVATION OF END GIRDER

¾" = 1'-0"

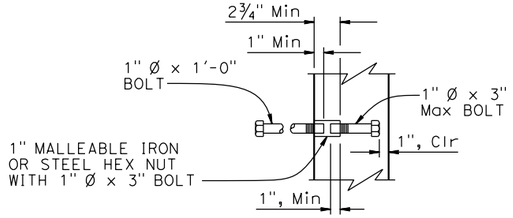

INSERT ASSEMBLY

NO SCALE

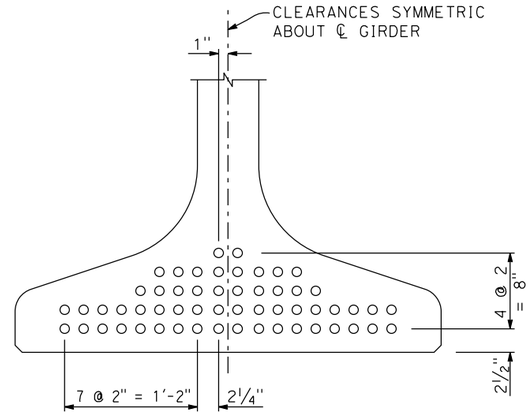

CLEARANCES FOR PRETENSIONED STRANDS

1½" = 1'-0"

NOTES:
1. Clearances shown are for 0.6" nominal diameter strands.
2. Approval by the Engineer is required for deviation.
3. Form holes shall be parallel to ℄ Brg Abut.
4. Measured along ℄ Girder.

LOCATION	GIRDER LENGT (NOTE 4)	GIRDER DEPTH	TOTAL No. OF STRANDS	JACKING FORCE (P) (kips)	CONCRETE STRENGTH (ksi)		MIDSPAN DEAD LOAD DEFLECTION (in)		NET STRAND CG	
									AT ENDS	AT MIDSPAN
					f'ci	f'c	DECK	RAIL	"Xe" (in)	"Xc" (in)
GIRDER A	153.14	6'-6"	52	2290	6.6	8.2	2.98	0.15	11.8	4.2
GIRDER B	151.49	6'-6"	66	2900	7.1	8.8	3.25	0.27	14.8	5.2
GIRDER C	149.88	6'-6"	64	2815	7.1	8.8	3.16	0.26	14.7	5.0
GIRDER D	148.31	6'-6"	60	2640	6.6	8.2	3.16	0.27	13.7	4.7
GIRDER E	146.77	6'-6"	58	2550	6.6	8.2	3.06	0.26	13.7	4.6
GIRDER F	145.27	6'-6"	58	2550	6.6	8.2	2.96	0.26	13.7	4.6
GIRDER G	143.81	6'-6"	58	2550	6.6	8.2	2.87	0.25	13.7	4.6
GIRDER H	142.39	6'-6"	58	2550	6.6	8.2	2.78	0.25	13.7	4.6
GIRDER I	141.05	6'-6"	54	2375	6.6	8.2	2.29	0.12	12.0	4.3

DESIGN OVERSIGHT

SIGN OFF DATE

	BY	CHECKED
DESIGN	M. Hancock	T. Osterkamp
DETAILS	K. Dang	
QUANTITIES		

PREPARED FOR THE STATE OF CALIFORNIA DEPARTMENT OF TRANSPORTATION

T. Osterkamp
PROJECT ENGINEER

BRIDGE NO. 18C-0055
POST MILES

2ND STREET UNDERCROSSING
GIRDER DETAILS NO. 2

DESIGN DETAIL SHEET (ENGLISH) (REV.7/16/10)

ORIGINAL SCALE IN INCHES FOR REDUCED PLANS 0 1 2 3

UNIT:
PROJECT NUMBER & PHASE:
CONTRACT NO.:

DISREGARD PRINTS BEARING EARLIER REVISION DATES →

REVISION DATES				SHEET	OF
-				18	26

FILE => J:\1858_5th_St_BR\517\2nd BRIDGE\1858BGD02.dgn

USERNAME => unfitted DATE PLOTTED => 8/12/2016 TIME PLOTTED => 10:16:08 AM

DIST	COUNTY	ROUTE	POST MILES TOTAL PROJECT	SHEET No	TOTAL SHEETS
03	Sut/Yub	Local			

REGISTERED CIVIL ENGINEER _____ DATE _____

PLANS APPROVAL DATE _____

REGISTERED PROFESSIONAL ENGINEER
MASON LEE HANCOCK
No. 75048
Exp. 12-31-17
CIVIL
STATE OF CALIFORNIA

CITY OF YUBA CITY
1201 CIVIC CENTER BOULEVARD
YUBA CITY, CA 95993

Dokken Engineering
110 Blue Ravine Rd, Suite 200
Folsom, CA 95630 (916) 858-0642

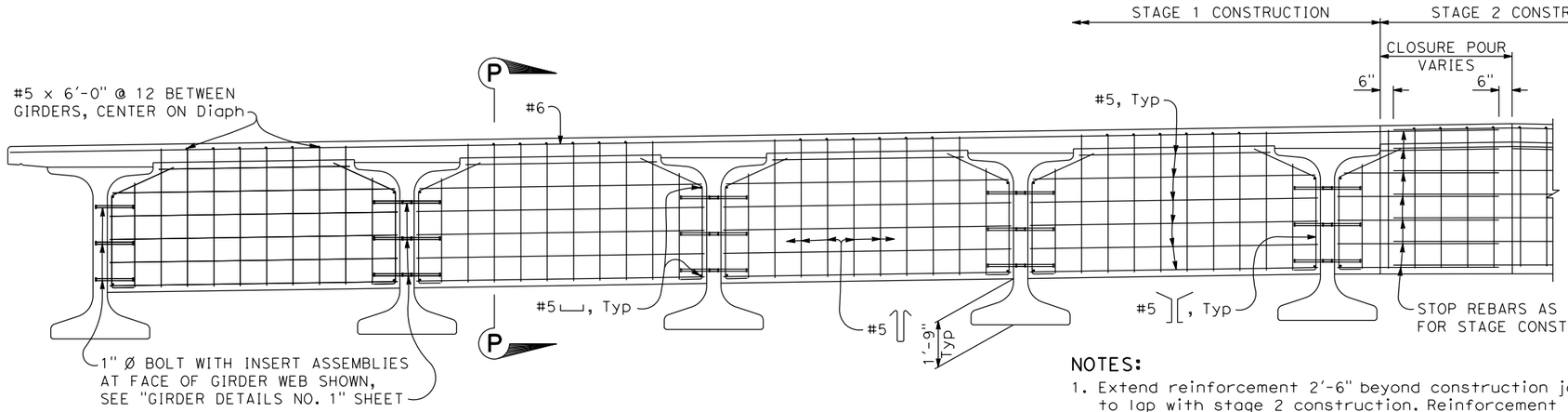

INTERMEDIATE DIAPHRAGM

3/8" = 1'-0"

NOTES:

1. Extend reinforcement 2'-6" beyond construction joint to lap with stage 2 construction. Reinforcement may be bent as necessary.
2. Hooks reinforcement inward below girder top flange.
3. Intermediate diaphragm may be vertical or normal to deck grade.

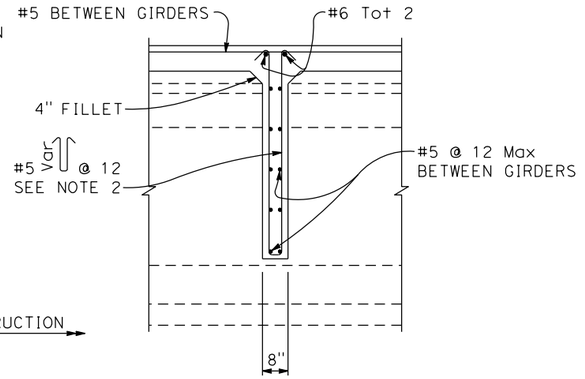

SECTION P-P

1/2" = 1'-0"

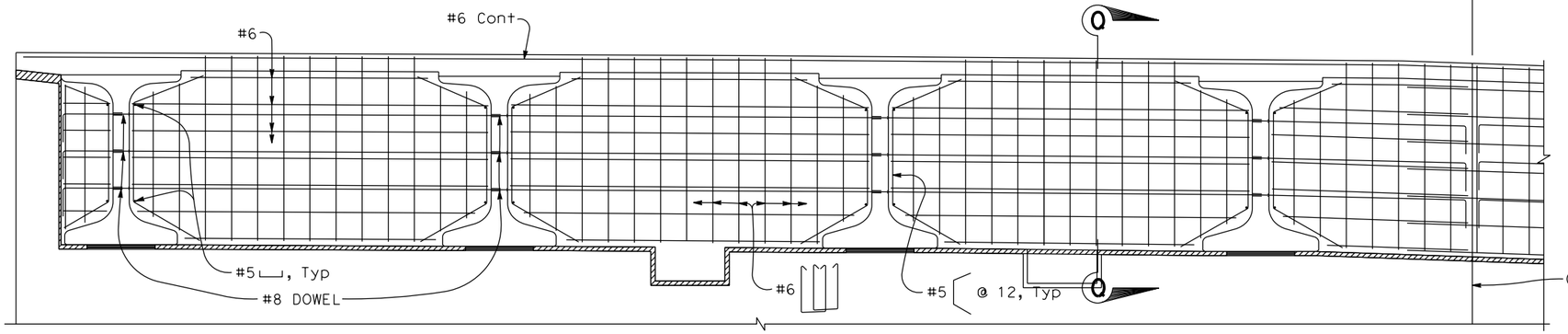

PART ELEVATION - END DIAPHRAGM

3/8" = 1'-0"

ABUTMENT 1 SHOWN, ABUTMENT 2 SIMILAR.

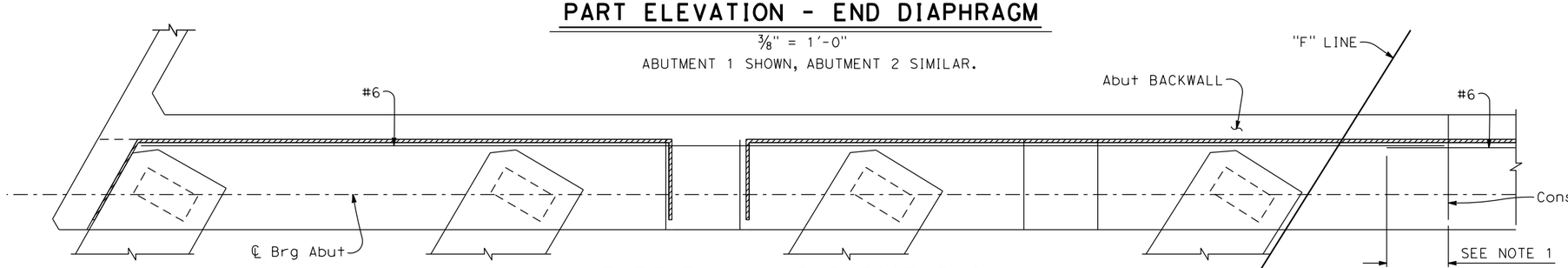

PART PLAN - END DIAPHRAGM

3/8" = 1'-0"

ABUTMENT 1 SHOWN, ABUTMENT 2 SIMILAR.

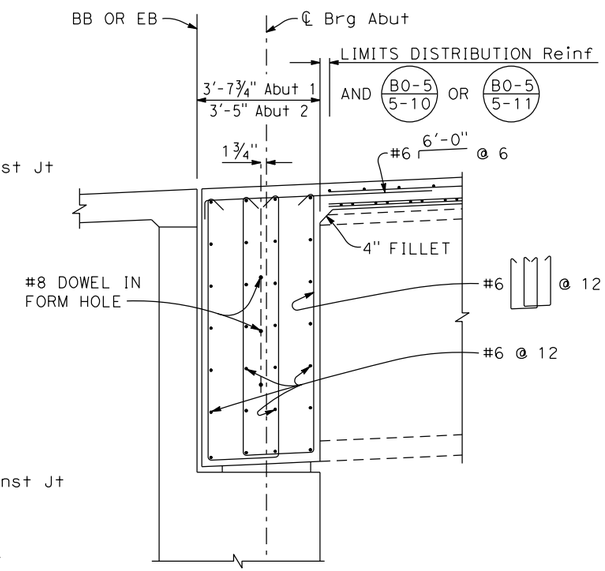

SECTION Q-Q

1/2" = 1'-0"

DESIGN OVERSIGHT		DESIGN	BY M. Hancock	CHECKED T. Osterkamp	PREPARED FOR THE STATE OF CALIFORNIA DEPARTMENT OF TRANSPORTATION
SIGN OFF DATE		DETAILS	BY K. Dang	CHECKED	
		QUANTITIES	BY	CHECKED	

T. Osterkamp
PROJECT ENGINEER

BRIDGE NO. 18C-0055
POST MILES

2ND STREET UNDERCROSSING
GIRDER DETAILS NO. 3

DESIGN DETAIL SHEET (ENGLISH) (REV.7/16/10)

ORIGINAL SCALE IN INCHES FOR REDUCED PLANS 0 1 2 3

UNIT:
PROJECT NUMBER & PHASE: CONTRACT NO.:

DISREGARD PRINTS BEARING EARLIER REVISION DATES →

REVISION DATES -

SHEET 19 OF 26

FILE => J:\1858_5th_St_BR\517\2nd BRIDGE\1858BGD03.dgn

USERNAME => untitled DATE PLOTTED => 8/12/2016 TIME PLOTTED => 10:16:08 AM

DIST	COUNTY	ROUTE	POST MILES TOTAL PROJECT	SHEET No	TOTAL SHEETS
03	Sut/Yub	Local			

REGISTERED CIVIL ENGINEER DATE

PLANS APPROVAL DATE

REGISTERED PROFESSIONAL ENGINEER — MASON LEE HANCOCK — No. 75048 — Exp. 12-31-17 — CIVIL — STATE OF CALIFORNIA

CITY OF YUBA CITY
1201 CIVIC CENTER BOULEVARD
YUBA CITY, CA 95993

Dokken Engineering
110 Blue Ravine Rd, Suite 200
Folsom, CA 95630 (916) 858-0642

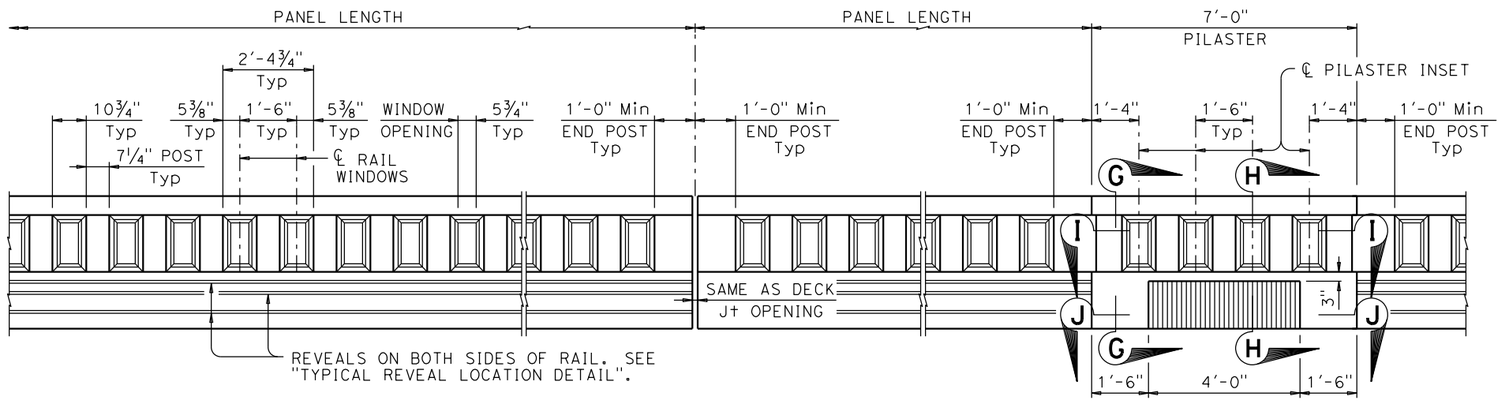

AT ABUTMENTS AND HINGES

AT PIERS

NOTES:

1. FOR SECTIONS G-G, H-H, I-I, AND J-J, SEE "CONCRETE BARRIER TYPE C412 NO. 2" SHEET

PART ELEVATION

½" = 1'-0"

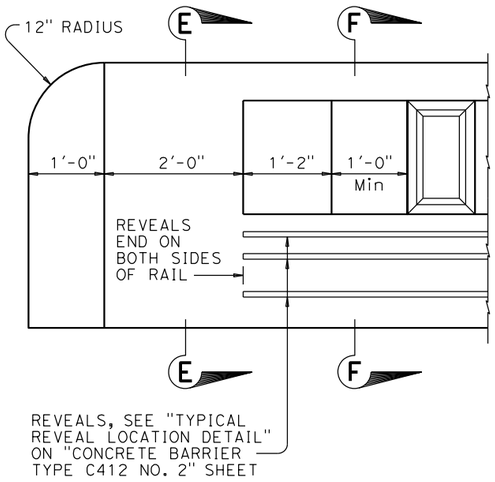

ELEVATION AT END SECTION

1" = 1'-0"

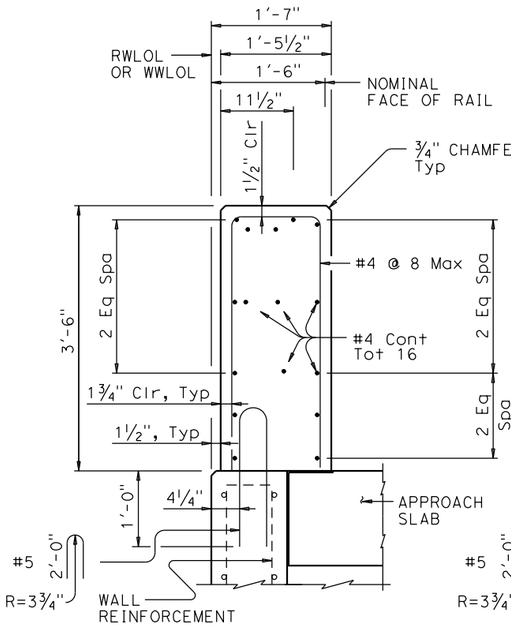

SECTION E-E ON WINGWALLS OR RETAINING WALLS

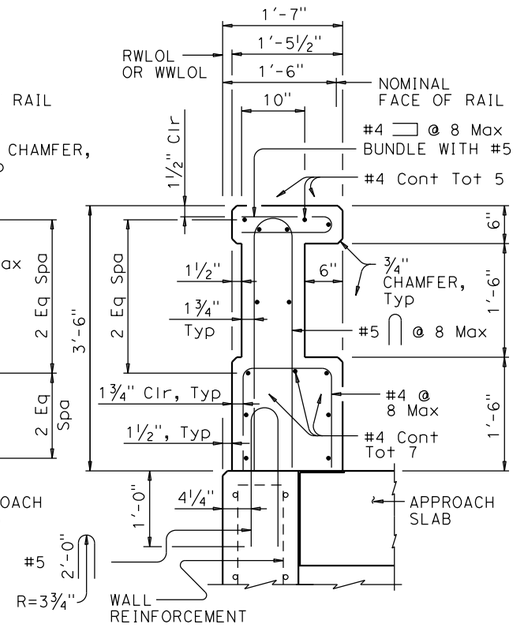

SECTION F-F ON WINGWALLS OR RETAINING WALLS

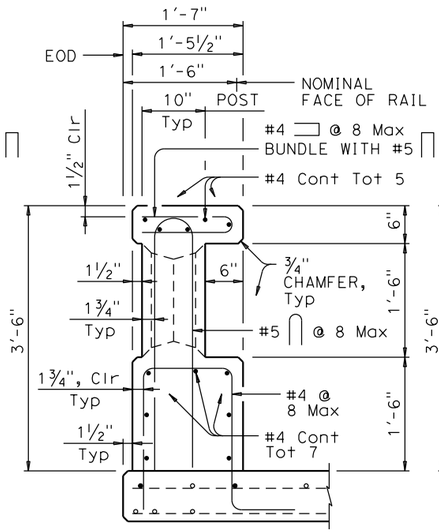

ON BRIDGE DECK AT POST

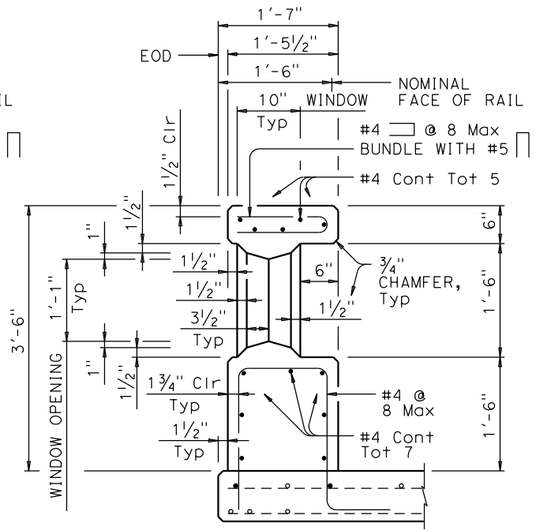

ON BRIDGE DECK AT WINDOW

SECTIONS THRU RAIL

1" = 1'-0"

(REVEALS NOT SHOWN FOR CLARITY. SEE "TYPICAL REVEAL LOCATION DETAIL" ON "CONCRETE BARRIER TYPE C412 NO. 2" SHEET)

DESIGN OVERSIGHT		DESIGN	BY M. Hancock	CHECKED T. Osterkamp	PREPARED FOR THE STATE OF CALIFORNIA DEPARTMENT OF TRANSPORTATION	T. Osterkamp PROJECT ENGINEER	BRIDGE NO. 18C-0055
SIGN OFF DATE		DETAILS	BY K. Dang	CHECKED			POST MILES
		QUANTITIES	BY	CHECKED			

2ND STREET UNDERCROSSING

CONCRETE BARRIER TYPE C412 NO. 1

DESIGN DETAIL SHEET (ENGLISH) (REV.7/16/10)

ORIGINAL SCALE IN INCHES FOR REDUCED PLANS 0 1 2 3

UNIT: PROJECT NUMBER & PHASE: CONTRACT NO.:

DISREGARD PRINTS BEARING EARLIER REVISION DATES →

REVISION DATES				SHEET	OF
-				20	26

FILE => J:\1858_5th_St_BR\517\2nd BRIDGE\1858BTXRAIL01.dgn

USERNAME => unfitted DATE PLOTTED => 8/12/2016 TIME PLOTTED => 10:16:09 AM

DIST	COUNTY	ROUTE	POST MILES TOTAL PROJECT	SHEET No	TOTAL SHEETS
03	Sut/Yub	Local			

REGISTERED CIVIL ENGINEER DATE

PLANS APPROVAL DATE

REGISTERED PROFESSIONAL ENGINEER — MASON LEE HANCOCK — No. 75048 — Exp. 12-31-17 — CIVIL — STATE OF CALIFORNIA

CITY OF YUBA CITY
1201 CIVIC CENTER BOULEVARD
YUBA CITY, CA 95993

Dokken Engineering
110 Blue Ravine Rd, Suite 200
Folsom, CA 95630 (916) 858-0642

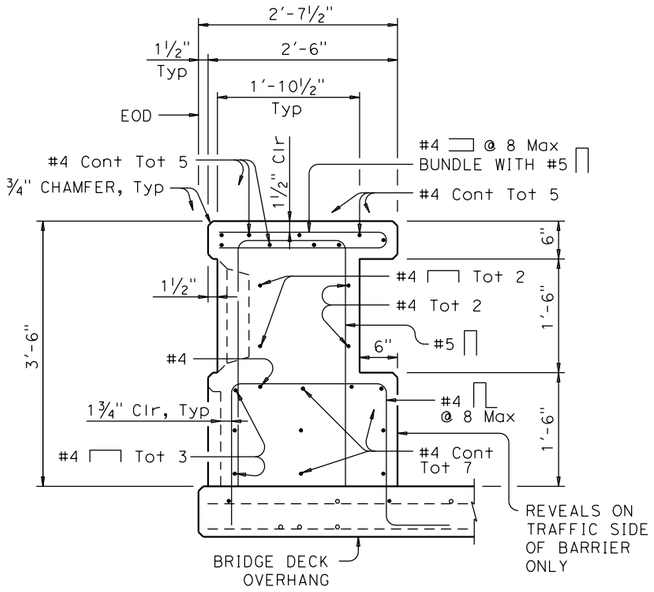

SECTION G-G

1" = 1'-0"

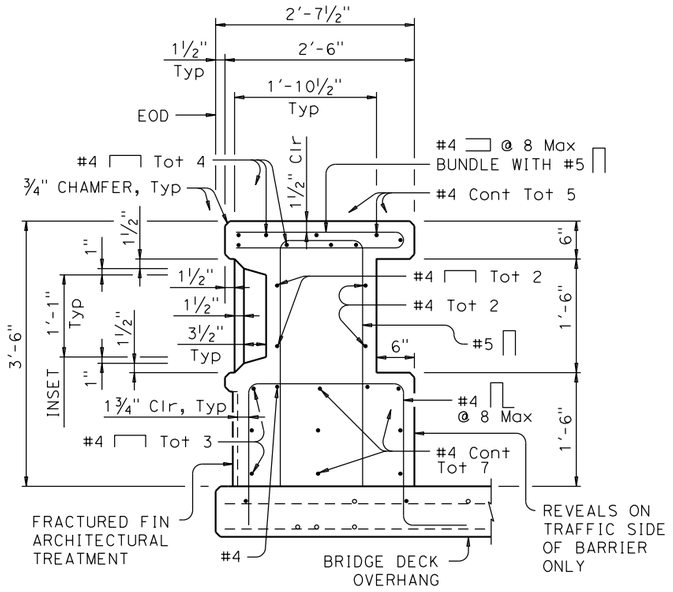

SECTION H-H

1" = 1'-0"

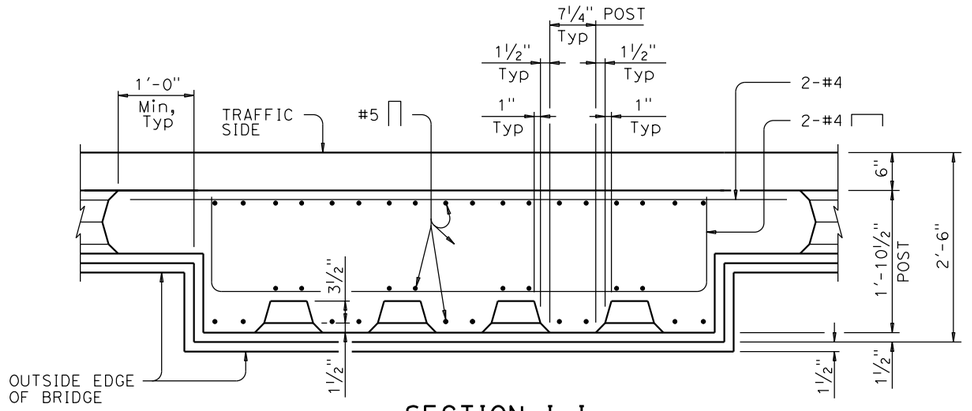

SECTION I-I

1" = 1'-0"

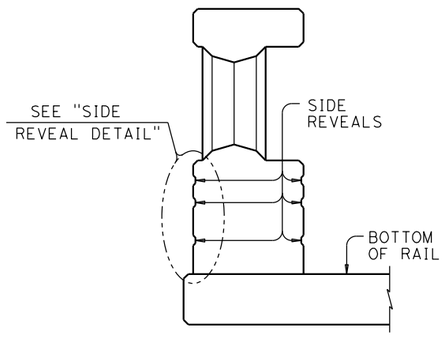

TYPICAL REVEAL LOCATION DETAIL

1" = 1'-0"

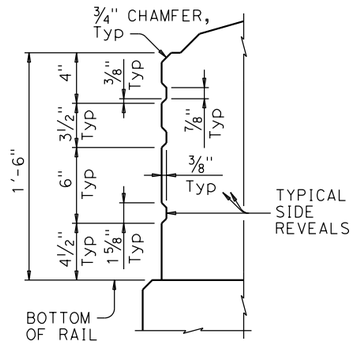

SIDE REVEAL DETAIL

2" = 1'-0"

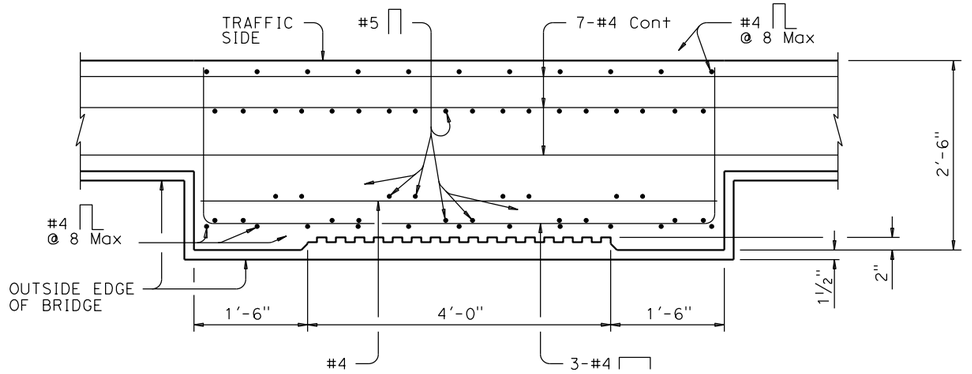

SECTION J-J

1" = 1'-0"

DESIGN OVERSIGHT		DESIGN	BY M. Hancock	CHECKED T. Osterkamp	PREPARED FOR THE STATE OF CALIFORNIA DEPARTMENT OF TRANSPORTATION
SIGN OFF DATE		DETAILS	BY K. Dang	CHECKED	T. Osterkamp PROJECT ENGINEER
DESIGN DETAIL SHEET (ENGLISH) (REV.7/16/10)		QUANTITIES	BY	CHECKED	BRIDGE NO. 18C-0055 POST MILES

2ND STREET UNDERCROSSING
CONCRETE BARRIER TYPE C412 NO. 2

ORIGINAL SCALE IN INCHES FOR REDUCED PLANS 0 1 2 3

UNIT: PROJECT NUMBER & PHASE: CONTRACT NO.:

DISREGARD PRINTS BEARING EARLIER REVISION DATES →

REVISION DATES | SHEET 21 | OF 26

FILE => J:\1858_5th_St_BR\517\2nd BRIDGE\1858BTXRAIL02.dgn

USERNAME => untitled DATE PLOTTED => 8/12/2016 TIME PLOTTED => 10:16:09 AM

DIST	COUNTY	ROUTE	POST MILES TOTAL PROJECT	SHEET No	TOTAL SHEETS
03	Sut/Yub	Local			

REGISTERED CIVIL ENGINEER DATE

REGISTERED PROFESSIONAL ENGINEER — MASON LEE HANCOCK — No. 75048 — Exp. 12-31-17 — CIVIL — STATE OF CALIFORNIA

PLANS APPROVAL DATE

CITY OF YUBA CITY
1201 CIVIC CENTER BOULEVARD
YUBA CITY, CA 95993

Dokken Engineering
110 Blue Ravine Rd, Suite 200
Folsom, CA 95630 (916) 858-0642

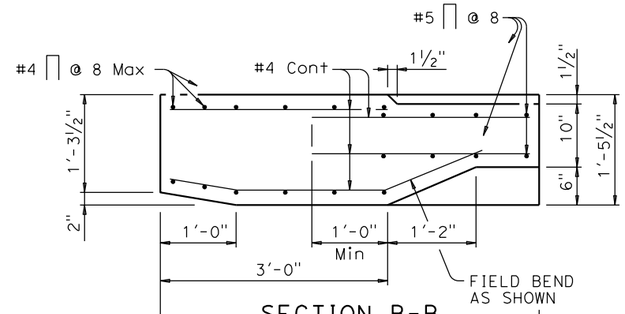

SECTION B-B

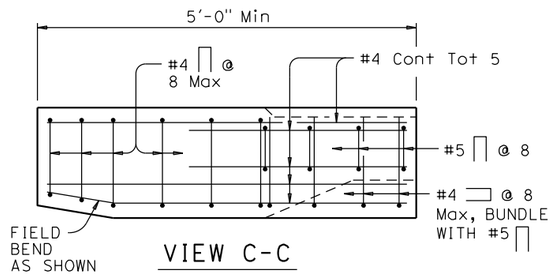

VIEW C-C

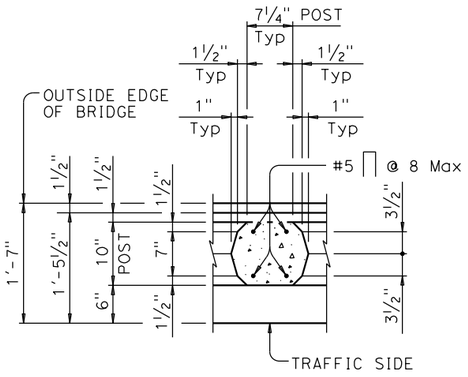

SECTION D-D

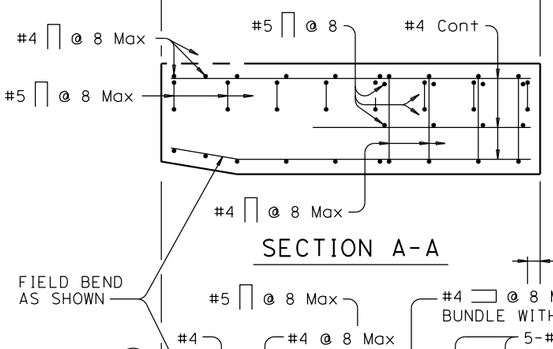

SECTION A-A

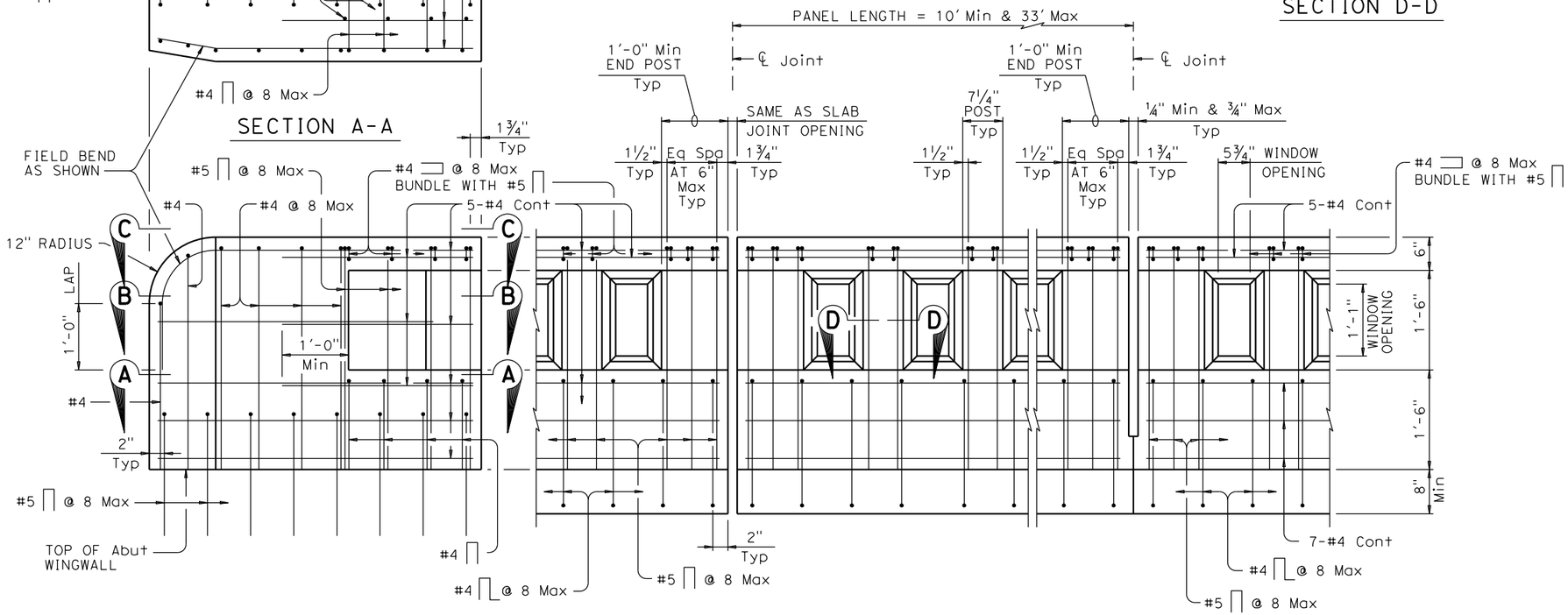

AT END SECTION AT ABUTMENTS AND HINGES AT PIERS

ELEVATION SHOWING TYPICAL REINFORCING PLACEMENT

1" = 1'-0"

DESIGN OVERSIGHT		DESIGN	BY M. Hancock	CHECKED T. Osterkamp	PREPARED FOR THE STATE OF CALIFORNIA DEPARTMENT OF TRANSPORTATION	T. Osterkamp PROJECT ENGINEER	BRIDGE NO. 18C-0055
SIGN OFF DATE		DETAILS	BY K. Dang	CHECKED			POST MILES
		QUANTITIES	BY	CHECKED			

2ND STREET UNDERCROSSING
CONCRETE BARRIER TYPE C412 NO. 3

DESIGN DETAIL SHEET (ENGLISH) (REV.7/16/10)

ORIGINAL SCALE IN INCHES FOR REDUCED PLANS 0 1 2 3

UNIT:
PROJECT NUMBER & PHASE: CONTRACT NO.:

DISREGARD PRINTS BEARING EARLIER REVISION DATES →

REVISION DATES				SHEET	OF
-				22	26

FILE => J:\1858_5th_St_BR\517\2nd BRIDGE\1858BTXRAIL03.dgn

USERNAME => untitled DATE PLOTTED => 8/12/2016 TIME PLOTTED => 10:16:10 AM

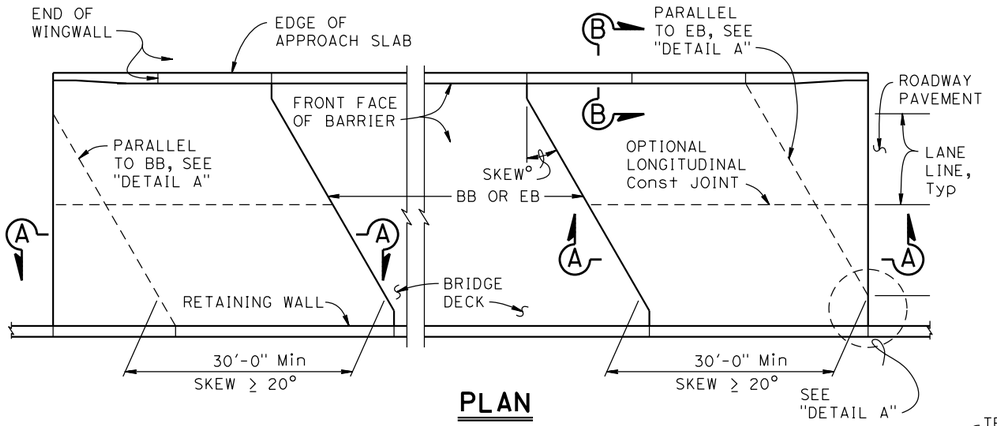

PLAN

1" = 10'

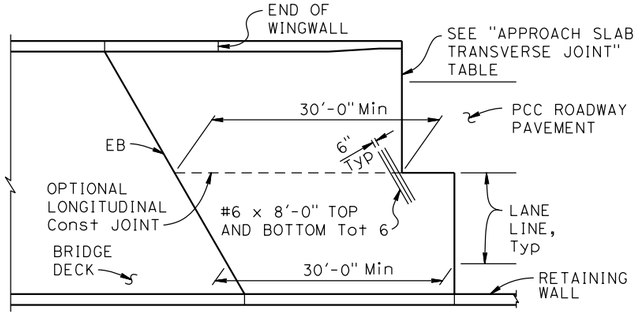

END STAGGER DETAIL

1" = 10'

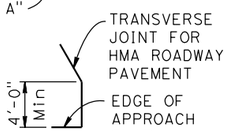

DETAIL A

No Scale

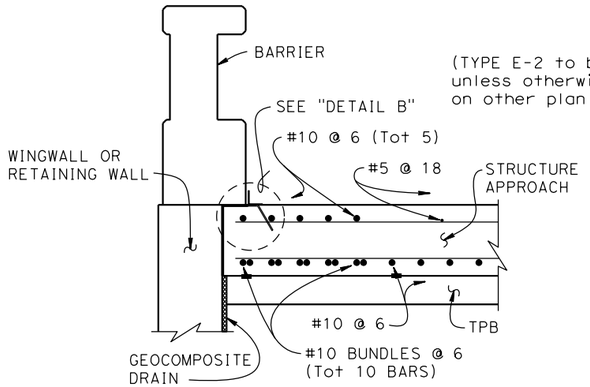

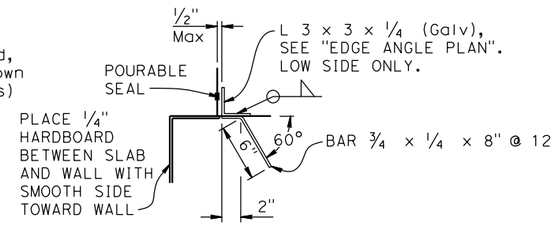

DETAIL B

1½" = 1'-0"

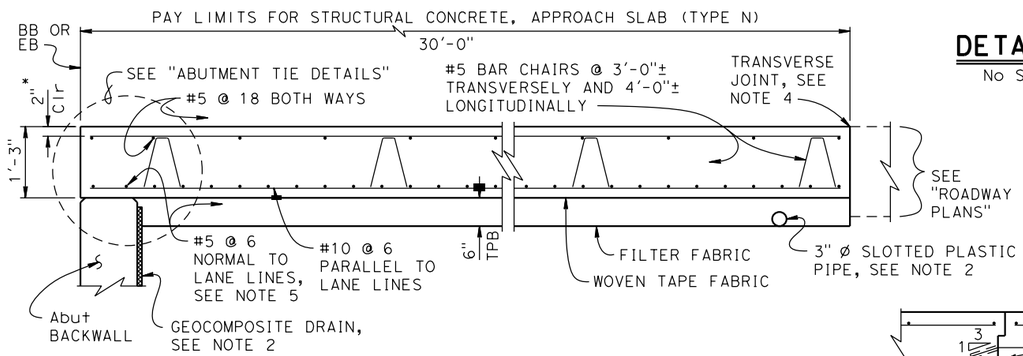

SECTION A-A

¾" = 1'-0"

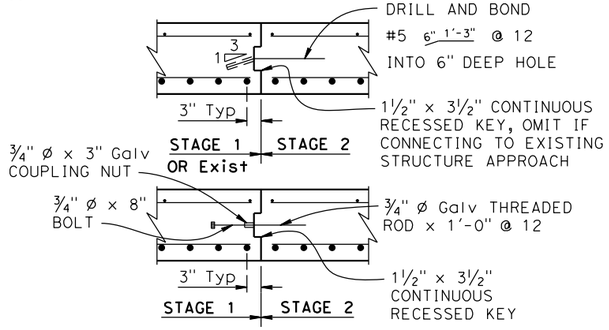

LONGITUDINAL CONSTRUCTION JOINT ALTERNATIVES

¾" = 1'-0"

NOTE B:
Min lap splice for bottom Reinf must be 2'-9" in Freeze-Thaw Area.

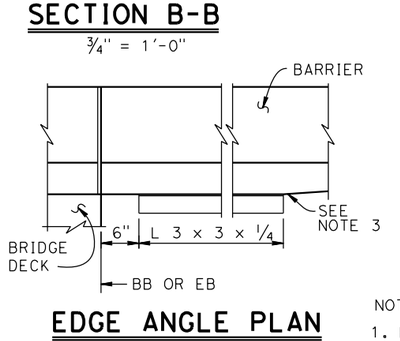

SECTION B-B

¾" = 1'-0"

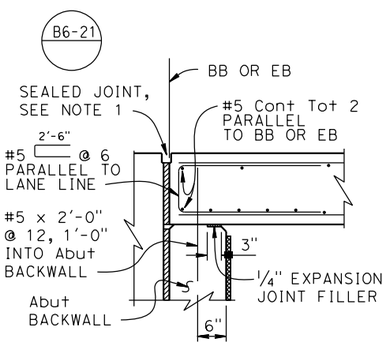

ABUTMENT TIE DETAILS

¾" = 1'-0"

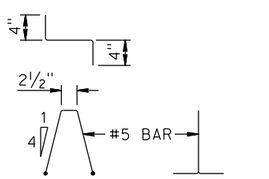

EDGE ANGLE PLAN

1" = 1'-0"

BAR CHAIR DETAIL

1" = 1'-0"

DESIGN NOTES

DESIGN: AASHTO LRFD Bridge Design Specifications, 2012 Edition with Caltrans Amendments, preface dated January 2014

LIMIT STATES: Service I, Strength I & II, Extreme II and Fatigue I (γ_{FAT} = 1.0)

DEAD LOAD: Includes 35 psf for future wearing surface

LIVE LOAD: HL93 and permit design load
Equivalent strip width method: W_1 = 12 ft
Slab span: L_1 = 24.5 ft

REINFORCED CONCRETE:
f_y = 60 ksi
f'_c = 3.6 ksi
n = 8

NOTES:

1. For joint protection details, blockout dimensions for joint seal assembly, and other details not shown, see other plan sheets. For MR ≤ 2", adjust reinforcement to clear sawcut for sealed joint. For MR > 2", haunch reinforcement placed for joint seal assembly blockout must be normal to BB or EB and spaced to avoid joint seal assembly anchorage.
2. For drainage details, see "STRUCTURE APPROACH DRAINAGE DETAILS" sheet.
3. End the plate or edge angle at beginning of barrier transition, end of wingwall, or end of structure approach as applicable.
4. Transverse Joint must be a minimum of 5'-0" from an existing or constructed weakened plane joint in approach PCC roadway pavement. Refer to Standard Plans P10 and P14.
5. At the Contractor's option, approach slab transverse reinforcement may be placed parallel to BB or EB. Spacing of transverse reinforcement is measured along ℄ roadway.

DIST	COUNTY	ROUTE	POST MILES TOTAL PROJECT	SHEET No	TOTAL SHEETS
03	Sut/Yub	Local			

REGISTERED CIVIL ENGINEER DATE

PLANS APPROVAL DATE

REGISTERED PROFESSIONAL ENGINEER — MASON LEE HANCOCK — No. 75048 — Exp. 12-31-17 — CIVIL — STATE OF CALIFORNIA

CITY OF YUBA CITY
1201 CIVIC CENTER BOULEVARD
YUBA CITY, CA 95993

Dokken Engineering
110 Blue Ravine Rd, Suite 200
Folsom, CA 95630 (916) 858-0642

DESIGN OVERSIGHT			
SIGN OFF DATE			
DESIGN	BY M. Hancock	CHECKED T. Osterkamp	PREPARED FOR THE STATE OF CALIFORNIA DEPARTMENT OF TRANSPORTATION
DETAILS	BY K. Dang	CHECKED	
QUANTITIES	BY	CHECKED	

T. Osterkamp
PROJECT ENGINEER

BRIDGE NO. 18C-0055
POST MILES

2ND STREET UNDERCROSSING
STRUCTURE APPROACH TYPE N (30S)

DESIGN DETAIL SHEET (ENGLISH) (REV.7/16/10)

ORIGINAL SCALE IN INCHES FOR REDUCED PLANS 0 1 2 3

UNIT:
PROJECT NUMBER & PHASE:
CONTRACT NO.:

DISREGARD PRINTS BEARING EARLIER REVISION DATES →

REVISION DATES | SHEET 23 | OF 26

FILE => J:\1858_5th_St_BR\517\2nd BRIDGE\1858BSAS.dgn

USERNAME => untitled DATE PLOTTED => 8/12/2016 TIME PLOTTED => 10:16:10 AM

DIST	COUNTY	ROUTE	POST MILES TOTAL PROJECT	SHEET No	TOTAL SHEETS
03	Sut/Yub	Local			

REGISTERED CIVIL ENGINEER _____ DATE _____

PLANS APPROVAL DATE _____

REGISTERED PROFESSIONAL ENGINEER — MASON LEE HANCOCK — No. 75048 — Exp. 12-31-17 — CIVIL — STATE OF CALIFORNIA

CITY OF YUBA CITY
1201 CIVIC CENTER BOULEVARD
YUBA CITY, CA 95993

Dokken Engineering
110 Blue Ravine Rd, Suite 200
Folsom, CA 95630 (916) 858-0642

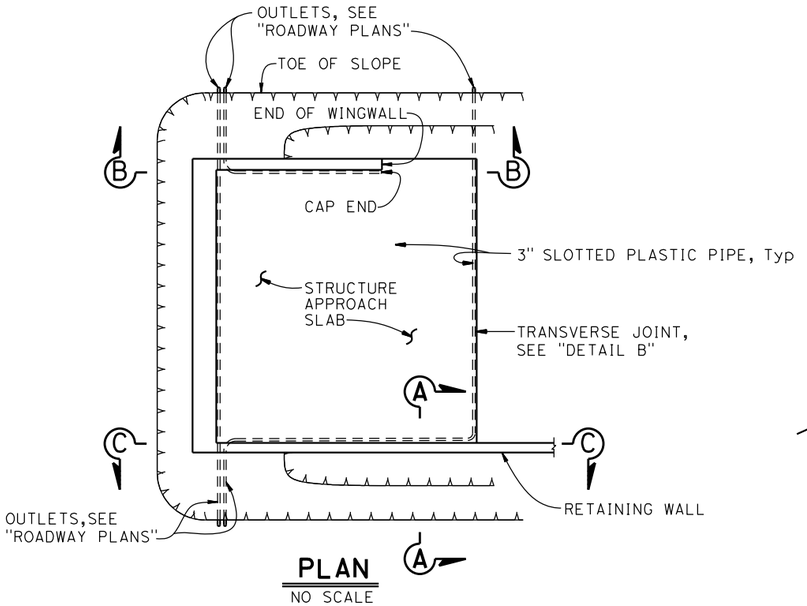

PLAN
NO SCALE

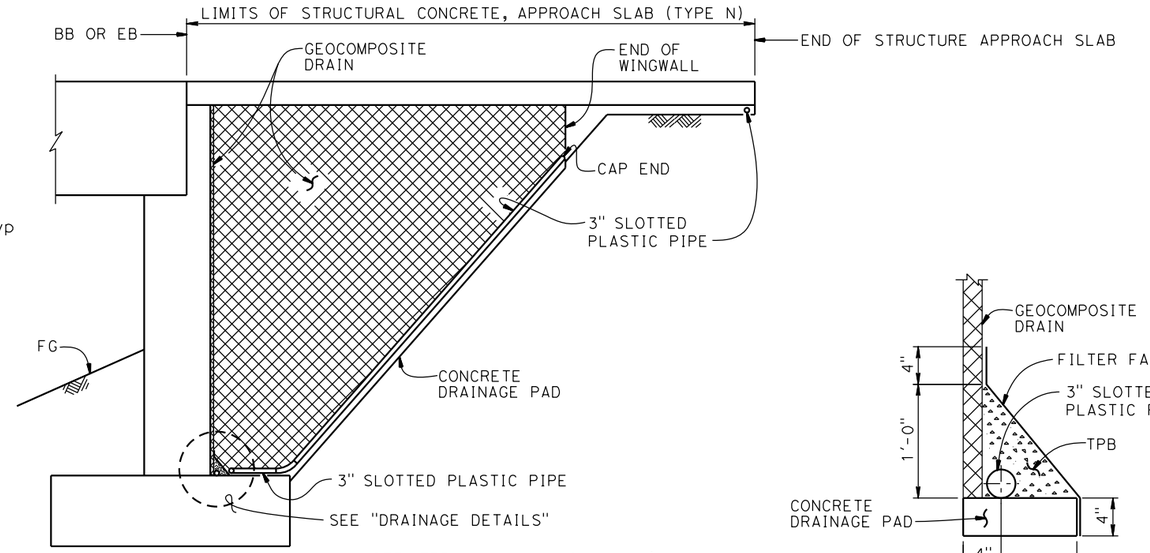

NOTE: TPB not shown for clarity.

SECTION B-B
NO SCALE

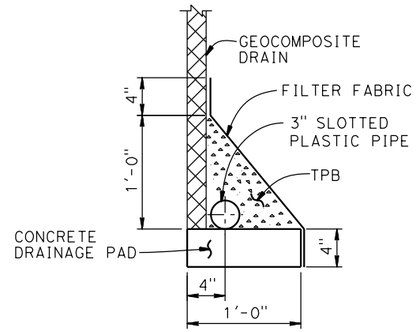

DRAINAGE PAD

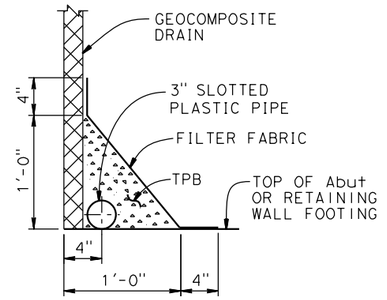

FOOTING

DRAINAGE DETAILS
1½" = 1'-0"

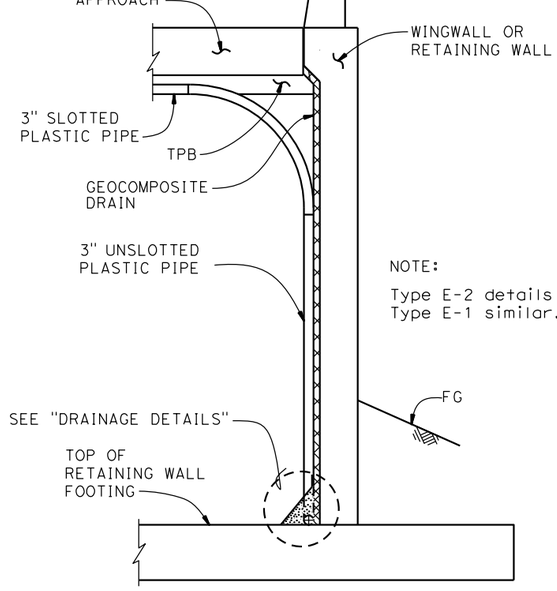

SECTION A-A
NO SCALE

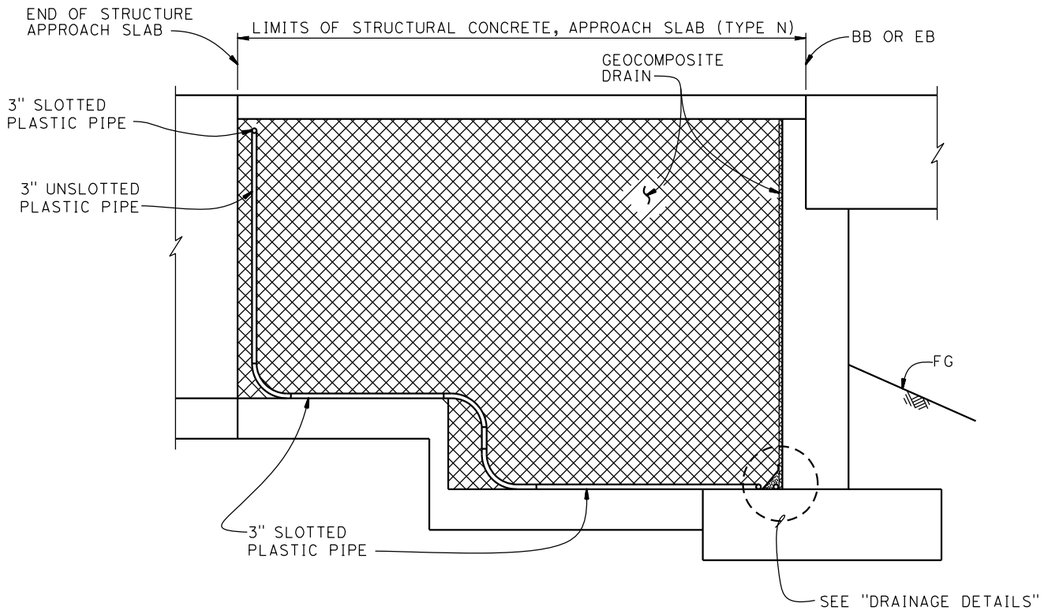

SECTION C-C
NO SCALE

NOTE: TPB not shown for clarity.

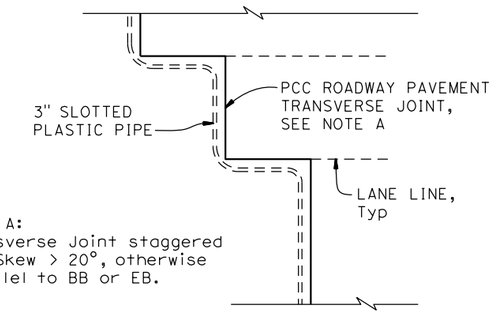

NOTE A:
Transverse Joint staggered for Skew > 20°, otherwise parallel to BB or EB.

DETAIL B
NO SCALE

NOTES:

1. For structural approach and other details not shown, see other plan sheets.
2. All bends in plastic pipe must have 3'-0" minimum radius. Plastic pipe used for bends is not required to be slotted.

DESIGN OVERSIGHT		DESIGN	BY M. Hancock	CHECKED T. Osterkamp	PREPARED FOR THE STATE OF CALIFORNIA DEPARTMENT OF TRANSPORTATION
SIGN OFF DATE		DETAILS	BY K. Dang	CHECKED	
		QUANTITIES	BY	CHECKED	

T. Osterkamp
PROJECT ENGINEER

BRIDGE NO. 18C-0055
POST MILES

2ND STREET UNDERCROSSING
STRUCTURE APPROACH DRAINAGE DETAILS

DESIGN DETAIL SHEET (ENGLISH) (REV.7/16/10)

ORIGINAL SCALE IN INCHES FOR REDUCED PLANS 0 1 2 3

UNIT:
PROJECT NUMBER & PHASE:
CONTRACT NO.:

DISREGARD PRINTS BEARING EARLIER REVISION DATES →

REVISION DATES					SHEET	OF
-					24	26

FILE => J:\1858_5th_St_BR\517\2nd BRIDGE\1858BSAD.dgn

USERNAME => untitled DATE PLOTTED => 8/12/2016 TIME PLOTTED => 10:16:11 AM

DIST	COUNTY	ROUTE	POST MILES TOTAL PROJECT	SHEET No	TOTAL SHEETS
03	Sut/Yub	Local			

REGISTERED CIVIL ENGINEER DATE

PLANS APPROVAL DATE

REGISTERED PROFESSIONAL ENGINEER — MASON LEE HANCOCK — No. 75048 — Exp. 12-31-17 — CIVIL — STATE OF CALIFORNIA

CITY OF YUBA CITY
1201 CIVIC CENTER BOULEVARD
YUBA CITY, CA 95993

Dokken Engineering
110 Blue Ravine Rd, Suite 200
Folsom, CA 95630 (916) 858-0642

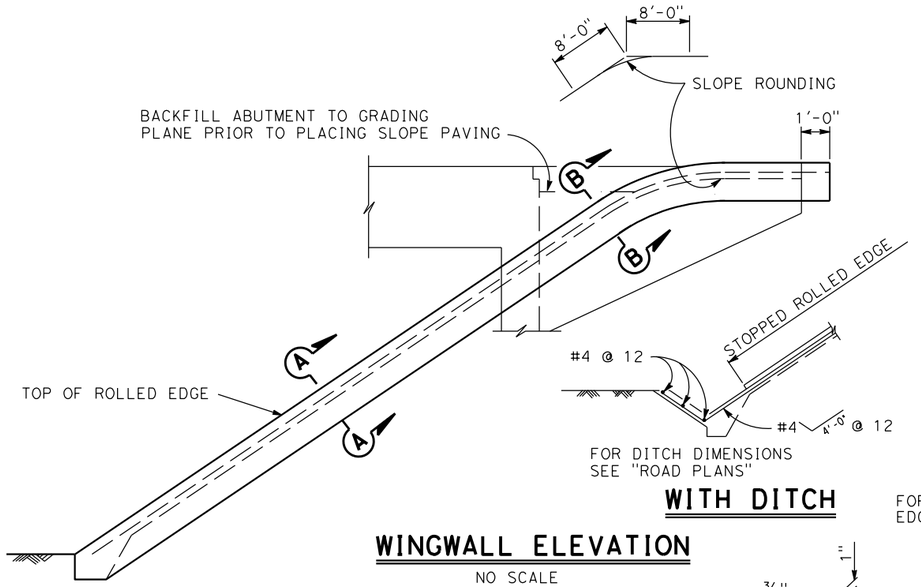

WITH DITCH

WINGWALL ELEVATION

NO SCALE

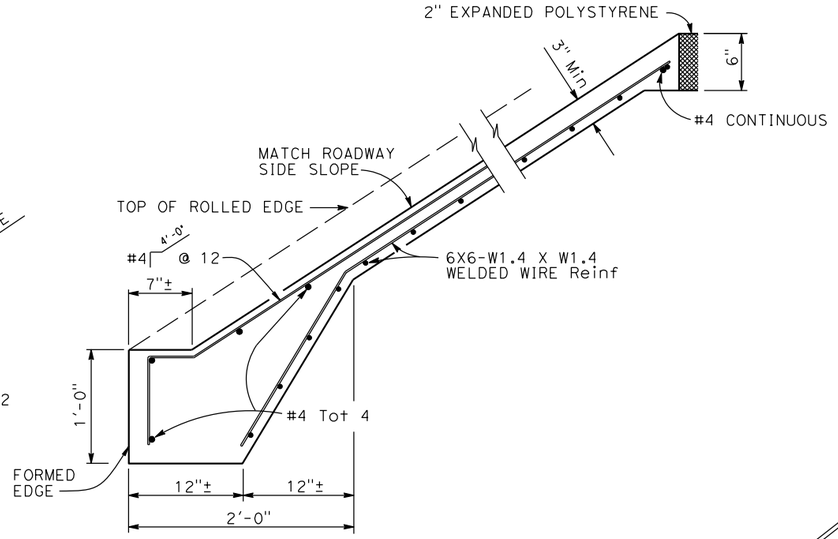

TYPICAL SECTION - CONCRETE PAVING

NO SCALE

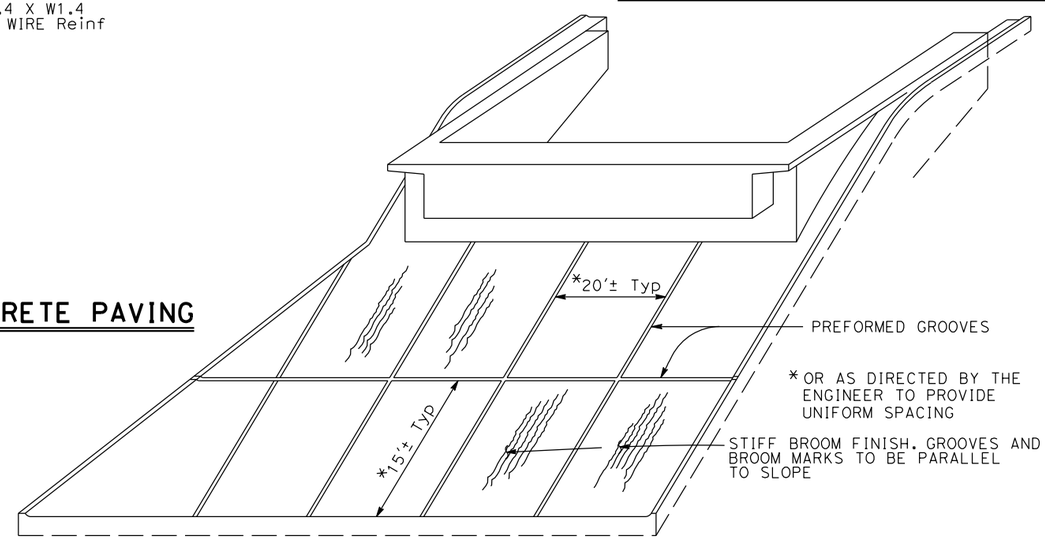

PICTORIAL VIEW OF TYPICAL INSTALLATION

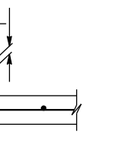

PREFORMED GROOVE

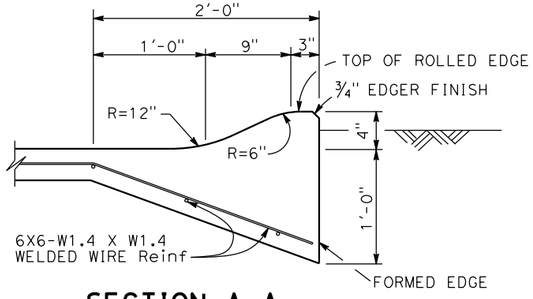

SECTION A-A

NO SCALE

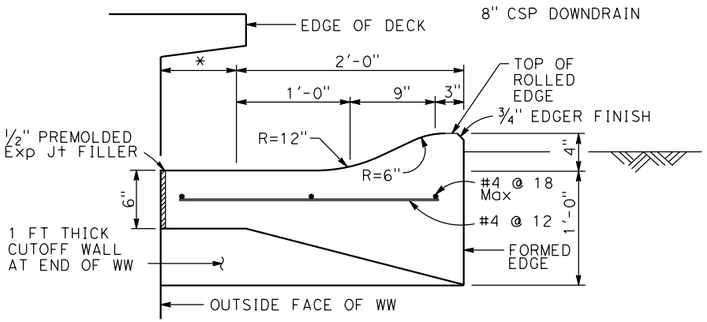

SECTION B-B

NO SCALE

* THIS DIMENSION BECOMES ZERO WHEN EDGE OF DECK IS AT OUTSIDE FACE OF WW

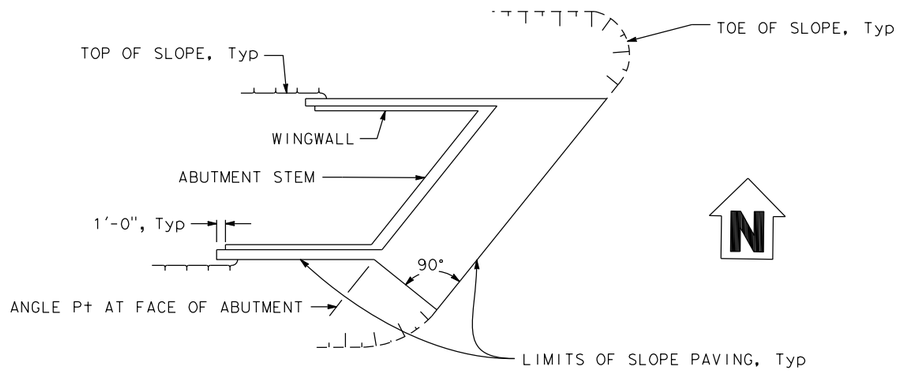

ABUTMENT 1

LIMITS OF SLOPE PAVING

NO SCALE

DESIGN OVERSIGHT		DESIGN	BY M. Hancock	CHECKED T. Osterkamp	PREPARED FOR THE STATE OF CALIFORNIA DEPARTMENT OF TRANSPORTATION	T. Osterkamp PROJECT ENGINEER	BRIDGE NO. 18C-0055
SIGN OFF DATE		DETAILS	BY K. Dang	CHECKED			POST MILES
		QUANTITIES	BY	CHECKED			

2ND STREET UNDERCROSSING
SLOPE PAVING-FULL SLOPE

DESIGN DETAIL SHEET (ENGLISH) (REV.7/16/10)

ORIGINAL SCALE IN INCHES FOR REDUCED PLANS 0 1 2 3

UNIT: PROJECT NUMBER & PHASE: CONTRACT NO.:

DISREGARD PRINTS BEARING EARLIER REVISION DATES →

REVISION DATES: -

SHEET 25 OF 26

FILE => J:\1858_5th_St_BR\517\2nd BRIDGE\1858BSLOPE.dgn

USERNAME => untitled DATE PLOTTED => 8/12/2016 TIME PLOTTED => 10:16:11 AM

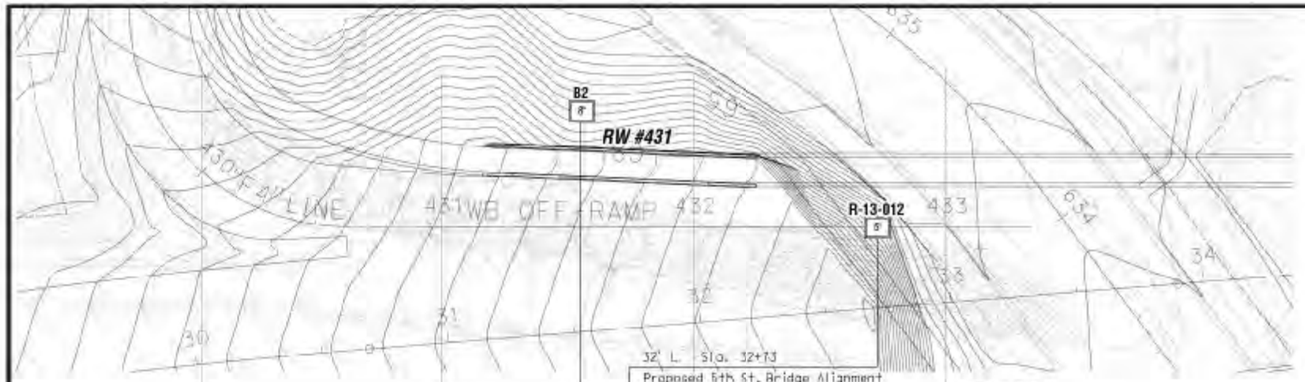

PLAN
1" = 30'

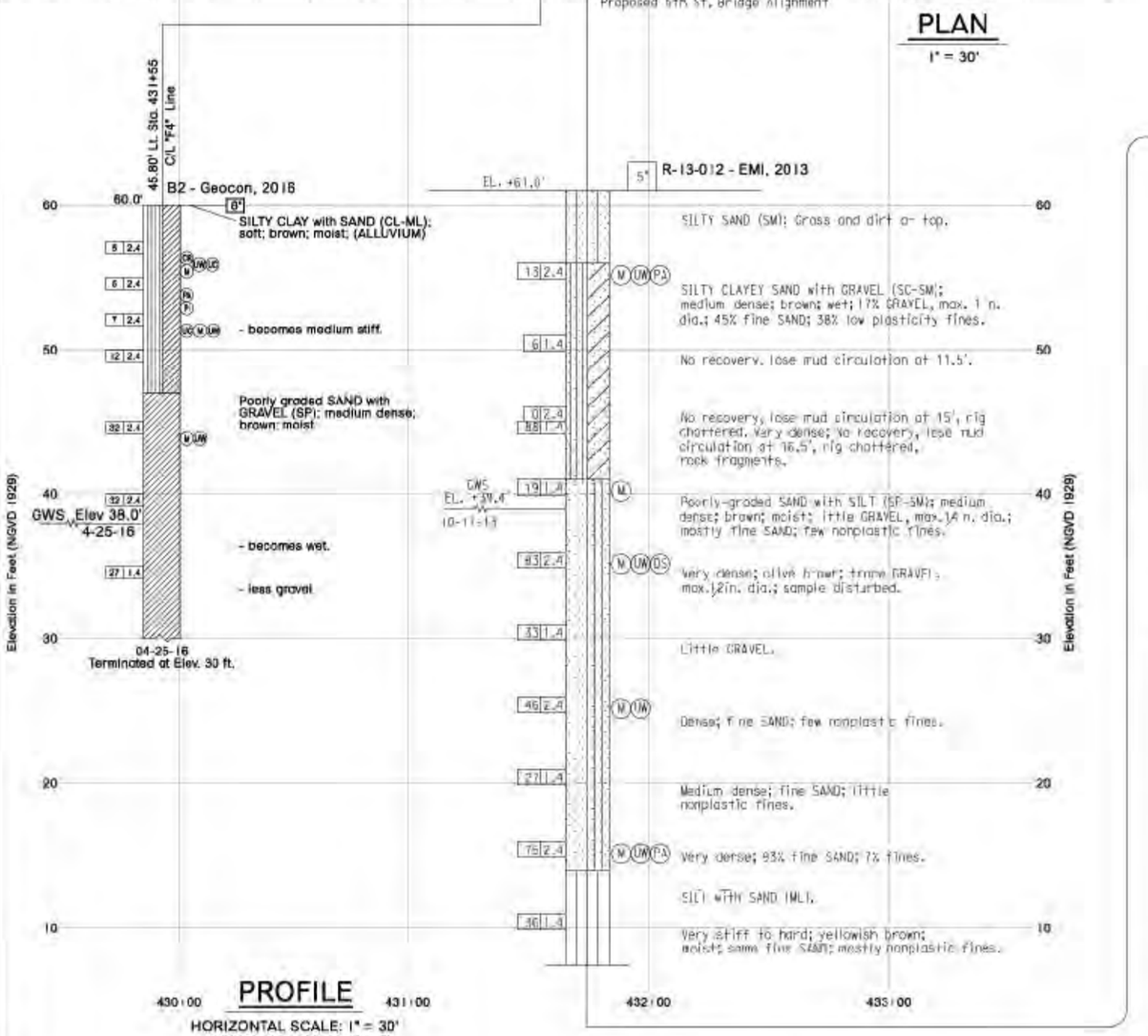

PROFILE
HORIZONTAL SCALE: 1" = 30'
VERTICAL SCALE: 1" = 5'

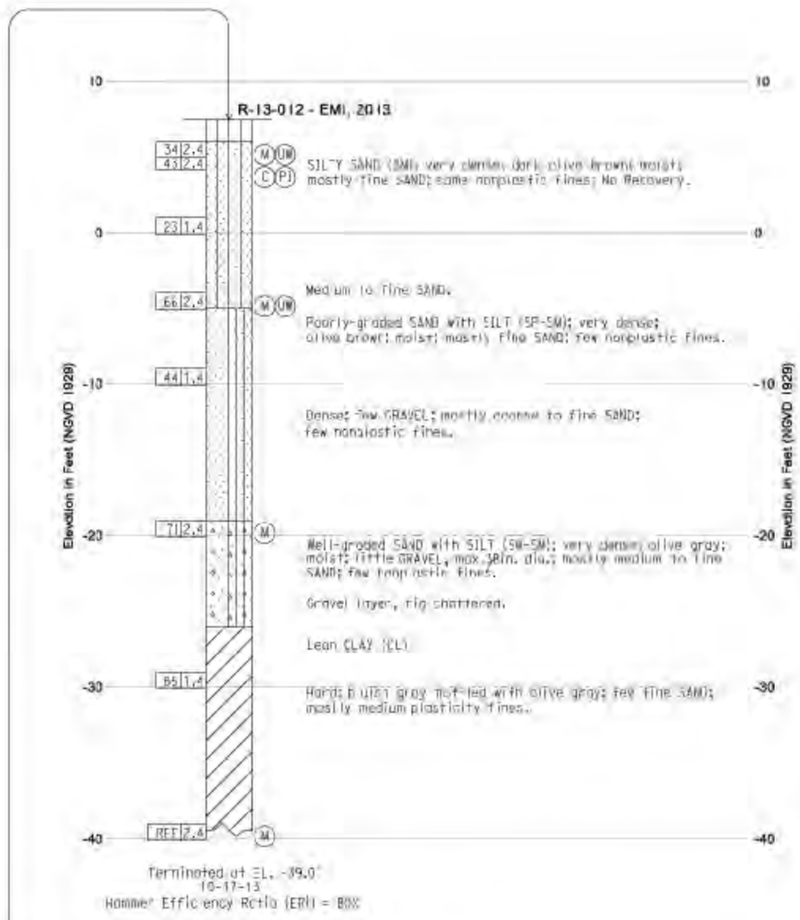

DIST	COUNTY	ROUTE	POST MILES TOTAL PROJECT	SHEET NO.	TOTAL SHEETS
08	SBD			3	5

REGISTERED PROFESSIONAL ENGINEER

JEREMY JACOB ZORNE No. GE2836 GEOTECHNICAL

PLANS APPROVAL DATE

The State of California or its officers or agents shall not be responsible for the accuracy or completeness of electronic copies of this plan sheet.

GEOCON CONSULTANTS, INC
6960 GOLD VALLEY DR - SUITE 100 - RANCHO CORDOVA, CA 95742
PHONE: 916.852.9118 - FAX: 916.852.9132

Geocon Project No. S9853-05-03

This LOTB sheet was prepared in accordance with the Caltrans Soil & Rock Logging, Classification, and Presentation Manual (2010).

BENCH MARK

DESCRIPTION

Set Bernsen Spike V205 located at N2027792.378 E6896099.564, elevation 1,816.42 feet, NGVD 1929, per sheet SC-1 of undated "Survey Control" 65% plan provided by Dokken Engineering.

NOTES

1. The consistency/apparent density descriptions are from Figures 2-9 and 2-10 of the Caltrans "Soil and Rock Logging, Classification, and Presentation Manual". These descriptors are based upon the Standard Penetration Test (ASTM D 1586)(uncorrected for Hammer Energy Ratio and the Modified California sampling method (ASTM D 3550). The descriptors based on the Mod Cal method have been modified by the utilization of the Burmister's (1948) input energy correction equation and NAVFAC DM 7.1.

2. Relatively undisturbed soil samples were obtained by driving a 3-inch outside diameter, with a 2.5-inch inside diameter (California Modified) split-spoon sampler for Modified California Sampling Methods and a 2-inch outside diameter split-spoon sampler for Standard Penetration Test Sampling Methods.

3. The boring logs and related information represent the opinion of the professional engineer as to the character of the material at the locations shown. Soil and groundwater conditions between adjacent test holes and at other locations may differ from those shown. Groundwater conditions may change with passage of time.

4. Test boring elevations are approximate based on topographic base sheet mapping prepared for this project.

5. Test boring locations were determined in the field based on staking and pacing from mapped site features. The locations of the explorations should be considered accurate only to the degree implied by the measuring methods used.

6. A downhole 140-pound automatic hammer falling 30 inches was used to drive samplers.

7. Visual classification of earth materials was based on field inspection and was confirmed or revised with laboratory test results.

ENGINEERING SERVICES		GEOTECHNICAL SERVICES	PREPARED FOR THE STATE OF CALIFORNIA DEPARTMENT OF TRANSPORTATION	DIVISION OF ENGINEERING SERVICES STRUCTURE DESIGN	BRIDGE NO.	2ND STREET UNDERCROSSING
FUNCTIONAL SUPERVISOR	DRAWN BY: D. HANSEN	FIELD INVESTIGATION BY: B. PEREZ		DESIGN BRANCH	POST MILES	LOG OF TEST BORINGS
NAME	CHECKED BY: J. ZORNE					
205 CIVIL LOG OF TEST BORINGS SHEET	ORIGINAL SCALE IN INCHES FOR REDUCED PLANS: 0 1 2 3		CU EA	D/STANDARD PRINTS BEARING EARLIER REVISION DATES →	REVISION DATES	SHEET 26 OF 26

DIST	COUNTY	ROUTE	POST MILES TOTAL PROJECT	SHEET No	TOTAL SHEETS
03	Sut/Yub	Local			

REGISTERED CIVIL ENGINEER DATE

PLANS APPROVAL DATE

REGISTERED PROFESSIONAL ENGINEER — ROSA GRIGGS — No. 54169 — Exp. 12-31-17 — CIVIL — STATE OF CALIFORNIA

CITY OF YUBA CITY
1201 CIVIC CENTER BOULEVARD
YUBA CITY, CA 95993

Dokken Engineering
110 Blue Ravine Rd, Suite 200
Folsom, CA 95630 (916) 858-0642

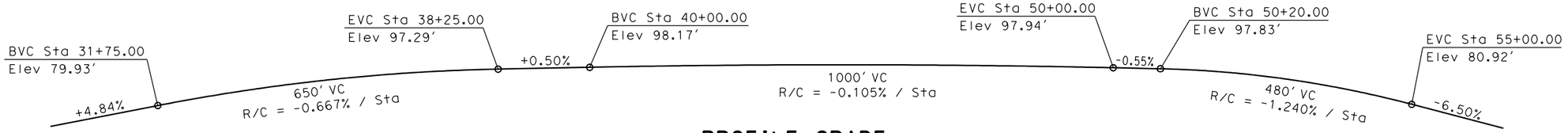

PROFILE GRADE

No Scale

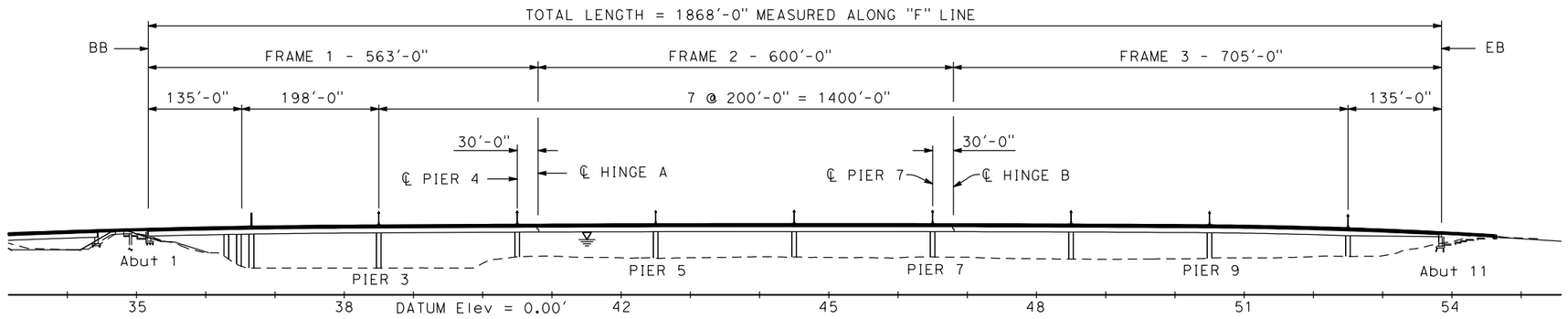

DEVELOPED ELEVATION

1" = 100'

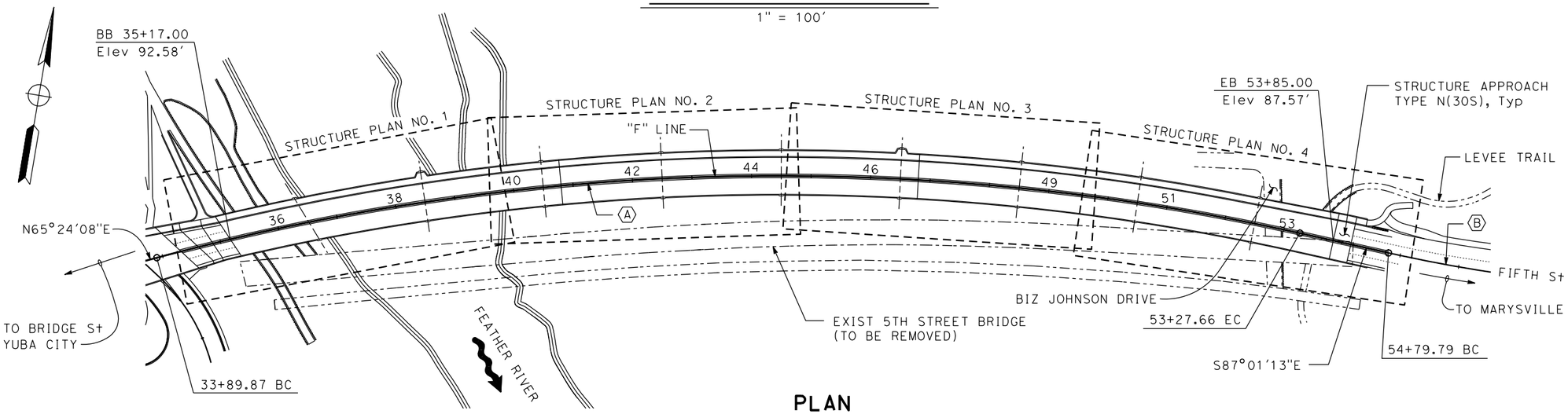

PLAN

1" = 100'

100 yr WSE = 76.3
200 yr WSE = 79.6

CURVE DATA

Ⓐ	Ⓑ
R = 4026.00'	R = 2673.64'
△ = 27°34'39"	△ = 9°06'01"
T = 988.04'	T = 212.78'
L = 1937.79'	L = 424.66'

NOTES:

1. All Elevations are NAVD 88.
2. Typical Sections on separate sheets.

DESIGN OVERSIGHT	DESIGN	BY R. Griggs	CHECKED T. Osterkamp	LOAD & RESISTANCE FACTOR DESIGN	LIVE LOADING: HL93 W/"LOW-BOY"; PERMIT DESIGN VEHICLE	PREPARED FOR THE CITY OF YUBA CITY DEPARTMENT OF PUBLIC WORKS	T. Osterkamp PROJECT ENGINEER
SIGN OFF DATE	DETAILS	BY K. Dang	CHECKED	LAYOUT	BY / CHECKED		BRIDGE NO. 18C0012
	QUANTITIES	BY	CHECKED	SPECIFICATIONS	BY / PLANS AND SPECS COMPARED		POST MILES

5TH STREET BRIDGE OVER FEATHER RIVER
GENERAL PLAN

DESIGN GENERAL PLAN SHEET (ENGLISH) (REV.7/16/10)

ORIGINAL SCALE IN INCHES FOR REDUCED PLANS 0 1 2 3

UNIT: - PROJECT NUMBER & PHASE: - CONTRACT NO.: X

DISREGARD PRINTS BEARING EARLIER REVISION DATES →

REVISION DATES					SHEET	OF
X					1	61

FILE => J:\1858_5th_St_BR\517\5th BRIDGE\1858GP1.dgn

USERNAME => unfitted DATE PLOTTED => 8/12/2016 TIME PLOTTED => 10:49:54 AM

INDEX TO PLANS

Sheet No.	Title
1	GENERAL PLAN
2	INDEX TO PLANS
3	STRUCTURE PLAN NO. 1
4	STRUCTURE PLAN NO. 2
5	STRUCTURE PLAN NO. 3
6	STRUCTURE PLAN NO. 4
7	STRUCTURE PLAN NO. 5
8	STRUCTURE PLAN NO. 6
9	DECK CONTOURS NO. 1
10	DECK CONTOURS NO. 2
11	DECK CONTOURS NO. 3
12	DECK CONTOURS NO. 4
13	FOUNDATION PLAN NO. 1
14	FOUNDATION PLAN NO. 2
15	FOUNDATION PLAN NO. 3
16	FOUNDATION PLAN NO. 4
17	FOUNDATION PLAN NO. 5
18	ABUTMENT 1 LAYOUT
19	ABUTMENT 11 LAYOUT
20	ABUTMENTS PILE LAYOUT
21	ABUTMENT DETAILS NO. 1
22	RETAINING WALL NO. 35E LAYOUT
23	RETAINING WALL NO. 35E DETAILS NO. 1
24	RETAINING WALL NO. 35E DETAILS NO. 2
25	RETAINING WALL NO. 35S
26	RETAINING WALL NO. 54N
27	RETAINING WALL NO. 54S
28	FLOOD WALL DETAILS
29	STRIP JOINT SEAL ASSEMBLY MAXIMUM MOVEMENT RATING = 4"
30	PIER LAYOUT - FRAME 1 & FRAME 2
31	PIER LAYOUT - FRAME 3
32	PIER DETAILS NO. 1
33	PIER DETAILS NO. 2
34	TYPICAL SECTION NO. 1
35	TYPICAL SECTION NO. 2
36	GIRDER LAYOUT NO. 1
37	GIRDER LAYOUT NO. 2
38	GIRDER LAYOUT NO. 3
39	GIRDER LAYOUT NO. 4
40	GIRDER DETAILS NO. 1
41	GIRDER DETAILS NO. 2
42	CLOSURE POUR DETAILS
43	GIRDER REINFORCEMENT
44	HINGE DETAILS NO. 1
45	HINGE DETAILS NO. 2
46	HINGE DETAILS NO. 3
47	HINGE DETAILS NO. 4
48	HINGE DETAILS NO. 5
49	CABLE RESTRAINER DETAILS
50	JOINT SEAL - HINGE DETAILS MOVEMENT RATING GREATER THAN 4"
51	PTFE/ELASTOMERIC EXPANSION BEARING DETAILS
52	OVERLOOK DETAILS
53	DECK DRAIN LAYOUT NO. 1
54	DECK DRAIN LAYOUT NO. 2
55	CONCRETE BARRIER TYPE C412 NO. 1
56	CONCRETE BARRIER TYPE C412 NO. 2
57	CONCRETE BARRIER TYPE C412 NO. 3
58	UTILITY DETAILS
59	STRUCTURE APPROACH TYPE N(30S)
60	STRUCTURE APPROACH DRAINAGE DETAILS
61	LOG OF TEST BORINGS

GENERAL NOTES
LOAD AND RESISTANCE FACTOR DESIGN

DESIGN: AASHTO LRFD Bridge Design Specifications, 6th Edition with California Amendments, preface dated January 2014

SEISMIC DESIGN: CALTRANS SEISMIC DESIGN CRITERIA (SDC) Version 1.7, April 2013

DEAD LOAD: Includes 0.035 ksf for future wearing surface

LIVE LOAD: HL-93, Caltrans' "Low Boy" and CA P-15 Permit, design vehicular loads.

SEISMIC LOAD: Soil profile : V_{S30} = 755 ft/s
Moment Magnitude : 6.9
Peak Rock Acceleration = 0.71g

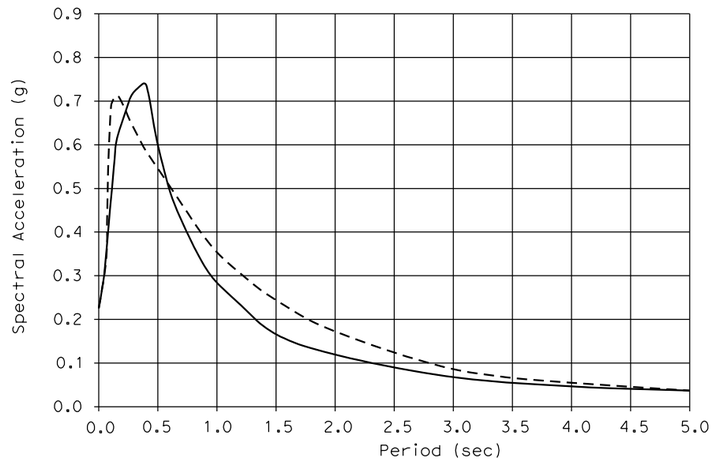

LEGEND

- - - - - POST-LIQUEFACTION

——— PRE-LIQUEFACTION

REINFORCED CONCRETE: f_y = 60 ksi
f'_c = 3.6 ksi
n = 8

PRESTRESSED CONCRETE: See "Prestressing Notes" on "Girder Details No. 1" sheet.

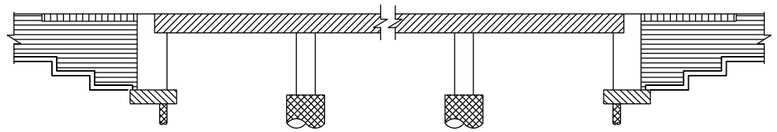

- STRUCTURAL CONCRETE, BRIDGE f'_c = 4 KSI @ 28 DAYS
- STRUCTURAL CONCRETE, APPROACH SLAB
- STRUCTURAL CONCRETE, RETAINING WALL
- STRUCTURAL CONCRETE, BRIDGE FOOTING
- STRUCTURAL CONCRETE BRIDGE, SEE "GIRDER DETAILS NO. 1" SHEET
- CAST-IN-DRILLED-HOLE CONCRETE PILE f'_c = 3.6 KSI

CONCRETE STRENGTH AND TYPE LIMITS

NO SCALE

DIST	COUNTY	ROUTE	POST MILES TOTAL PROJECT	SHEET No	TOTAL SHEETS
03	Sut/Yub	Local			

REGISTERED CIVIL ENGINEER DATE

PLANS APPROVAL DATE

REGISTERED PROFESSIONAL ENGINEER — ROSA GRIGGS — No. 54169 — Exp. 12-31-17 — CIVIL — STATE OF CALIFORNIA

CITY OF YUBA CITY
1201 CIVIC CENTER BOULEVARD
YUBA CITY, CA 95993

Dokken Engineering
110 Blue Ravine Rd, Suite 200
Folsom, CA 95630 (916) 858-0642

STANDARD PLANS DATED 2015

Sheet No.	Title
A3A	ABBREVIATIONS (SHEET 1 OF 3)
A3B	ABBREVIATIONS (SHEET 2 OF 3)
A3C	ABBREVIATIONS (SHEET 3 OF 3)
A10A	LEGEND - LINES AND SYMBOLS (SHEET 1 OF 5)
A10B	LEGEND - LINES AND SYMBOLS (SHEET 2 OF 5)
A10C	LEGEND - LINES AND SYMBOLS (SHEET 3 OF 5)
A10D	LEGEND - LINES AND SYMBOLS (SHEET 4 OF 5)
A10E	LEGEND - LINES AND SYMBOLS (SHEET 5 OF 5)
A10F	LEGEND - SOIL (SHEET 1 OF 2)
A10G	LEGEND - SOIL (SHEET 2 OF 2)
A10H	LEGEND - ROCK
A62C	LIMITS OF PAYMENT FOR EXCAVATION AND BACKFILL BRIDGE
A76A	CONCRETE BARRIER TYPE 60
B0-1	BRIDGE DETAILS
B0-3	BRIDGE DETAILS
B0-5	BRIDGE DETAILS
B0-13	BRIDGE DETAILS
B2-5	PILE DETAILS - CLASS 90 AND CLASS 140
B2-8	PILE DETAILS - CLASS 200
B3-1A	RETAINING WALL TYPE 1 (CASE 1)
B3-5	RETAINING WALL DETAILS No. 1
B7-1	BOX GIRDER DETAILS
B7-6	DECK DRAINS TYPES D-1 AND D-2
B7-8	DECK DRAINAGE DETAILS
B7-10	UTILITY OPENING - BOX GIRDER
B11-51	TUBULAR HAND RAILING
B11-57	CONCRETE BARRIER TYPE 742

STANDARD PLAN SHEET No.

DETAIL No.

DESIGN OVERSIGHT

SIGN OFF DATE

	BY	CHECKED
DESIGN	R. Griggs	T. Osterkamp
DETAILS	K. Dang	CHECKED
QUANTITIES	BY	CHECKED

PREPARED FOR THE STATE OF CALIFORNIA DEPARTMENT OF TRANSPORTATION

T. Osterkamp
PROJECT ENGINEER

BRIDGE NO. 18C-0012
POST MILES

5TH STREET BRIDGE OVER FEATHER RIVER
INDEX TO PLANS

DESIGN DETAIL SHEET (ENGLISH) (REV.7/16/10)

ORIGINAL SCALE IN INCHES FOR REDUCED PLANS 0 1 2 3

UNIT:
PROJECT NUMBER & PHASE: CONTRACT NO.:

DISREGARD PRINTS BEARING EARLIER REVISION DATES →

REVISION DATES | SHEET 2 | OF 61

FILE => J:\1858_5th_St_BR\517\5th BRIDGE\1858INDX.dgn

USERNAME => unfitted DATE PLOTTED => 8/12/2016 TIME PLOTTED => 10:55:02 AM

DIST	COUNTY	ROUTE	POST MILES TOTAL PROJECT	SHEET No	TOTAL SHEETS
03	Sut/Yub	Local			

REGISTERED CIVIL ENGINEER DATE

PLANS APPROVAL DATE

REGISTERED PROFESSIONAL ENGINEER
ROSA GRIGGS
No. 54169
Exp. 12-31-17
CIVIL
STATE OF CALIFORNIA

CITY OF YUBA CITY
1201 CIVIC CENTER BOULEVARD
YUBA CITY, CA 95993

Dokken Engineering
110 Blue Ravine Rd, Suite 200
Folsom, CA 95630 (916) 858-0642

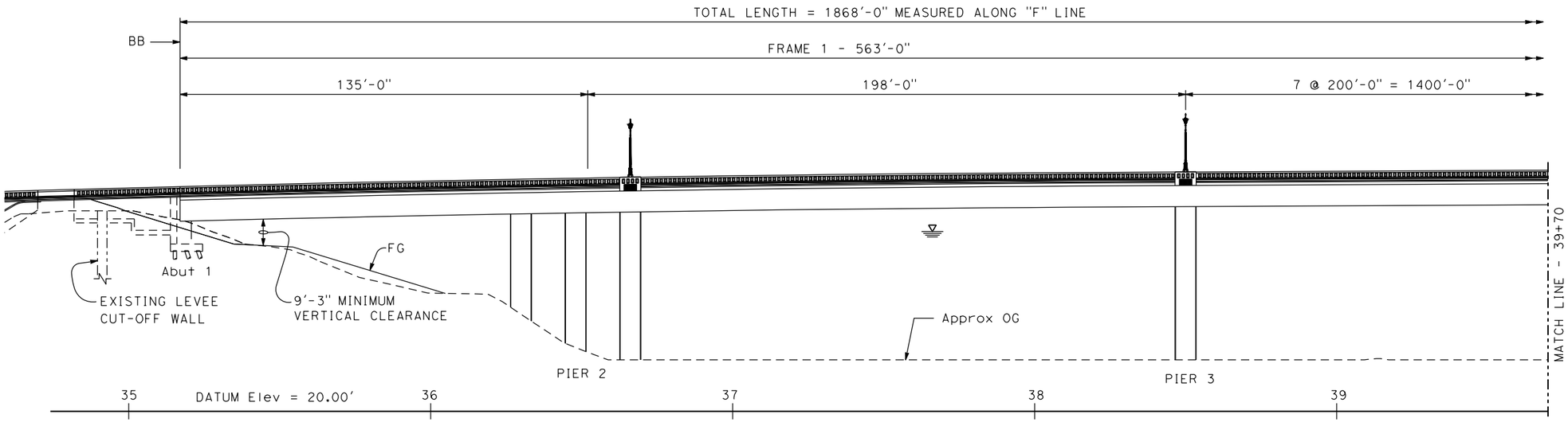

DEVELOPED ELEVATION

1" = 20'

LEGEND

1. Paint "Bridge No. 18C-0012"
2. Paint "Fifth Street Bridge"
3. Paint Bent No.

Point of minimum vertical clearance

200 yr WSE = 79.6. For "HYDROLOGIC SUMMARY", see "FOUNDATION PLAN NO. 5" sheet

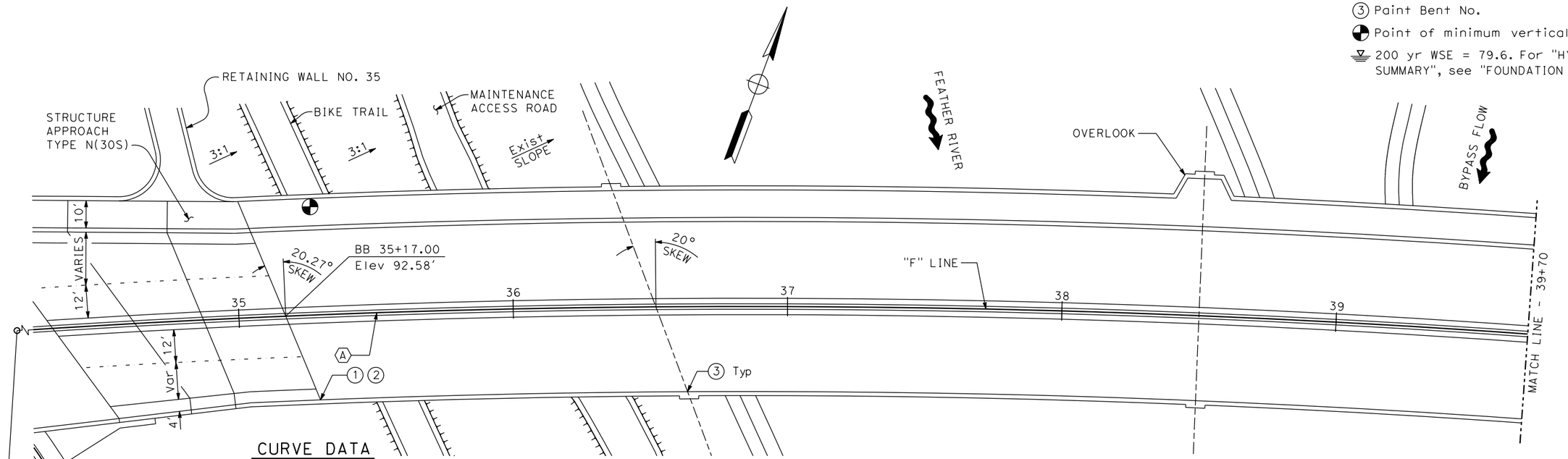

CURVE DATA

Ⓐ

R = 4026.00'
△ = 27°34'39"
T = 988.04'
L = 1937.79'

PLAN

1" = 20'

DESIGN OVERSIGHT		DESIGN	BY R. Griggs	CHECKED T. Osterkamp	PREPARED FOR THE STATE OF CALIFORNIA DEPARTMENT OF TRANSPORTATION	T. Osterkamp PROJECT ENGINEER	BRIDGE NO. 18C-0012
SIGN OFF DATE		DETAILS	BY K. Dang	CHECKED			POST MILES
		QUANTITIES	BY	CHECKED			

5TH STREET BRIDGE OVER FEATHER RIVER
STRUCTURE PLAN NO. 1

DESIGN DETAIL SHEET (ENGLISH) (REV.7/16/10)

ORIGINAL SCALE IN INCHES FOR REDUCED PLANS 0 1 2 3

UNIT: PROJECT NUMBER & PHASE: CONTRACT NO.:

DISREGARD PRINTS BEARING EARLIER REVISION DATES →

REVISION DATES					SHEET	OF
-					3	61

FILE => J:\1858_5th_St_BR\517\5th BRIDGE\1858SP01.dgn

USERNAME => untitled DATE PLOTTED => 8/12/2016 TIME PLOTTED => 10:49:56 AM

DIST	COUNTY	ROUTE	POST MILES TOTAL PROJECT	SHEET No	TOTAL SHEETS
03	Sut/Yub	Local			

REGISTERED CIVIL ENGINEER DATE

PLANS APPROVAL DATE

REGISTERED PROFESSIONAL ENGINEER
ROSA GRIGGS
No. 54169
Exp. 12-31-17
CIVIL
STATE OF CALIFORNIA

CITY OF YUBA CITY
1201 CIVIC CENTER BOULEVARD
YUBA CITY, CA 95993

Dokken Engineering
110 Blue Ravine Rd, Suite 200
Folsom, CA 95630 (916) 858-0642

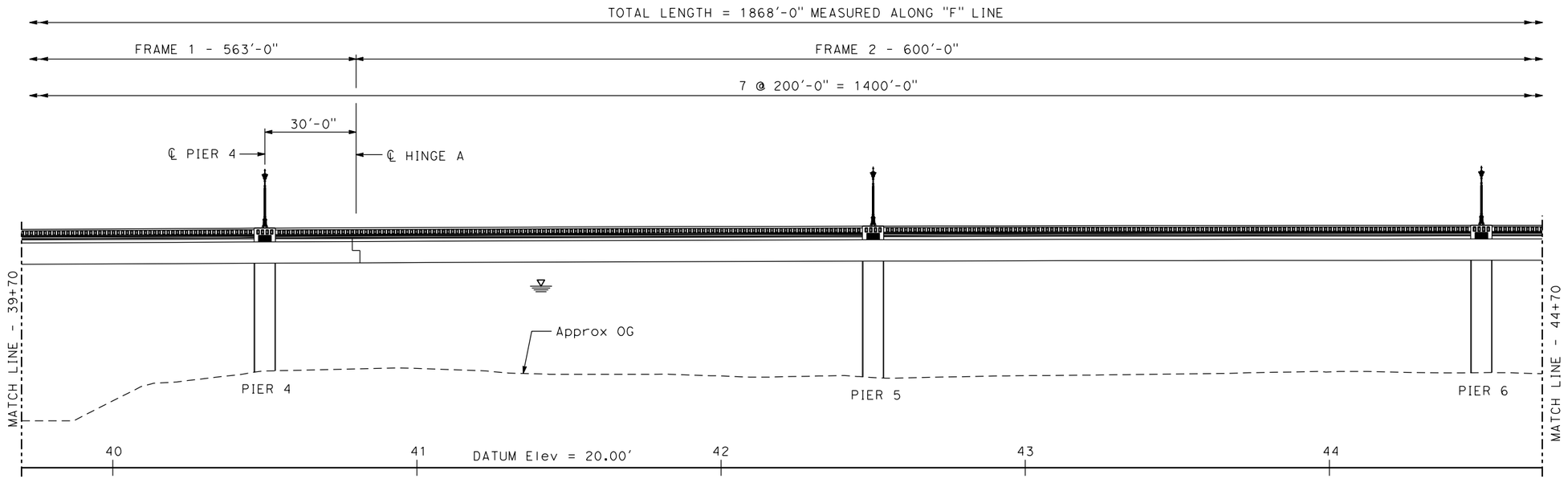

DEVELOPED ELEVATION

1" = 20'

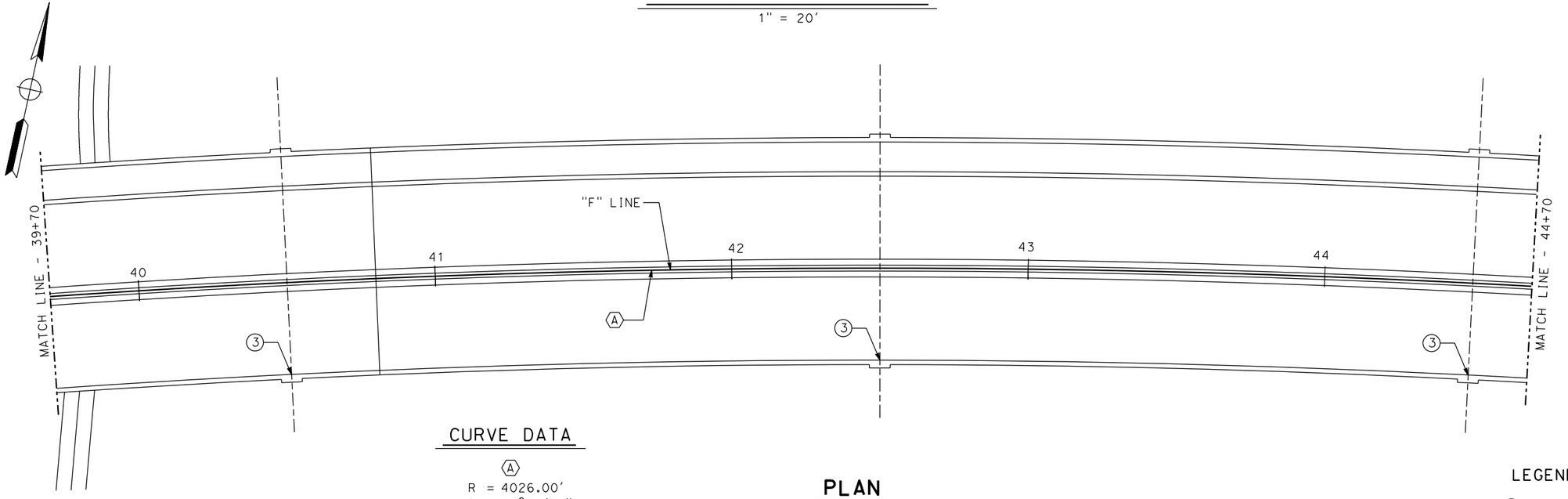

CURVE DATA

(A)

R = 4026.00'
△ = 27°34'39"
T = 988.04'
L = 1937.79'

PLAN

1" = 20'

LEGEND

(3) Paint Bent No.

200 yr WSE = 79.6. For "HYDROLOGIC SUMMARY", see "FOUNDATION PLAN NO. 5" sheet

DESIGN OVERSIGHT

SIGN OFF DATE

	BY	CHECKED
DESIGN	R. Griggs	T. Osterkamp
DETAILS	K. Dang	CHECKED
QUANTITIES	BY	CHECKED

PREPARED FOR THE
STATE OF CALIFORNIA
DEPARTMENT OF TRANSPORTATION

T. Osterkamp
PROJECT ENGINEER

BRIDGE NO. 18C-0012
POST MILES

5TH STREET BRIDGE OVER FEATHER RIVER
STRUCTURE PLAN NO. 2

DESIGN DETAIL SHEET (ENGLISH) (REV.7/16/10)

ORIGINAL SCALE IN INCHES FOR REDUCED PLANS 0 1 2 3

UNIT:
PROJECT NUMBER & PHASE: CONTRACT NO.:

DISREGARD PRINTS BEARING EARLIER REVISION DATES →

REVISION DATES

SHEET 4 OF 61

FILE => J:\1858_5th_St_BR\517\5th BRIDGE\1858SP02.dgn

USERNAME => untitled DATE PLOTTED => 8/12/2016 TIME PLOTTED => 10:49:57 AM

DIST	COUNTY	ROUTE	POST MILES TOTAL PROJECT	SHEET No	TOTAL SHEETS
03	Sut/Yub	Local			

REGISTERED CIVIL ENGINEER DATE

PLANS APPROVAL DATE

REGISTERED PROFESSIONAL ENGINEER
ROSA GRIGGS
No. 54169
Exp. 12-31-17
CIVIL
STATE OF CALIFORNIA

CITY OF YUBA CITY
1201 CIVIC CENTER BOULEVARD
YUBA CITY, CA 95993

Dokken Engineering
110 Blue Ravine Rd, Suite 200
Folsom, CA 95630 (916) 858-0642

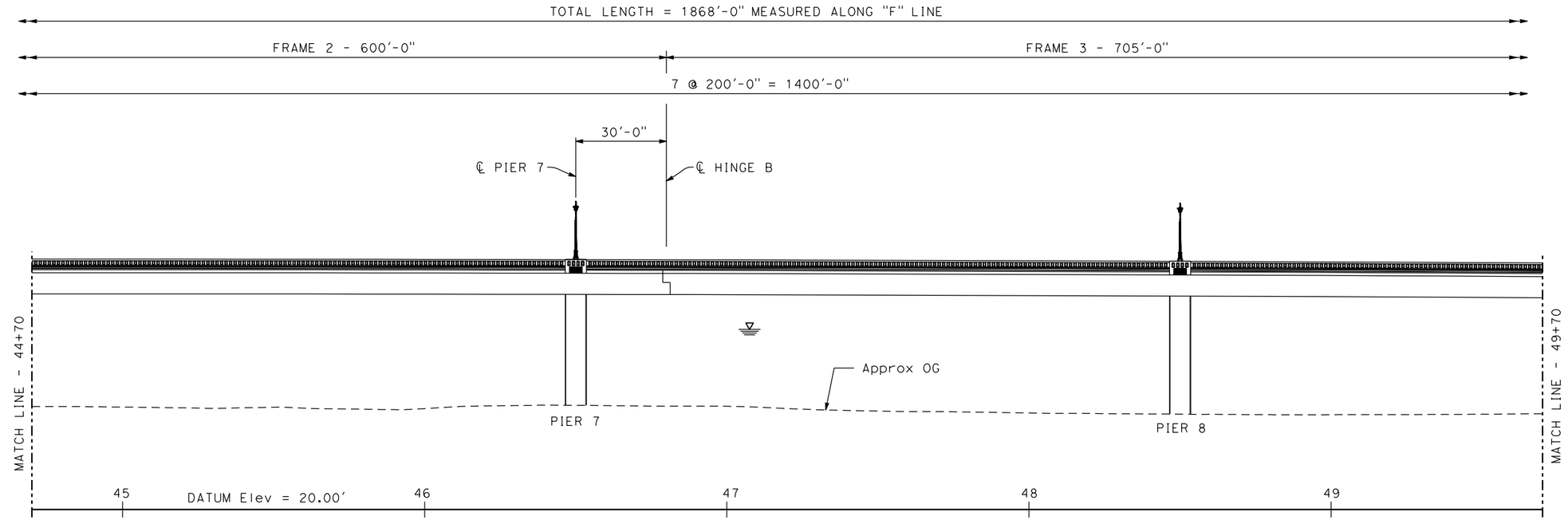

DEVELOPED ELEVATION

1" = 20'

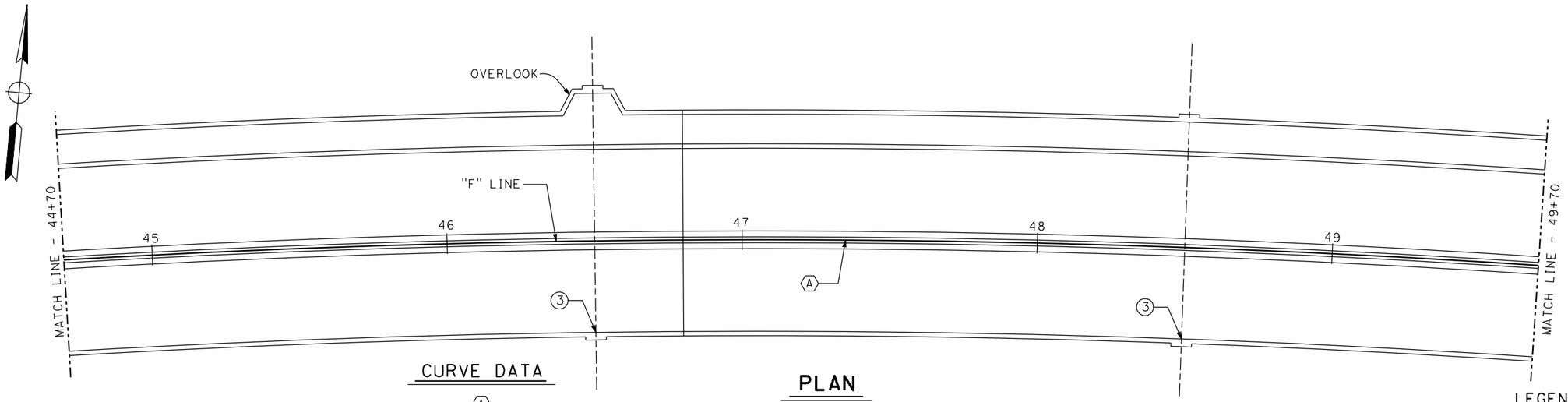

CURVE DATA

Ⓐ

R = 4026.00'
△ = 27°34'39"
T = 988.04'
L = 1937.79'

PLAN

1" = 20'

LEGEND

③ Paint Bent No.

200 yr WSE = 79.6. For "HYDROLOGIC SUMMARY", see "FOUNDATION PLAN NO. 5" sheet

DESIGN OVERSIGHT		DESIGN	BY R. Griggs	CHECKED T. Osterkamp	PREPARED FOR THE STATE OF CALIFORNIA DEPARTMENT OF TRANSPORTATION
SIGN OFF DATE		DETAILS	BY K. Dang	CHECKED	
		QUANTITIES	BY	CHECKED	

T. Osterkamp
PROJECT ENGINEER

BRIDGE NO. 18C-0012
POST MILES

5TH STREET BRIDGE OVER FEATHER RIVER
STRUCTURE PLAN NO. 3

DESIGN DETAIL SHEET (ENGLISH) (REV.7/16/10)

ORIGINAL SCALE IN INCHES FOR REDUCED PLANS 0 1 2 3

UNIT:
PROJECT NUMBER & PHASE: CONTRACT NO.:

DISREGARD PRINTS BEARING EARLIER REVISION DATES →

REVISION DATES: -

SHEET 5 OF 61

FILE => J:\1858_5th_St_BR\517\5th BRIDGE\1858SP03.dgn

USERNAME => unfitted DATE PLOTTED => 8/12/2016 TIME PLOTTED => 10:49:58 AM

DIST	COUNTY	ROUTE	POST MILES TOTAL PROJECT	SHEET No	TOTAL SHEETS
03	Sut/Yub	Local			

REGISTERED CIVIL ENGINEER _____ DATE _____

PLANS APPROVAL DATE _____

REGISTERED PROFESSIONAL ENGINEER
ROSA GRIGGS
No. 54169
Exp. 12-31-17
CIVIL
STATE OF CALIFORNIA

CITY OF YUBA CITY
1201 CIVIC CENTER BOULEVARD
YUBA CITY, CA 95993

Dokken Engineering
110 Blue Ravine Rd, Suite 200
Folsom, CA 95630 (916) 858-0642

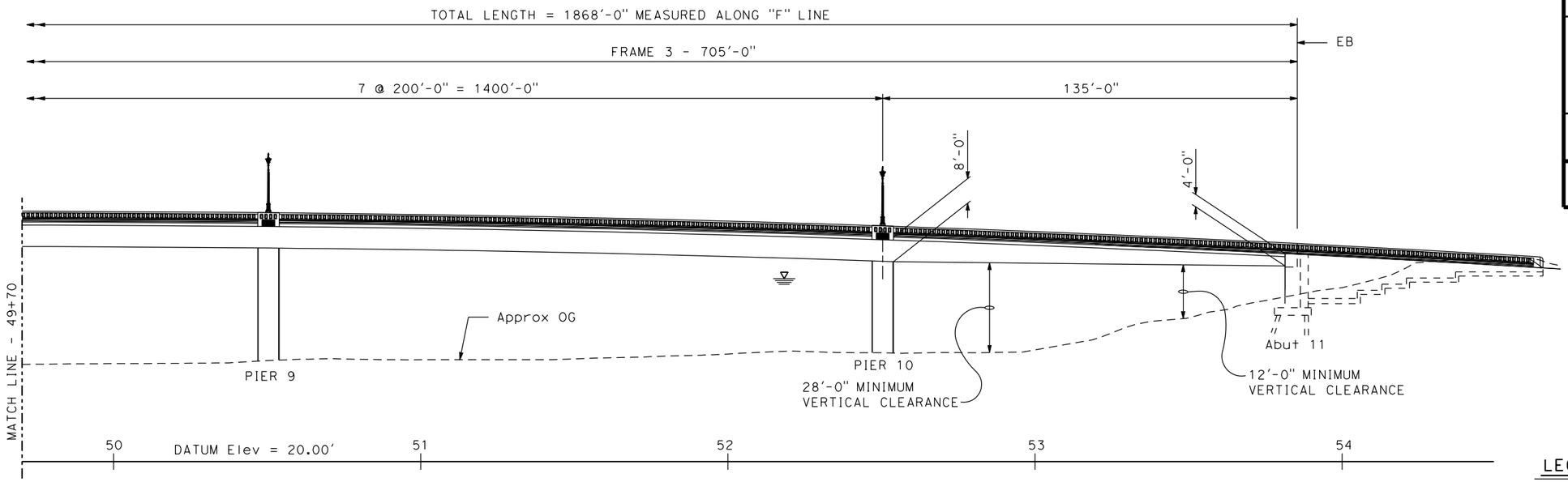

DEVELOPED ELEVATION

1" = 20'

LEGEND

(1) Paint "Bridge No. 18C-0012"
(2) Paint "Fifth Street Bridge"
(3) Paint Bent No
Point of minimum vertical clearance
200 yr WSE = 79.6. For "HYDROLOGIC SUMMARY", see "FOUNDATION PLAN NO. 5" sheet

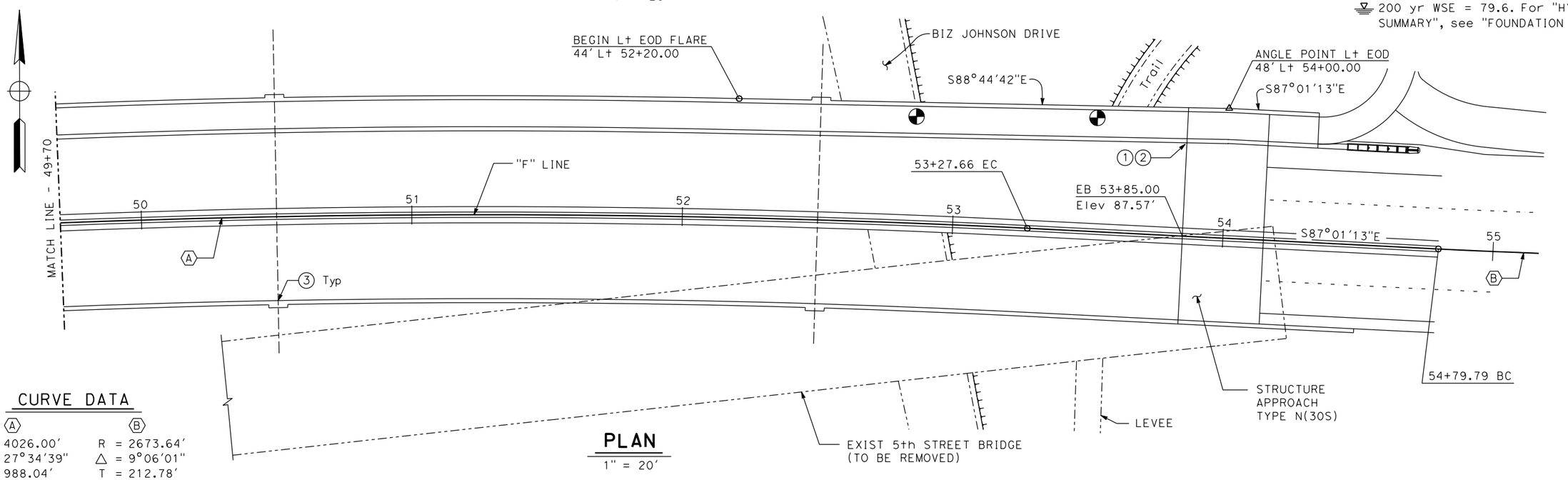

PLAN

1" = 20'

CURVE DATA

(A)	(B)
R = 4026.00'	R = 2673.64'
△ = 27°34'39"	△ = 9°06'01"
T = 988.04'	T = 212.78'
L = 1937.79'	L = 424.66'

DESIGN OVERSIGHT _____

SIGN OFF DATE _____

	BY	CHECKED
DESIGN	R. Griggs	T. Osterkamp
DETAILS	K. Dang	
QUANTITIES		

PREPARED FOR THE STATE OF CALIFORNIA DEPARTMENT OF TRANSPORTATION

T. Osterkamp
PROJECT ENGINEER

BRIDGE NO. 18C-0012
POST MILES

5TH STREET BRIDGE OVER FEATHER RIVER
STRUCTURE PLAN NO. 4

DESIGN DETAIL SHEET (ENGLISH) (REV.7/16/10)

ORIGINAL SCALE IN INCHES FOR REDUCED PLANS 0 1 2 3

UNIT: PROJECT NUMBER & PHASE: CONTRACT NO.:

DISREGARD PRINTS BEARING EARLIER REVISION DATES →

REVISION DATES					SHEET	OF
-					6	61

FILE => J:\1858_5th_St_BR\517\5th BRIDGE\1858SP04.dgn

USERNAME => untitled DATE PLOTTED => 8/12/2016 TIME PLOTTED => 10:49:58 AM

DIST	COUNTY	ROUTE	POST MILES TOTAL PROJECT	SHEET No	TOTAL SHEETS
03	Sut/Yub	Local			

REGISTERED CIVIL ENGINEER _____ DATE _____

PLANS APPROVAL DATE _____

REGISTERED PROFESSIONAL ENGINEER
ROSA GRIGGS
No. 54169
Exp. 12-31-17
CIVIL
STATE OF CALIFORNIA

CITY OF YUBA CITY
1201 CIVIC CENTER BOULEVARD
YUBA CITY, CA 95993

Dokken Engineering
110 Blue Ravine Rd, Suite 200
Folsom, CA 95630 (916) 858-0642

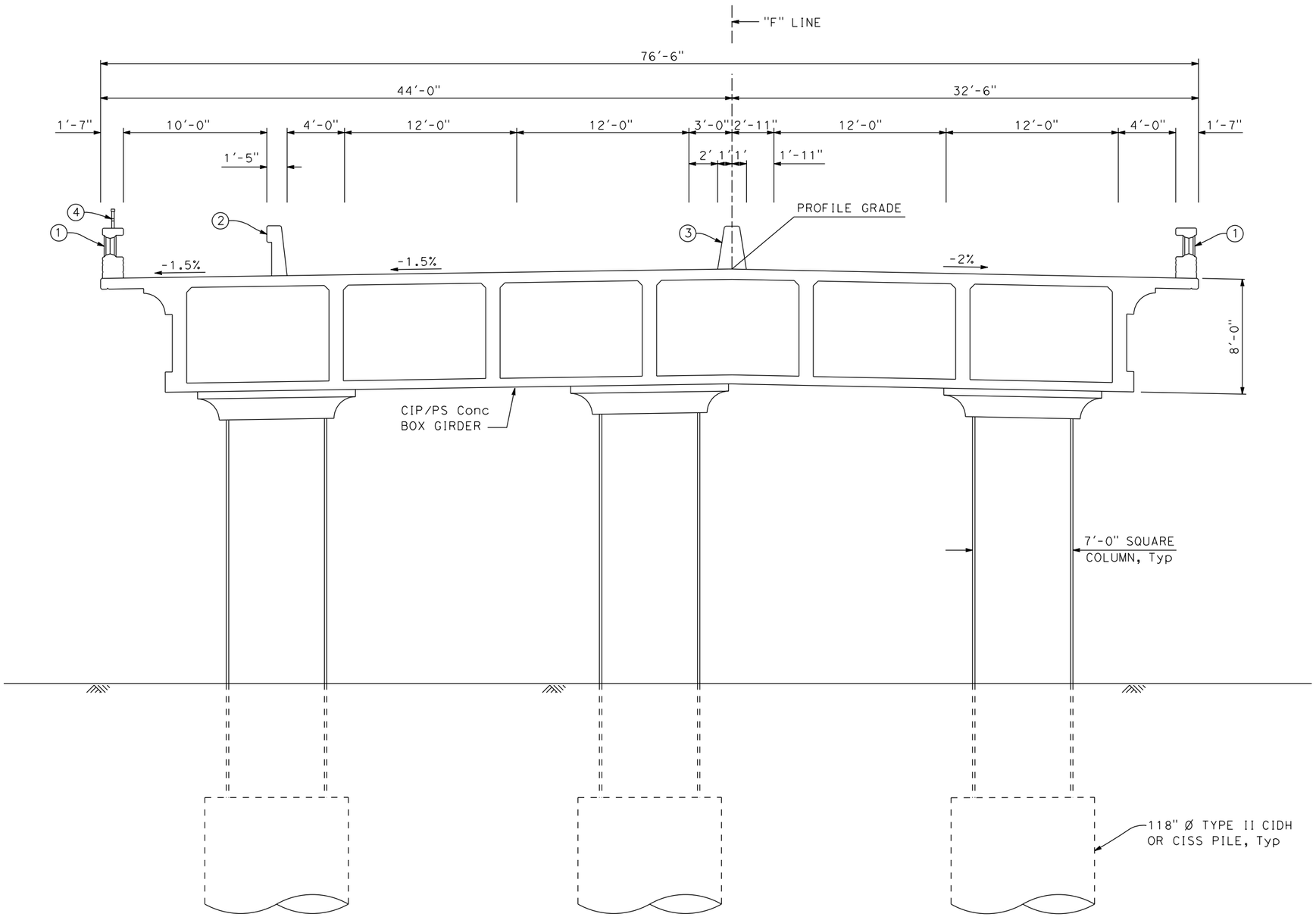

TYPICAL SECTION - FRAME 1 & FRAME 2

1/4" = 1'-0"

LEGEND

1. Concrete Barrier Type C412
2. Concrete Barrier Type 742 (Mod)
3. Concrete Barrier Type 60A
4. Tubular Hand Railing

DESIGN OVERSIGHT		DESIGN	BY R. Griggs	CHECKED T. Osterkamp	PREPARED FOR THE STATE OF CALIFORNIA DEPARTMENT OF TRANSPORTATION
SIGN OFF DATE		DETAILS	BY K. Dang	CHECKED	
		QUANTITIES	BY	CHECKED	

T. Osterkamp
PROJECT ENGINEER

BRIDGE NO. 18C-0012
POST MILES

5TH STREET BRIDGE OVER FEATHER RIVER
STRUCTURE PLAN NO. 5

DESIGN DETAIL SHEET (ENGLISH) (REV.7/16/10)

ORIGINAL SCALE IN INCHES FOR REDUCED PLANS 0 1 2 3

UNIT:
PROJECT NUMBER & PHASE: CONTRACT NO.:

DISREGARD PRINTS BEARING EARLIER REVISION DATES →

REVISION DATES					SHEET	OF
-					7	61

FILE => J:\1858_5th_St_BR\517\5th BRIDGE\1858SP05.dgn

USERNAME => untitled DATE PLOTTED => 8/12/2016 TIME PLOTTED => 10:49:59 AM

DIST	COUNTY	ROUTE	POST MILES TOTAL PROJECT	SHEET No	TOTAL SHEETS
03	Sut/Yub	Local			

REGISTERED CIVIL ENGINEER DATE

PLANS APPROVAL DATE

REGISTERED PROFESSIONAL ENGINEER — ROSA GRIGGS — No. 54169 — Exp. 12-31-17 — CIVIL — STATE OF CALIFORNIA

CITY OF YUBA CITY
1201 CIVIC CENTER BOULEVARD
YUBA CITY, CA 95993

Dokken Engineering
110 Blue Ravine Rd, Suite 200
Folsom, CA 95630 (916) 858-0642

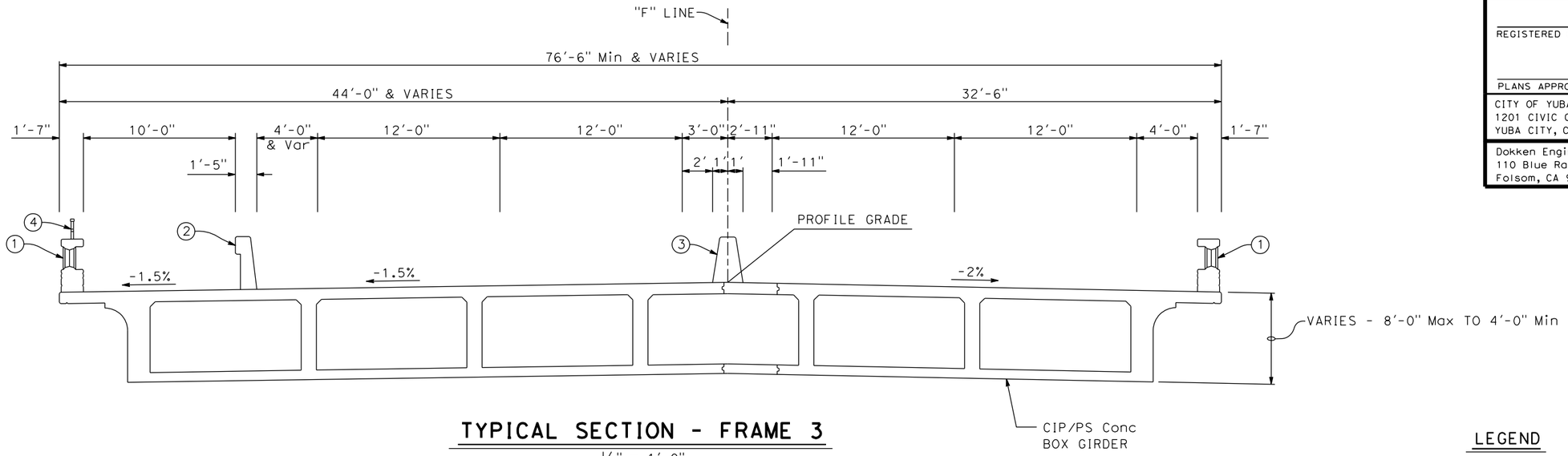

TYPICAL SECTION - FRAME 3

1/4" = 1'-0"

LEGEND

1. Concrete Barrier Type C412
2. Concrete Barrier Type 742 (Mod)
3. Concrete Barrier Type 60A
4. Tubular Hand Railing
5. Temporary Railing Type K

Denotes exist structure removal

Denotes exist structure

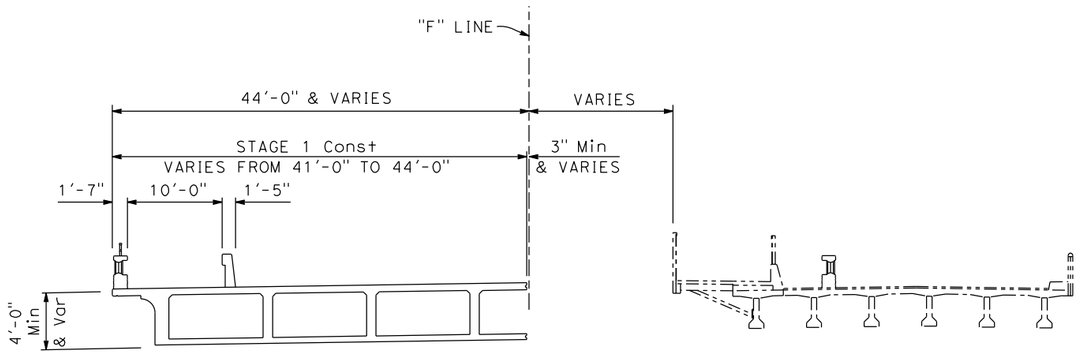

STAGE 1

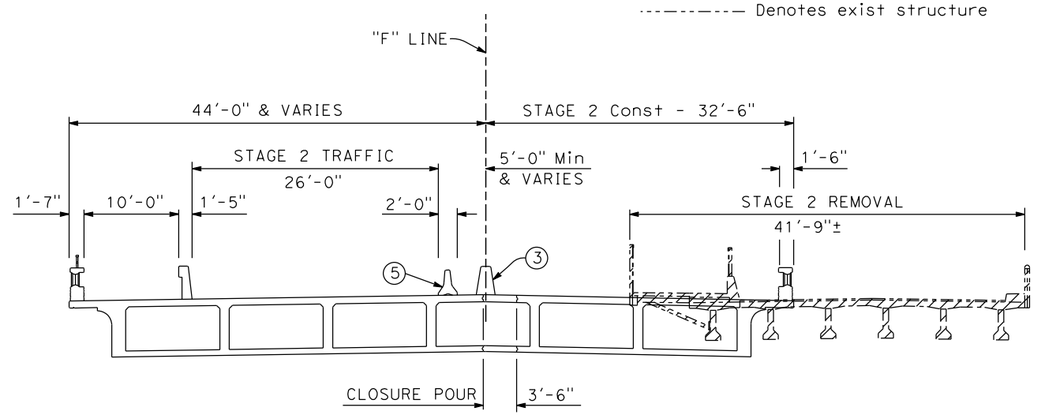

STAGE 2

STAGE CONSTRUCTION - FRAME 3

1/8" = 1'-0"

DESIGN OVERSIGHT		DESIGN	BY R. Griggs	CHECKED T. Osterkamp	PREPARED FOR THE STATE OF CALIFORNIA DEPARTMENT OF TRANSPORTATION	T. Osterkamp PROJECT ENGINEER	BRIDGE NO. 18C-0012 / POST MILES	5TH STREET BRIDGE OVER FEATHER RIVER
SIGN OFF DATE		DETAILS	BY K. Dang	CHECKED				STRUCTURE PLAN NO. 6
DESIGN DETAIL SHEET (ENGLISH) (REV.7/16/10)		QUANTITIES	BY	CHECKED	ORIGINAL SCALE IN INCHES FOR REDUCED PLANS 0 1 2 3	UNIT: PROJECT NUMBER & PHASE: CONTRACT NO.:	DISREGARD PRINTS BEARING EARLIER REVISION DATES →	REVISION DATES - SHEET 8 OF 61

FILE => J:\1858_5th_St_BR\517\5th BRIDGE\1858SP06.dgn

USERNAME => unfitted DATE PLOTTED => 8/12/2016 TIME PLOTTED => 10:49:59 AM

DIST	COUNTY	ROUTE	POST MILES TOTAL PROJECT	SHEET No	TOTAL SHEETS
03	Sut/Yub	Local			

REGISTERED CIVIL ENGINEER DATE

PLANS APPROVAL DATE

REGISTERED PROFESSIONAL ENGINEER
ROSA GRIGGS
No. 54169
Exp. 12-31-17
CIVIL
STATE OF CALIFORNIA

CITY OF YUBA CITY
1201 CIVIC CENTER BOULEVARD
YUBA CITY, CA 95993

Dokken Engineering
110 Blue Ravine Rd, Suite 200
Folsom, CA 95630 (916) 858-0642

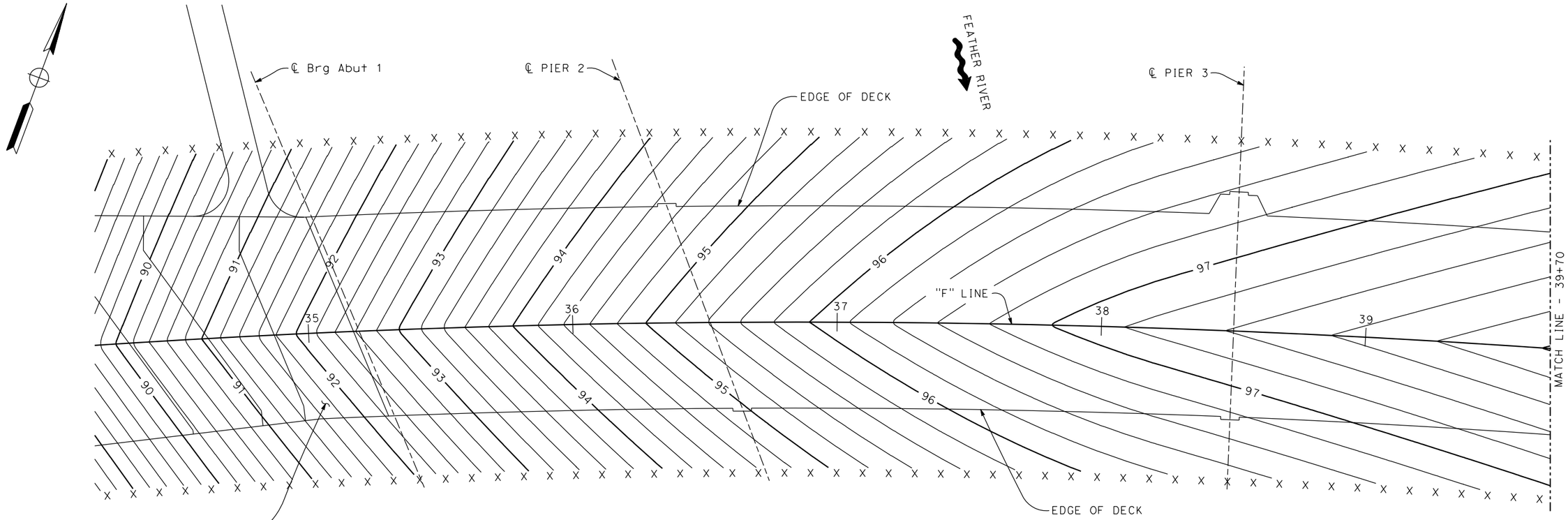

PLAN

1" = 20'

NOTES:

Contours do not include camber.
Contour interval is 0.20'
X Denotes 10' interval along station line

DESIGN OVERSIGHT		DESIGN	BY R. Griggs	CHECKED T. Osterkamp	PREPARED FOR THE STATE OF CALIFORNIA DEPARTMENT OF TRANSPORTATION	T. Osterkamp PROJECT ENGINEER	BRIDGE NO. 18C-0012	5TH STREET BRIDGE OVER FEATHER RIVER
SIGN OFF DATE		DETAILS	BY K. Dang	CHECKED			POST MILES	DECK CONTOURS NO. 1
DESIGN DETAIL SHEET (ENGLISH) (REV.7/16/10)		QUANTITIES	BY	CHECKED	ORIGINAL SCALE IN INCHES FOR REDUCED PLANS 0 1 2 3	UNIT: PROJECT NUMBER & PHASE: CONTRACT NO.:	DISREGARD PRINTS BEARING EARLIER REVISION DATES →	REVISION DATES - SHEET 9 OF 61

FILE => J:\1858_5th_St_BR\517\5th BRIDGE\1858DC01.dgn

USERNAME => untitled DATE PLOTTED => 8/12/2016 TIME PLOTTED => 10:50:00 AM

DIST	COUNTY	ROUTE	POST MILES TOTAL PROJECT	SHEET No	TOTAL SHEETS
03	Sut/Yub	Local			

REGISTERED CIVIL ENGINEER DATE

PLANS APPROVAL DATE

REGISTERED PROFESSIONAL ENGINEER
ROSA GRIGGS
No. 54169
Exp. 12-31-17
CIVIL
STATE OF CALIFORNIA

CITY OF YUBA CITY
1201 CIVIC CENTER BOULEVARD
YUBA CITY, CA 95993

Dokken Engineering
110 Blue Ravine Rd, Suite 200
Folsom, CA 95630 (916) 858-0642

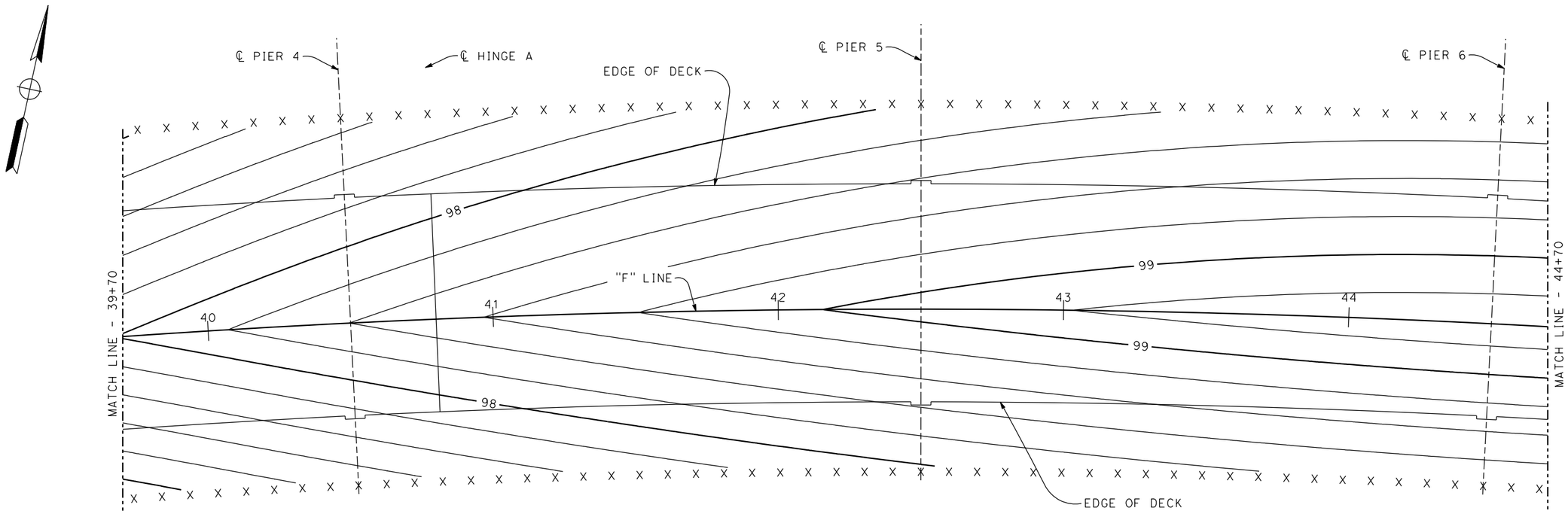

PLAN

1" = 20'

NOTES:

Contours do not include camber.
Contour interval is 0.20'
X Denotes 10' interval along station line

DESIGN OVERSIGHT		DESIGN	BY R. Griggs	CHECKED T. Osterkamp	PREPARED FOR THE STATE OF CALIFORNIA DEPARTMENT OF TRANSPORTATION	T. Osterkamp PROJECT ENGINEER	BRIDGE NO. 18C-0012
SIGN OFF DATE		DETAILS	BY K. Dang	CHECKED			POST MILES
DESIGN DETAIL SHEET (ENGLISH) (REV.7/16/10)		QUANTITIES	BY	CHECKED	ORIGINAL SCALE IN INCHES FOR REDUCED PLANS 0 1 2 3	UNIT: PROJECT NUMBER & PHASE: CONTRACT NO.:	DISREGARD PRINTS BEARING EARLIER REVISION DATES →

5TH STREET BRIDGE OVER FEATHER RIVER
DECK CONTOURS NO. 2

REVISION DATES | SHEET 10 | OF 61

FILE => J:\1858_5th_St_BR\517\5th BRIDGE\1858DC02.dgn

USERNAME => untitled DATE PLOTTED => 8/12/2016 TIME PLOTTED => 10:50:00 AM

DIST	COUNTY	ROUTE	POST MILES TOTAL PROJECT	SHEET No	TOTAL SHEETS
03	Sut/Yub	Local			

REGISTERED CIVIL ENGINEER DATE

PLANS APPROVAL DATE

REGISTERED PROFESSIONAL ENGINEER
ROSA GRIGGS
No. 54169
Exp. 12-31-17
CIVIL
STATE OF CALIFORNIA

CITY OF YUBA CITY
1201 CIVIC CENTER BOULEVARD
YUBA CITY, CA 95993

Dokken Engineering
110 Blue Ravine Rd, Suite 200
Folsom, CA 95630 (916) 858-0642

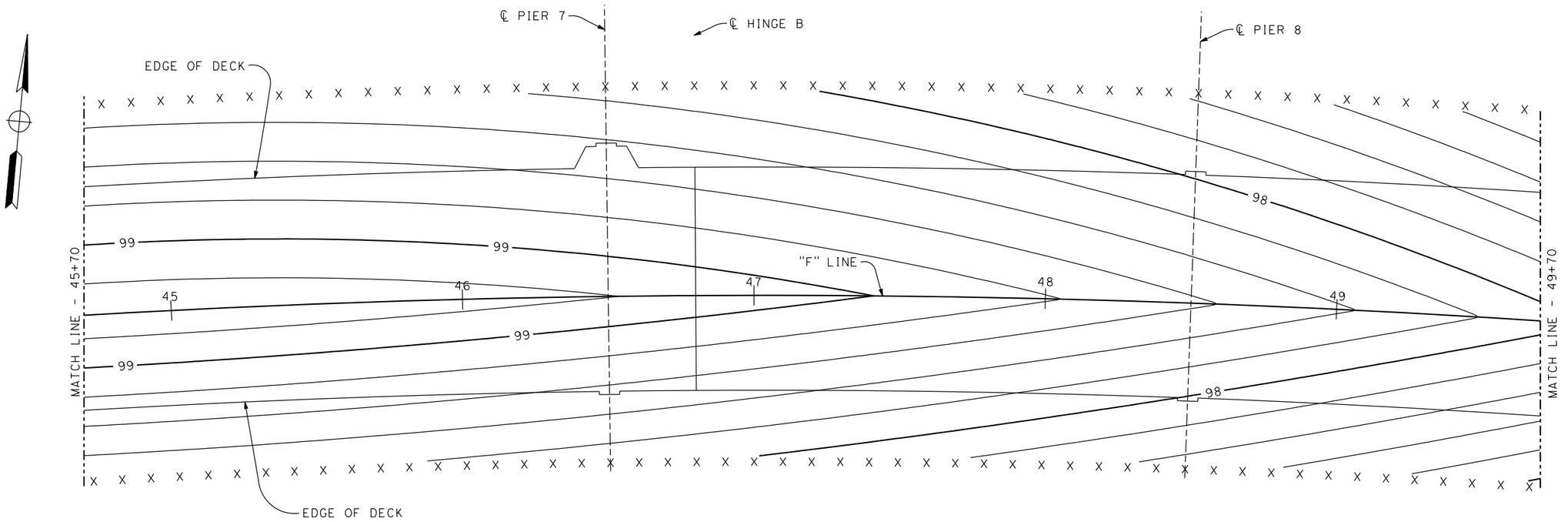

PLAN

1" = 20'

NOTES:

Contours do not include camber.
Contour interval is 0.20'
X Denotes 10' interval along station line

DESIGN OVERSIGHT		DESIGN	BY R. Griggs	CHECKED T. Osterkamp	PREPARED FOR THE STATE OF CALIFORNIA DEPARTMENT OF TRANSPORTATION	T. Osterkamp PROJECT ENGINEER	BRIDGE NO. 18C-0012
SIGN OFF DATE		DETAILS	BY K. Dang	CHECKED			POST MILES
		QUANTITIES	BY	CHECKED			

5TH STREET BRIDGE OVER FEATHER RIVER
DECK CONTOURS NO. 3

DESIGN DETAIL SHEET (ENGLISH) (REV.7/16/10)

ORIGINAL SCALE IN INCHES FOR REDUCED PLANS 0 1 2 3

UNIT:
PROJECT NUMBER & PHASE: CONTRACT NO.:

DISREGARD PRINTS BEARING EARLIER REVISION DATES →

REVISION DATES				SHEET	OF
-				11	61

FILE => J:\1858_5th_St_BR\517\5th BRIDGE\1858DC03.dgn

USERNAME => unfitted DATE PLOTTED => 8/12/2016 TIME PLOTTED => 10:50:00 AM

DIST	COUNTY	ROUTE	POST MILES TOTAL PROJECT	SHEET No	TOTAL SHEETS
03	Sut/Yub	Local			

REGISTERED CIVIL ENGINEER _____ DATE _____

PLANS APPROVAL DATE _____

REGISTERED PROFESSIONAL ENGINEER
ROSA GRIGGS
No. 54169
Exp. 12-31-17
CIVIL
STATE OF CALIFORNIA

CITY OF YUBA CITY
1201 CIVIC CENTER BOULEVARD
YUBA CITY, CA 95993

Dokken Engineering
110 Blue Ravine Rd, Suite 200
Folsom, CA 95630 (916) 858-0642

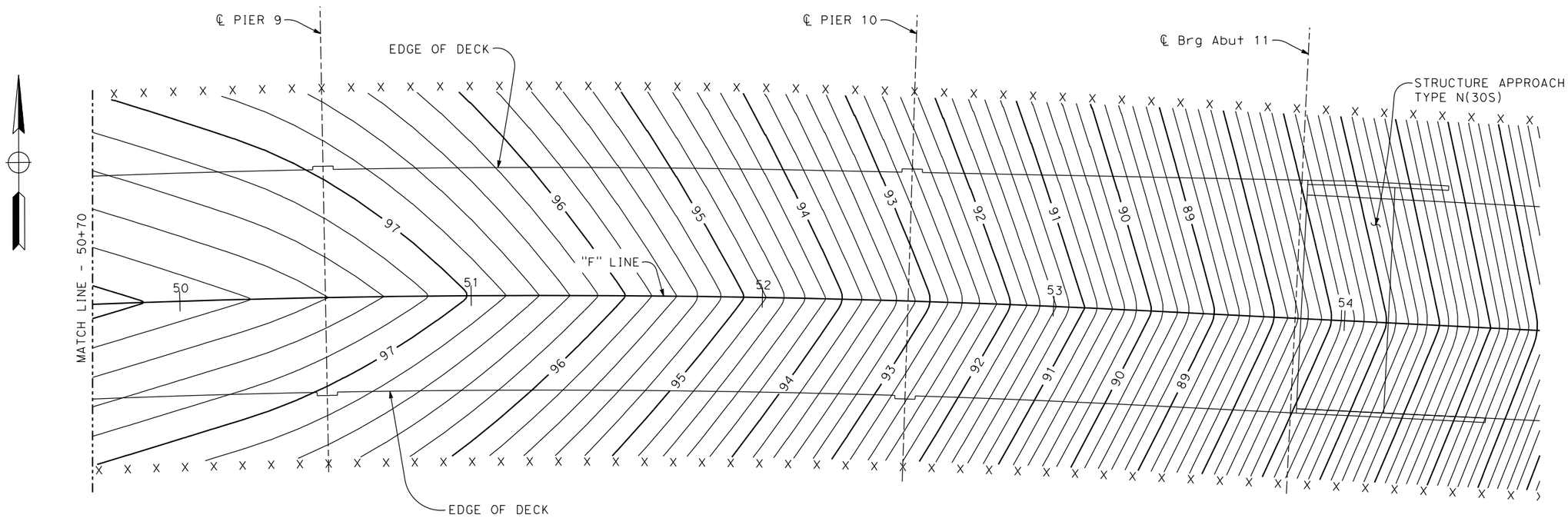

PLAN

1" = 20'

NOTES:

Contours do not include camber.
Contour interval is 0.20'
X Denotes 10' interval along station line

DESIGN OVERSIGHT		DESIGN	BY R. Griggs	CHECKED T. Osterkamp	PREPARED FOR THE STATE OF CALIFORNIA DEPARTMENT OF TRANSPORTATION	T. Osterkamp PROJECT ENGINEER	BRIDGE NO. 18C-0012
SIGN OFF DATE		DETAILS	BY K. Dang	CHECKED			POST MILES
		QUANTITIES	BY	CHECKED			

5TH STREET BRIDGE OVER FEATHER RIVER
DECK CONTOURS NO. 4

DESIGN DETAIL SHEET (ENGLISH) (REV.7/16/10)

ORIGINAL SCALE IN INCHES FOR REDUCED PLANS 0 1 2 3

UNIT:
PROJECT NUMBER & PHASE: CONTRACT NO.:

DISREGARD PRINTS BEARING EARLIER REVISION DATES →

REVISION DATES				SHEET	OF
-				12	61

FILE => J:\1858_5th_St_BR\517\5th BRIDGE\1858DC04.dgn

USERNAME => untitled DATE PLOTTED => 8/12/2016 TIME PLOTTED => 10:50:01 AM

DIST	COUNTY	ROUTE	POST MILES TOTAL PROJECT	SHEET No	TOTAL SHEETS
03	Sut/Yub	Local			

REGISTERED CIVIL ENGINEER _____ DATE _____

PLANS APPROVAL DATE _____

REGISTERED PROFESSIONAL ENGINEER — ROSA GRIGGS — No. 54169 — Exp. 12-31-17 — CIVIL — STATE OF CALIFORNIA

CITY OF YUBA CITY
1201 CIVIC CENTER BOULEVARD
YUBA CITY, CA 95993

Dokken Engineering
110 Blue Ravine Rd, Suite 200
Folsom, CA 95630 (916) 858-0642

HYDROLOGIC SUMMARY

DRAINAGE AREA: _____ square miles

	DESIGN FLOOD	BASE FLOOD	OVERTOPPING FLOOD
FREQUENCY (Years)			
DISCHARGE (Cubic feet per second)			
WATER SURFACE (Elevation at bridge)			

Flood plain data are based upon information available when the plans were prepared and are shown to meet Federal requirements. The accuracy of said information is not warranted by the State, County, or consultants and interested or affected parties should make their own investigations.

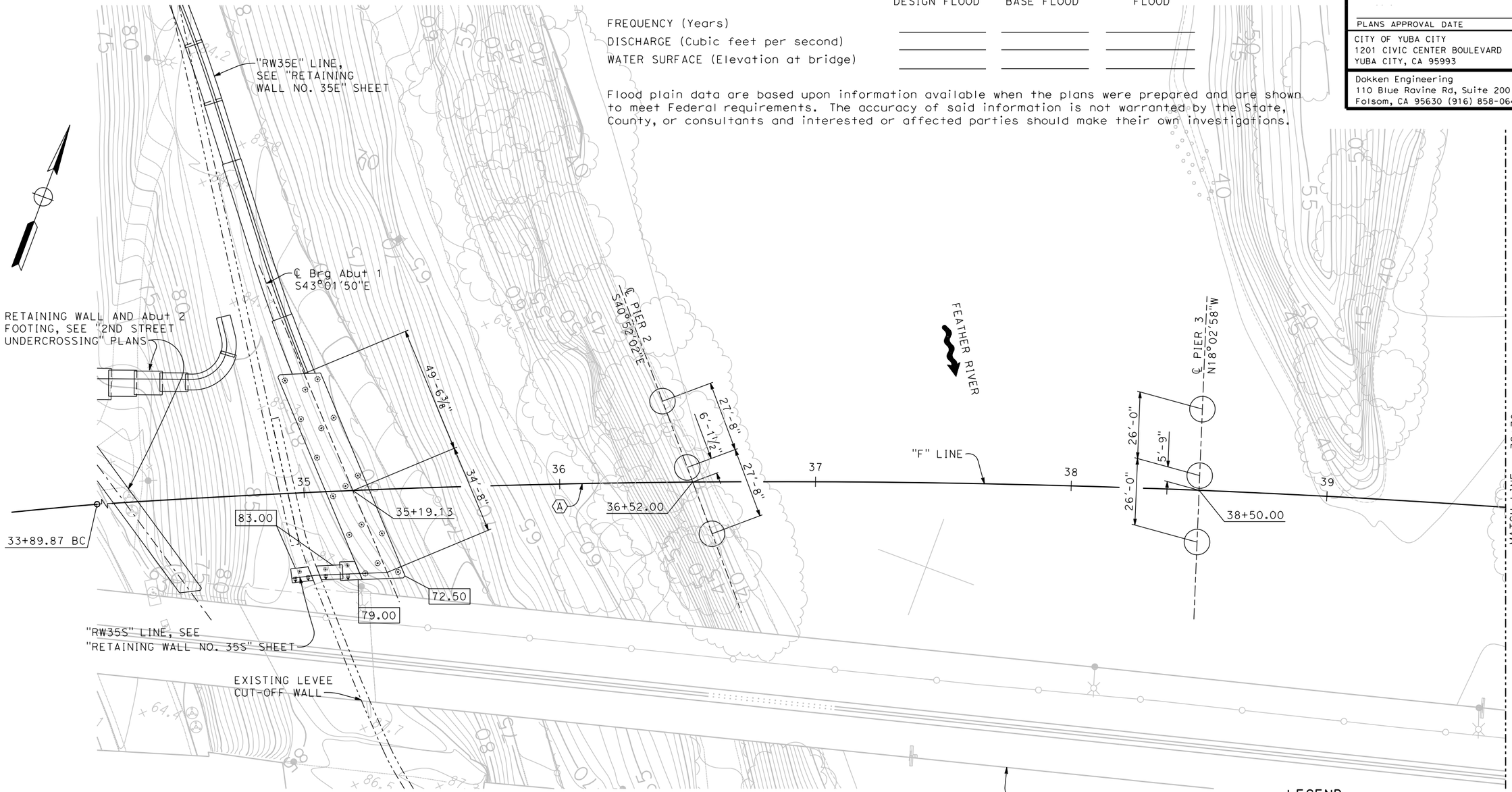

CURVE DATA

Ⓐ
R = 4026.00′
△ = 27°34′39"
T = 988.04′
L = 1937.79′

PLAN

1" = 20′

LEGEND

Denotes bottom of footing elev
Denotes vertical pile. All piles not shown.
Denotes pile battered 1:3. All piles not shown.

GEOTECHNICAL PROFESSIONAL APPROVAL DATE

DESIGN OVERSIGHT

SIGN OFF DATE

SCALE:	VERT.DATUM NAVD 88	HORZ.DATUM			
PHOTOGRAMMETRY AS OF:		ALIGNMENT TIES			
SURVEYED	BY	DRAFTED	BY		
FIELD CHECKED	BY	CHECKED	BY		

DESIGN	BY R. Griggs	CHECKED T. Osterkamp	
DETAILS	BY K. Dang	CHECKED	
QUANTITIES	BY	CHECKED	

PREPARED FOR THE STATE OF CALIFORNIA DEPARTMENT OF TRANSPORTATION

T. Osterkamp
PROJECT ENGINEER

BRIDGE NO. 18C-0012
POST MILES

5TH STREET BRIDGE OVER FEATHER RIVER
FOUNDATION PLAN NO. 1

FOUNDATION PLAN SHEET (ENGLISH) (REV. 03/14/12)

ORIGINAL SCALE IN INCHES FOR REDUCED PLANS 0 1 2 3

UNIT:
PROJECT NUMBER & PHASE: CONTRACT NO.:

DISREGARD PRINTS BEARING EARLIER REVISION DATES →

REVISION DATES					SHEET	OF
x					13	61

FILE => J:\1858_5th_St_BR\517\5th BRIDGE\1858FP01.dgn

USERNAME => untitled DATE PLOTTED => 8/12/2016 TIME PLOTTED => 10:50:02 AM

DIST	COUNTY	ROUTE	POST MILES TOTAL PROJECT	SHEET No	TOTAL SHEETS
03	Sut/Yub	Local			

REGISTERED CIVIL ENGINEER DATE

REGISTERED PROFESSIONAL ENGINEER
ROSA GRIGGS
No. 54169
Exp. 12-31-17
CIVIL
STATE OF CALIFORNIA

PLANS APPROVAL DATE

CITY OF YUBA CITY
1201 CIVIC CENTER BOULEVARD
YUBA CITY, CA 95993

Dokken Engineering
110 Blue Ravine Rd, Suite 200
Folsom, CA 95630 (916) 858-0642

GEOTECHNICAL PROFESSIONAL APPROVAL DATE

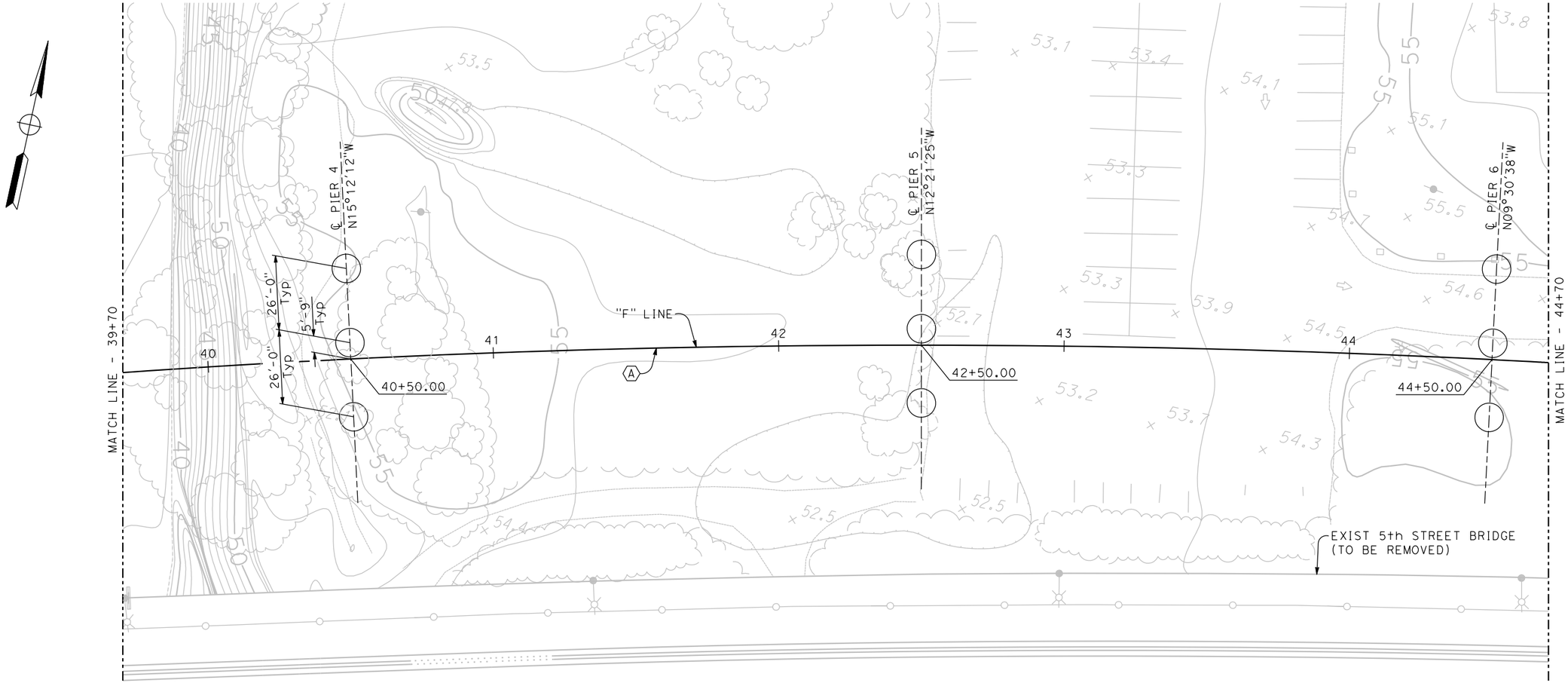

CURVE DATA

Ⓐ
R = 4026.00′
△ = 27°34′39"
T = 988.04′
L = 1937.79′

PLAN

1" = 20′

DESIGN OVERSIGHT	SCALE:	VERT.DATUM NAVD 88	HORZ.DATUM	DESIGN	BY R. Griggs	CHECKED T. Osterkamp	PREPARED FOR THE STATE OF CALIFORNIA DEPARTMENT OF TRANSPORTATION	T. Osterkamp PROJECT ENGINEER	BRIDGE NO. 18C-0012	5TH STREET BRIDGE OVER FEATHER RIVER
	PHOTOGRAMMETRY AS OF:		ALIGNMENT TIES	DETAILS	BY K. Dang	CHECKED			POST MILES	FOUNDATION PLAN NO. 2
SIGN OFF DATE	SURVEYED BY		DRAFTED BY	QUANTITIES	BY	CHECKED				
	FIELD CHECKED BY		CHECKED BY							

FOUNDATION PLAN SHEET (ENGLISH) (REV. 03/14/12)

ORIGINAL SCALE IN INCHES FOR REDUCED PLANS 0 1 2 3

UNIT:
PROJECT NUMBER & PHASE: CONTRACT NO.:

DISREGARD PRINTS BEARING EARLIER REVISION DATES →

REVISION DATES: x

SHEET 14 OF 61

FILE => J:\1858_5th_St_BR\517\5th BRIDGE\1858FP02.dgn

USERNAME => untitled DATE PLOTTED => 8/12/2016 TIME PLOTTED => 10:50:02 AM

DIST	COUNTY	ROUTE	POST MILES TOTAL PROJECT	SHEET No	TOTAL SHEETS
03	Sut/Yub	Local			

REGISTERED CIVIL ENGINEER DATE

PLANS APPROVAL DATE

REGISTERED PROFESSIONAL ENGINEER
ROSA GRIGGS
No. 54169
Exp. 12-31-17
CIVIL
STATE OF CALIFORNIA

CITY OF YUBA CITY
1201 CIVIC CENTER BOULEVARD
YUBA CITY, CA 95993

Dokken Engineering
110 Blue Ravine Rd, Suite 200
Folsom, CA 95630 (916) 858-0642

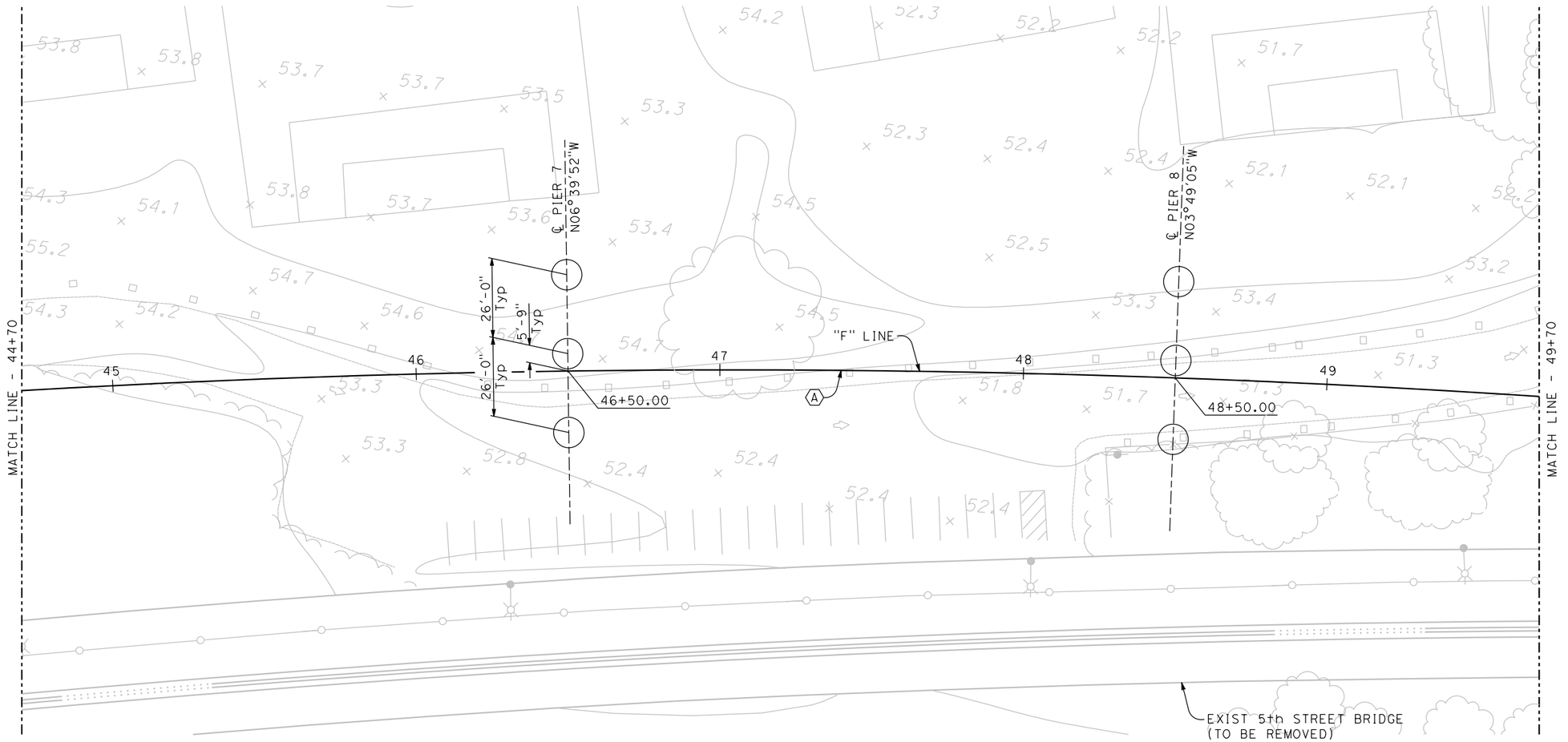

CURVE DATA

Ⓐ

R = 4026.00′
△ = 27°34′39″
T = 988.04′
L = 1937.79′

PLAN

1" = 20′

GEOTECHNICAL PROFESSIONAL APPROVAL DATE

DESIGN OVERSIGHT	SCALE:	VERT.DATUM NAVD 88	HORZ.DATUM	DESIGN	BY R. Griggs	CHECKED T. Osterkamp	PREPARED FOR THE STATE OF CALIFORNIA DEPARTMENT OF TRANSPORTATION	T. Osterkamp PROJECT ENGINEER	BRIDGE NO. 18C-0012	5TH STREET BRIDGE OVER FEATHER RIVER
	PHOTOGRAMMETRY AS OF:	ALIGNMENT TIES		DETAILS	BY K. Dang	CHECKED			POST MILES	FOUNDATION PLAN NO. 3
SIGN OFF DATE	SURVEYED BY	DRAFTED BY		QUANTITIES	BY	CHECKED				
	FIELD CHECKED BY	CHECKED BY								

FOUNDATION PLAN SHEET (ENGLISH) (REV. 03/14/12)

ORIGINAL SCALE IN INCHES FOR REDUCED PLANS 0 1 2 3

UNIT:
PROJECT NUMBER & PHASE: CONTRACT NO.:

DISREGARD PRINTS BEARING EARLIER REVISION DATES →

REVISION DATES					SHEET	OF
x					15	61

FILE => J:\1858_5th_St_BR\517\5th BRIDGE\1858FP03.dgn

USERNAME => untitled DATE PLOTTED => 8/12/2016 TIME PLOTTED => 10:50:03 AM

DIST	COUNTY	ROUTE	POST MILES TOTAL PROJECT	SHEET No	TOTAL SHEETS
03	Sut/Yub	Local			

REGISTERED CIVIL ENGINEER DATE

PLANS APPROVAL DATE

REGISTERED PROFESSIONAL ENGINEER
ROSA GRIGGS
No. 54169
Exp. 12-31-17
CIVIL
STATE OF CALIFORNIA

CITY OF YUBA CITY
1201 CIVIC CENTER BOULEVARD
YUBA CITY, CA 95993

Dokken Engineering
110 Blue Ravine Rd, Suite 200
Folsom, CA 95630 (916) 858-0642

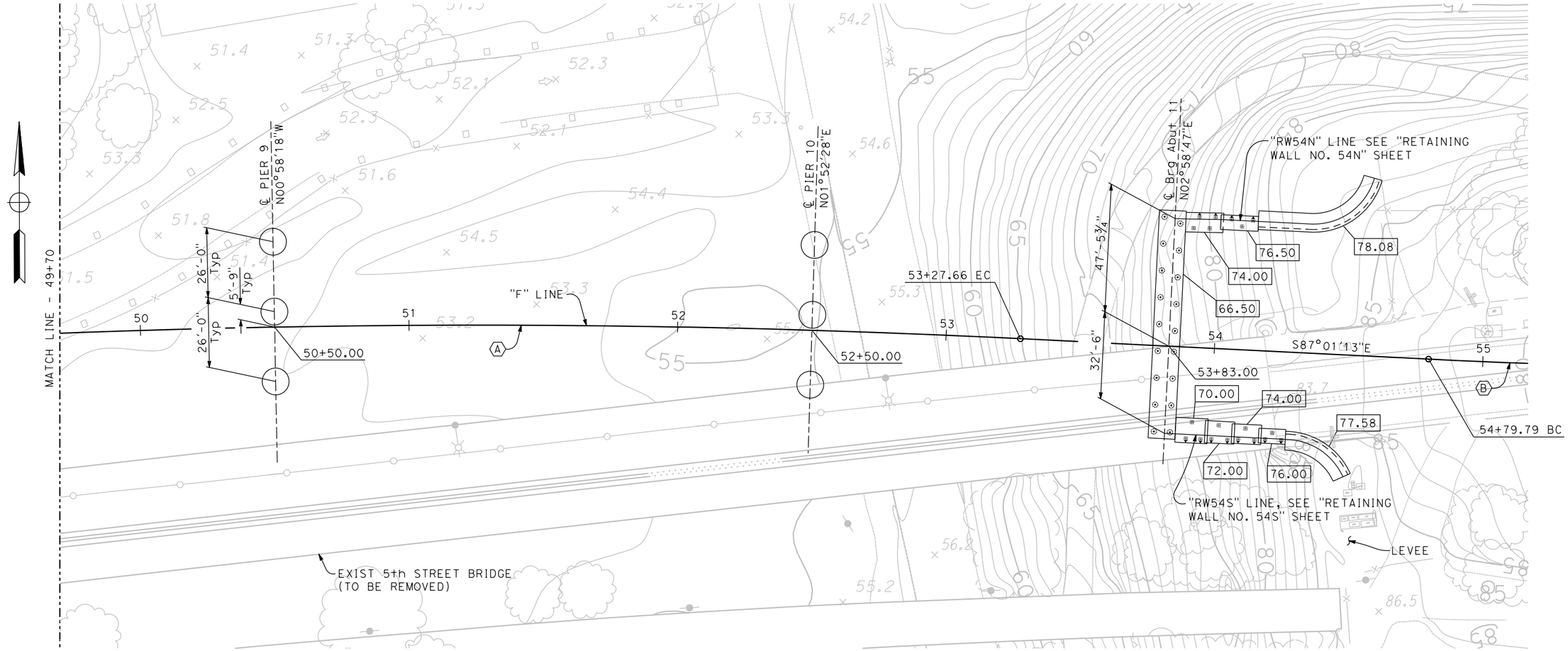

CURVE DATA

(A)	(B)
R = 4026.00′	R = 2673.64′
△ = 27°34′39"	△ = 9°06′01"
T = 988.04′	T = 212.78′
L = 1937.79′	L = 424.66′

PLAN

1" = 20′

LEGEND

- Denotes bottom of footing elev
- Denotes vertical pile. All piles not shown.
- Denotes pile battered 1:3. All piles not shown.

GEOTECHNICAL PROFESSIONAL APPROVAL DATE

DESIGN OVERSIGHT

SIGN OFF DATE

SCALE:	VERT.DATUM NAVD 88	HORZ.DATUM
PHOTOGRAMMETRY AS OF:		ALIGNMENT TIES
SURVEYED BY		DRAFTED BY
FIELD CHECKED BY		CHECKED BY

DESIGN	BY R. Griggs	CHECKED T. Osterkamp
DETAILS	BY K. Dang	CHECKED
QUANTITIES	BY	CHECKED

PREPARED FOR THE STATE OF CALIFORNIA DEPARTMENT OF TRANSPORTATION

T. Osterkamp
PROJECT ENGINEER

BRIDGE NO. 18C-0012
POST MILES

5TH STREET BRIDGE OVER FEATHER RIVER
FOUNDATION PLAN NO. 4

FOUNDATION PLAN SHEET (ENGLISH) (REV. 03/14/12)

ORIGINAL SCALE IN INCHES FOR REDUCED PLANS 0 1 2 3

UNIT:
PROJECT NUMBER & PHASE: CONTRACT NO.:

DISREGARD PRINTS BEARING EARLIER REVISION DATES →

REVISION DATES					SHEET	OF
x					16	61

FILE => J:\1858_5th_St_BR\517\5th BRIDGE\1858FP04.dgn

USERNAME => untitled DATE PLOTTED => 8/12/2016 TIME PLOTTED => 10:50:03 AM

DIST	COUNTY	ROUTE	POST MILES TOTAL PROJECT	SHEET No	TOTAL SHEETS
03	Sut/Yub	Local			

REGISTERED CIVIL ENGINEER DATE

PLANS APPROVAL DATE

REGISTERED PROFESSIONAL ENGINEER — ROSA GRIGGS — No. 54169 — Exp. 12-31-17 — CIVIL — STATE OF CALIFORNIA

CITY OF YUBA CITY
1201 CIVIC CENTER BOULEVARD
YUBA CITY, CA 95993

Dokken Engineering
110 Blue Ravine Rd, Suite 200
Folsom, CA 95630 (916) 858-0642

HYDROLOGIC SUMMARY

DRAINAGE AREA: 4000 square miles

	DESIGN FLOOD	CVFPB FLOOD DESIGN	OVERTOPPING FLOOD
FREQUENCY (Years)	100	200	-
DISCHARGE (Cubic feet per second)	149,058	169,250	-
WATER SURFACE (Elevation at bridge)	74.80'	77.90'	-

Flood plain data are based upon information available when the plans were prepared and are shown to meet Federal requirements. The accuracy of said information is not warranted by the State, County, or consultants and interested or affected parties should make their own investigations.

PILE DATA TABLE

Location	Pile Type	Design Loading	Nominal Resistance		Design Tip Elevation	Specified Tip Elevation
			Compression	Tension		
Abut 1	-	kips	kips	kips	-	-
Pier 2	-	kips	kips	kips	-	-
Pier 3	-	kips	kips	kips	-	-
Pier 4	-	kips	kips	kips	-	-
Pier 5	-	kips	kips	kips	-	-
Pier 6	-	kips	kips	kips	-	-
Pier 7	-	kips	kips	kips	-	-
Pier 8	-	kips	kips	kips	-	-
Pier 9	-	kips	kips	kips	-	-
Pier 10	-	kips	kips	kips	-	-
Abut 11	-	kips	kips	kips	-	-

Pile tip elevation is controlled by the following demands:
(1) Compression; (2) Tension; (3) Lateral Loads.
(4) Scour Potential exist to Elev. _ @ _;
(5) Specified tip elevation shall not be raised.

SCOUR DATA TABLE

Support No.	Long Term (Degradation and Contraction) Scour Elevation (ft)	Short (Local) Scour Depth (ft)
Abut 1	0	0
Pier 2	32.8	8.6
Pier 3	10.6	17.4
Pier 4	43.3	11.4
Pier 5	49.0	9.9
Pier 6	50.4	8.8
Pier 7	48.8	9.6
Pier 8	48.0	10.5
Pier 9	49.9	10.1
Pier 10	50.5	9.9
Abut 11	0	0

GEOTECHNICAL PROFESSIONAL APPROVAL DATE

DESIGN OVERSIGHT

SIGN OFF DATE

SCALE:	VERT.DATUM NAVD 88	HORZ.DATUM			
PHOTOGRAMMETRY AS OF:		ALIGNMENT TIES			
SURVEYED	BY	DRAFTED	BY		
FIELD CHECKED	BY	CHECKED	BY		

DESIGN	BY R. Griggs	CHECKED T. Osterkamp	PREPARED FOR THE STATE OF CALIFORNIA DEPARTMENT OF TRANSPORTATION
DETAILS	BY K. Dang	CHECKED	
QUANTITIES	BY	CHECKED	

T. Osterkamp
PROJECT ENGINEER

BRIDGE NO. 18C-0012
POST MILES

5TH STREET BRIDGE OVER FEATHER RIVER
FOUNDATION PLAN NO. 5

FOUNDATION PLAN SHEET (ENGLISH) (REV. 03/14/12)

ORIGINAL SCALE IN INCHES FOR REDUCED PLANS 0 1 2 3

UNIT:
PROJECT NUMBER & PHASE: CONTRACT NO.:

DISREGARD PRINTS BEARING EARLIER REVISION DATES →

REVISION DATES				SHEET	OF
...X...	.....	.....	.....	17	61

FILE => J:\1858_5th_St_BR\517\5th BRIDGE\1858FP05.dgn

USERNAME => untitled DATE PLOTTED => 8/12/2016 TIME PLOTTED => 10:50:04 AM

DIST	COUNTY	ROUTE	POST MILES TOTAL PROJECT	SHEET No	TOTAL SHEETS
03	Sut/Yub	Local			

REGISTERED CIVIL ENGINEER DATE

PLANS APPROVAL DATE

REGISTERED PROFESSIONAL ENGINEER
ROSA GRIGGS
No. 54169
Exp. 12-31-17
CIVIL
STATE OF CALIFORNIA

CITY OF YUBA CITY
1201 CIVIC CENTER BOULEVARD
YUBA CITY, CA 95993

Dokken Engineering
110 Blue Ravine Rd, Suite 200
Folsom, CA 95630 (916) 858-0642

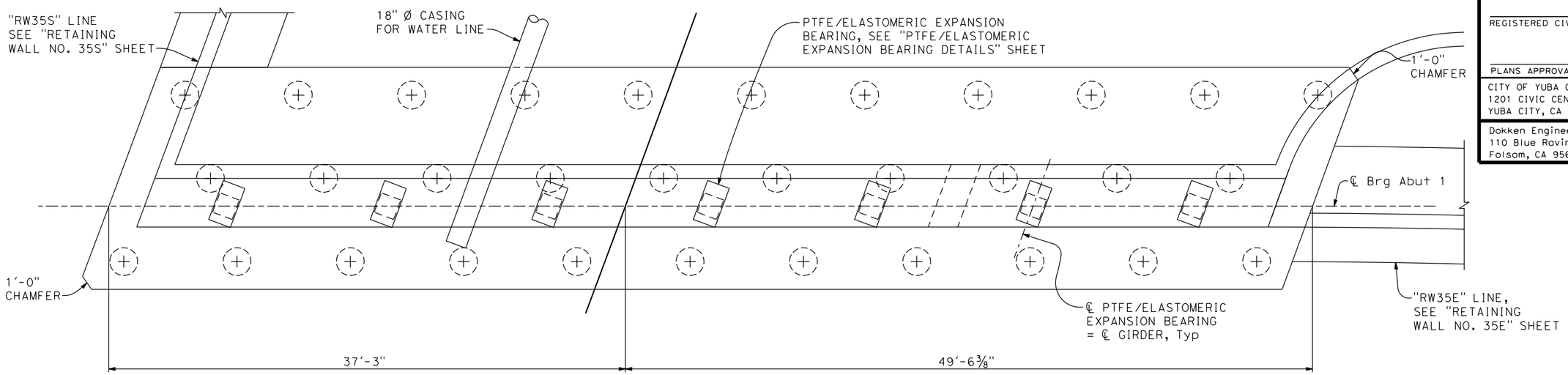

PLAN
1/4" = 1'-0"

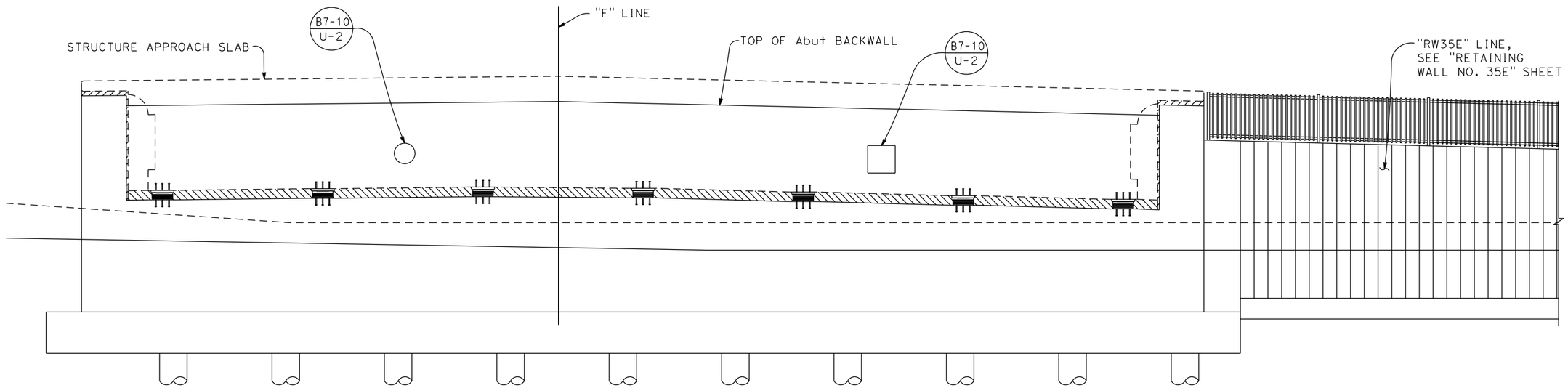

ELEVATION
1/4" = 1'-0"

DESIGN OVERSIGHT		DESIGN	BY R. Griggs	CHECKED T. Osterkamp	PREPARED FOR THE STATE OF CALIFORNIA DEPARTMENT OF TRANSPORTATION	T. Osterkamp PROJECT ENGINEER	BRIDGE NO. 18C-0012
SIGN OFF DATE		DETAILS	BY K. Dang	CHECKED			POST MILES
DESIGN DETAIL SHEET (ENGLISH) (REV.7/16/10)		QUANTITIES	BY	CHECKED			

5TH STREET BRIDGE OVER FEATHER RIVER
ABUTMENT 1 LAYOUT

ORIGINAL SCALE IN INCHES FOR REDUCED PLANS 0 1 2 3

UNIT:
PROJECT NUMBER & PHASE: CONTRACT NO.:

DISREGARD PRINTS BEARING EARLIER REVISION DATES →

REVISION DATES					SHEET	OF
-					18	61

FILE => J:\1858_5th_St_BR\517\5th BRIDGE\1858AL01.dgn

USERNAME => untitled DATE PLOTTED => 8/12/2016 TIME PLOTTED => 10:50:04 AM

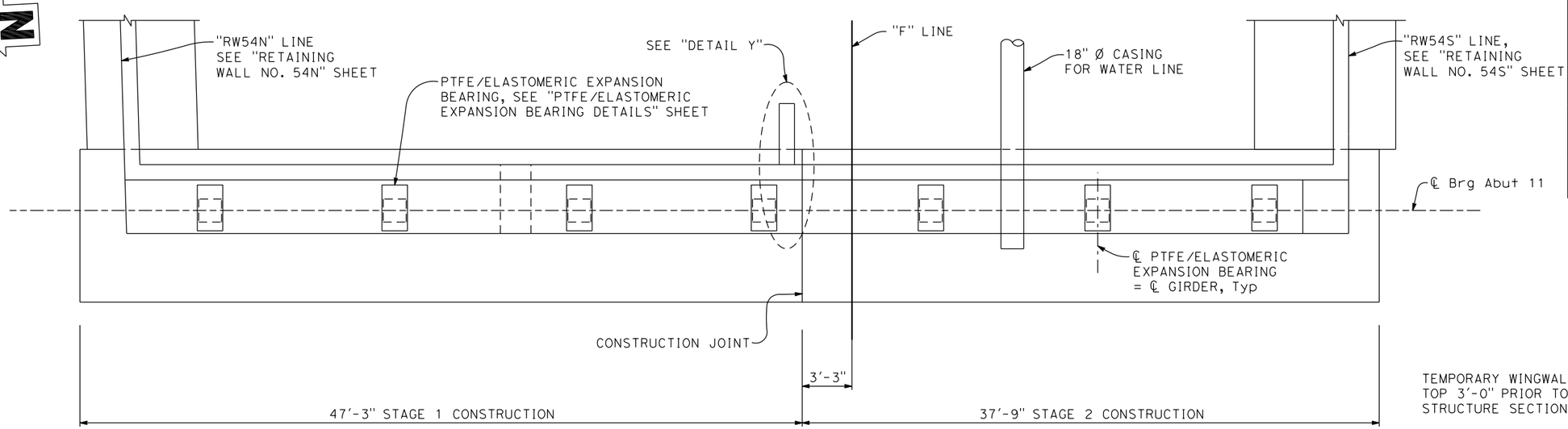

PLAN

1/4" = 1'-0"

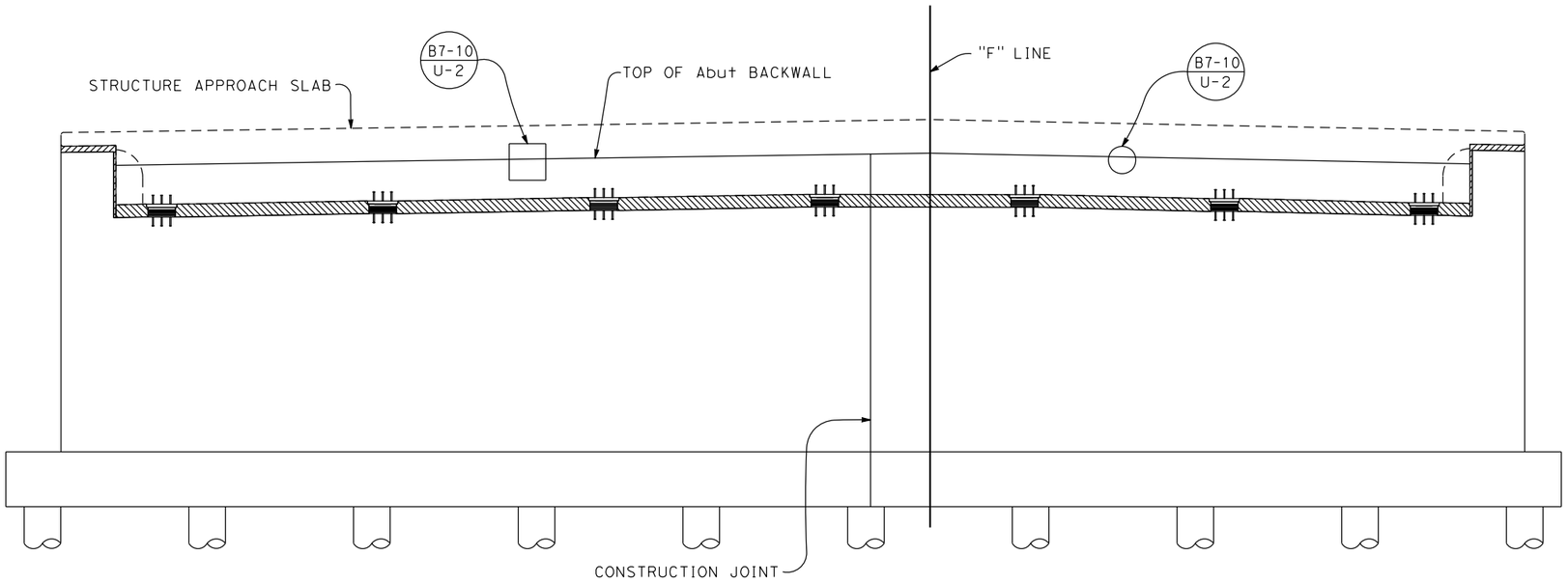

ELEVATION

1/4" = 1'-0"

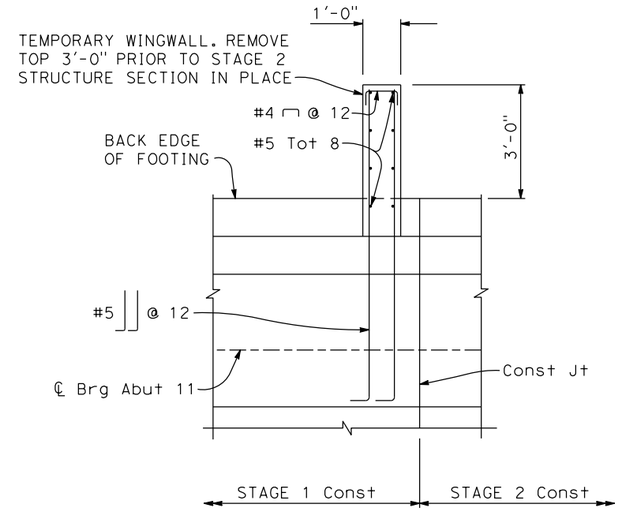

DETAIL Y

1/2" = 1'-0"

DIST	COUNTY	ROUTE	POST MILES TOTAL PROJECT	SHEET No	TOTAL SHEETS
03	Sut/Yub	Local			

REGISTERED CIVIL ENGINEER — DATE

PLANS APPROVAL DATE

REGISTERED PROFESSIONAL ENGINEER — ROSA GRIGGS — No. 54169 — Exp. 12-31-17 — CIVIL — STATE OF CALIFORNIA

CITY OF YUBA CITY
1201 CIVIC CENTER BOULEVARD
YUBA CITY, CA 95993

Dokken Engineering
110 Blue Ravine Rd, Suite 200
Folsom, CA 95630 (916) 858-0642

DESIGN OVERSIGHT

SIGN OFF DATE

DESIGN DETAIL SHEET (ENGLISH) (REV.7/16/10)

	BY	CHECKED
DESIGN	R. Griggs	T. Osterkamp
DETAILS	K. Dang	
QUANTITIES		

PREPARED FOR THE
STATE OF CALIFORNIA
DEPARTMENT OF TRANSPORTATION

ORIGINAL SCALE IN INCHES FOR REDUCED PLANS 0 1 2 3

T. Osterkamp
PROJECT ENGINEER

UNIT:
PROJECT NUMBER & PHASE:
CONTRACT NO.:

BRIDGE NO. 18C-0012
POST MILES

5TH STREET BRIDGE OVER FEATHER RIVER
ABUTMENT 11 LAYOUT

DISREGARD PRINTS BEARING EARLIER REVISION DATES →

REVISION DATES: -

SHEET 19 OF 61

FILE => J:\1858_5th_St_BR\517\5th BRIDGE\1858AL02.dgn

USERNAME => untitled DATE PLOTTED => 8/12/2016 TIME PLOTTED => 10:50:05 AM

DIST	COUNTY	ROUTE	POST MILES TOTAL PROJECT	SHEET No	TOTAL SHEETS
03	Sut/Yub	Local			

REGISTERED CIVIL ENGINEER DATE

PLANS APPROVAL DATE

REGISTERED PROFESSIONAL ENGINEER — ROSA GRIGGS — No. 54169 — Exp. 12-31-17 — CIVIL — STATE OF CALIFORNIA

CITY OF YUBA CITY
1201 CIVIC CENTER BOULEVARD
YUBA CITY, CA 95993

Dokken Engineering
110 Blue Ravine Rd, Suite 200
Folsom, CA 95630 (916) 858-0642

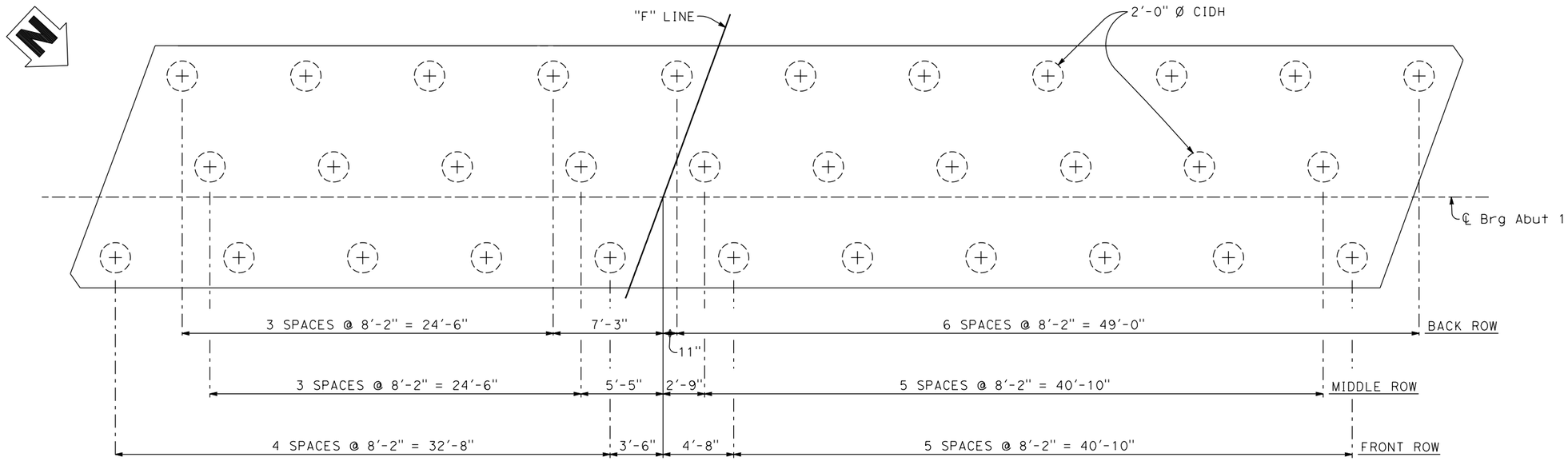

ABUTMENT 1 PILE LAYOUT

1/4" = 1'-0"

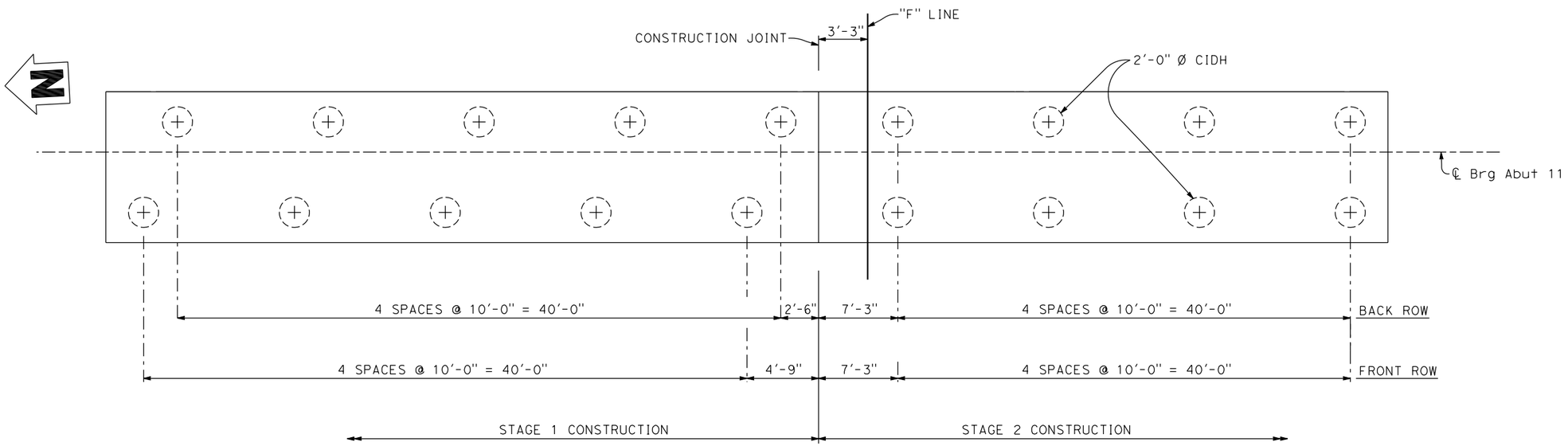

ABUTMENT 11 PILE LAYOUT

1/4" = 1'-0"

DESIGN OVERSIGHT		DESIGN	BY R. Griggs	CHECKED T. Osterkamp	PREPARED FOR THE STATE OF CALIFORNIA DEPARTMENT OF TRANSPORTATION	T. Osterkamp PROJECT ENGINEER	BRIDGE NO. 18C-0012
SIGN OFF DATE		DETAILS	BY K. Dang	CHECKED			POST MILES
DESIGN DETAIL SHEET (ENGLISH) (REV.7/16/10)		QUANTITIES	BY	CHECKED			

5TH STREET BRIDGE OVER FEATHER RIVER
ABUTMENTS PILE LAYOUT

ORIGINAL SCALE IN INCHES FOR REDUCED PLANS 0 1 2 3

UNIT:
PROJECT NUMBER & PHASE: CONTRACT NO.:

DISREGARD PRINTS BEARING EARLIER REVISION DATES →

REVISION DATES				SHEET	OF
-				20	61

FILE => J:\1858_5th_St_BR\517\5th BRIDGE\1858AD01.dgn

USERNAME => untitled DATE PLOTTED => 8/12/2016 TIME PLOTTED => 10:50:05 AM

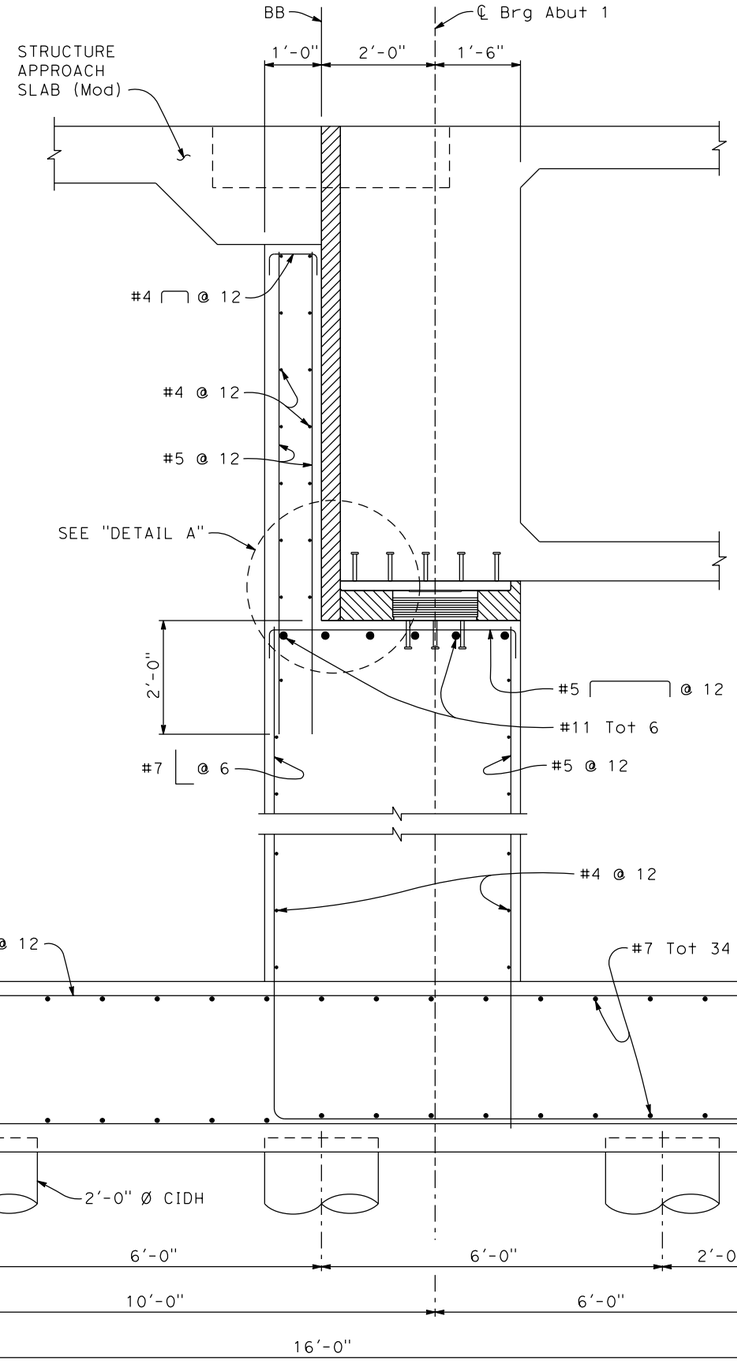

ABUTMENT 1 SECTION

3/4" = 1'-0"

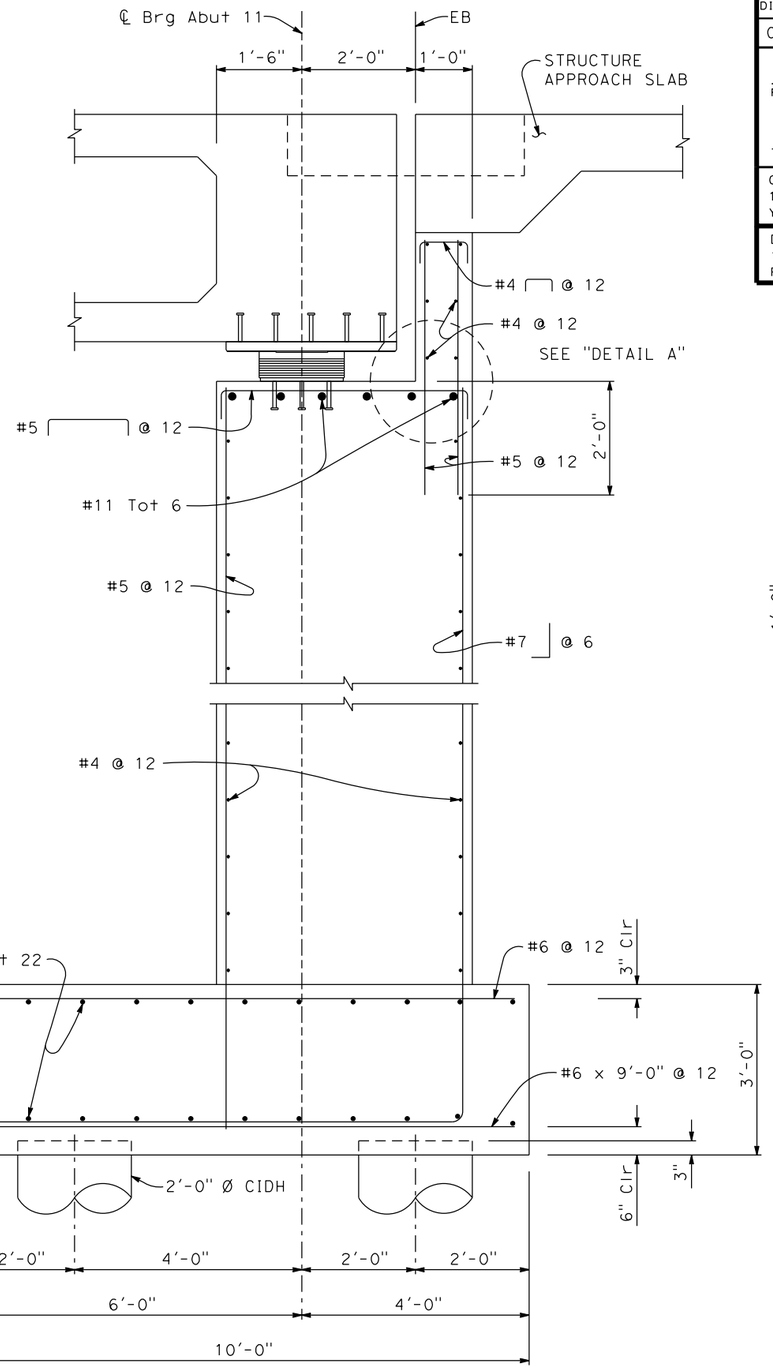

ABUTMENT 11 SECTION

3/4" = 1'-0"

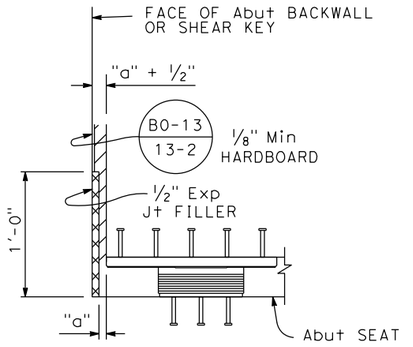

DETAIL A

NO SCALE

DIST	COUNTY	ROUTE	POST MILES TOTAL PROJECT	SHEET No	TOTAL SHEETS
03	Sut/Yub	Local			

REGISTERED CIVIL ENGINEER DATE

PLANS APPROVAL DATE

REGISTERED PROFESSIONAL ENGINEER — ROSA GRIGGS — No. 54169 — Exp. 12-31-17 — CIVIL — STATE OF CALIFORNIA

CITY OF YUBA CITY
1201 CIVIC CENTER BOULEVARD
YUBA CITY, CA 95993

Dokken Engineering
110 Blue Ravine Rd, Suite 200
Folsom, CA 95630 (916) 858-0642

DESIGN OVERSIGHT

SIGN OFF DATE

	BY	CHECKED
DESIGN	R. Griggs	T. Osterkamp
DETAILS	K. Dang	CHECKED
QUANTITIES	BY	CHECKED

PREPARED FOR THE STATE OF CALIFORNIA DEPARTMENT OF TRANSPORTATION

T. Osterkamp
PROJECT ENGINEER

BRIDGE NO. 18C-0012
POST MILES

5TH STREET BRIDGE OVER FEATHER RIVER
ABUTMENT DETAILS NO. 1

DESIGN DETAIL SHEET (ENGLISH) (REV.7/16/10)

ORIGINAL SCALE IN INCHES FOR REDUCED PLANS 0 1 2 3

UNIT:
PROJECT NUMBER & PHASE: CONTRACT NO.:

DISREGARD PRINTS BEARING EARLIER REVISION DATES →

REVISION DATES				SHEET	OF
-				21	61

FILE => J:\1858_5th_St_BR\517\5th BRIDGE\1858AD02.dgn

USERNAME => untitled DATE PLOTTED => 8/12/2016 TIME PLOTTED => 10:50:06 AM

DIST	COUNTY	ROUTE	POST MILES TOTAL PROJECT	SHEET No	TOTAL SHEETS
03	Sut/Yub	Local			

REGISTERED CIVIL ENGINEER DATE

PLANS APPROVAL DATE

REGISTERED PROFESSIONAL ENGINEER — ROSA GRIGGS — No. 54169 — Exp. 12-31-17 — CIVIL — STATE OF CALIFORNIA

CITY OF YUBA CITY
1201 CIVIC CENTER BOULEVARD
YUBA CITY, CA 95993

Dokken Engineering
110 Blue Ravine Rd, Suite 200
Folsom, CA 95630 (916) 858-0642

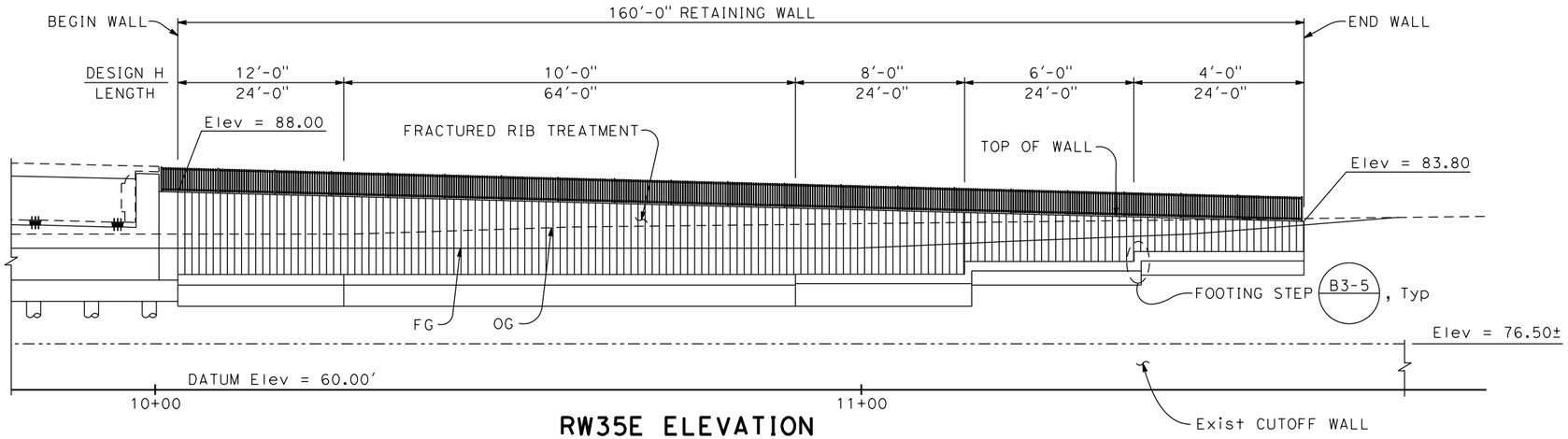

RW35E ELEVATION

1" = 10'

LEGEND

XX.XX DENOTES BOTTOM OF FOOTING ELEVATION

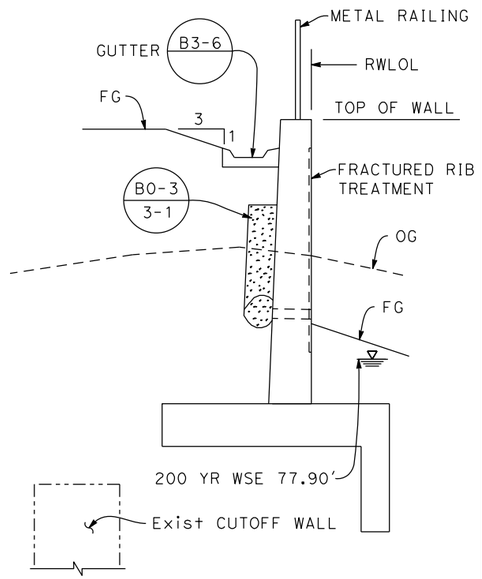

TYPICAL SECTION

1" = 10'

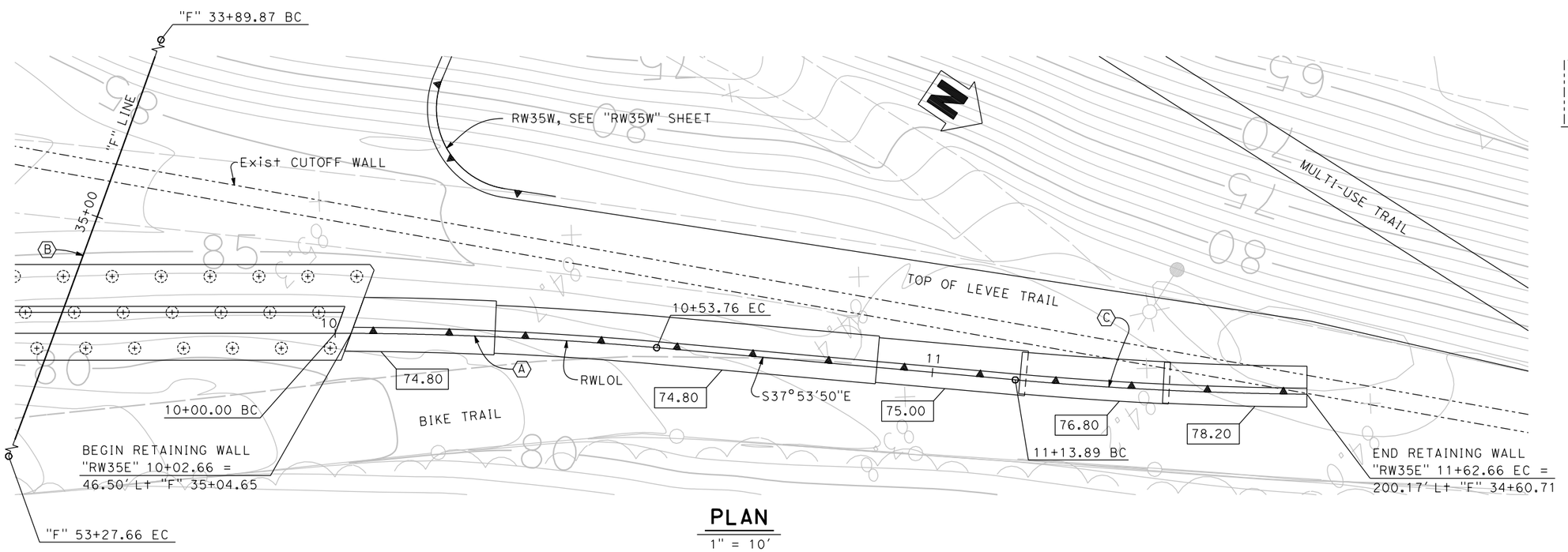

PLAN

1" = 10'

CURVE DATA

Ⓐ	Ⓑ	Ⓒ
R = 600.00'	R = 4026.00'	R = 600.00'
△ = 5°08'00"	△ = 27°34'39"	△ = 4°39'24"
T = 26.90'	T = 988.04'	T = 24.40'
L = 53.76'	L = 1937.79'	L = 48.76'

DESIGN OVERSIGHT		DESIGN	BY M. Maechler	CHECKED T. Osterkamp	PREPARED FOR THE STATE OF CALIFORNIA DEPARTMENT OF TRANSPORTATION
SIGN OFF DATE		DETAILS	BY K. Dang	CHECKED	T. Osterkamp PROJECT ENGINEER
		QUANTITIES	BY	CHECKED	BRIDGE NO. 18C-0012 POST MILES

5TH STREET BRIDGE OVER FEATHER RIVER
RETAINING WALL No. 35E LAYOUT

DESIGN DETAIL SHEET (ENGLISH) (REV.7/16/10)

ORIGINAL SCALE IN INCHES FOR REDUCED PLANS 0 1 2 3

UNIT:
PROJECT NUMBER & PHASE: CONTRACT NO.:

DISREGARD PRINTS BEARING EARLIER REVISION DATES →

REVISION DATES				SHEET	OF
-				22	61

FILE => J:\1858_5th_St_BR\517\5th BRIDGE\1858_RW35_GP01.dgn

USERNAME => untitled DATE PLOTTED => 8/12/2016 TIME PLOTTED => 10:50:07 AM

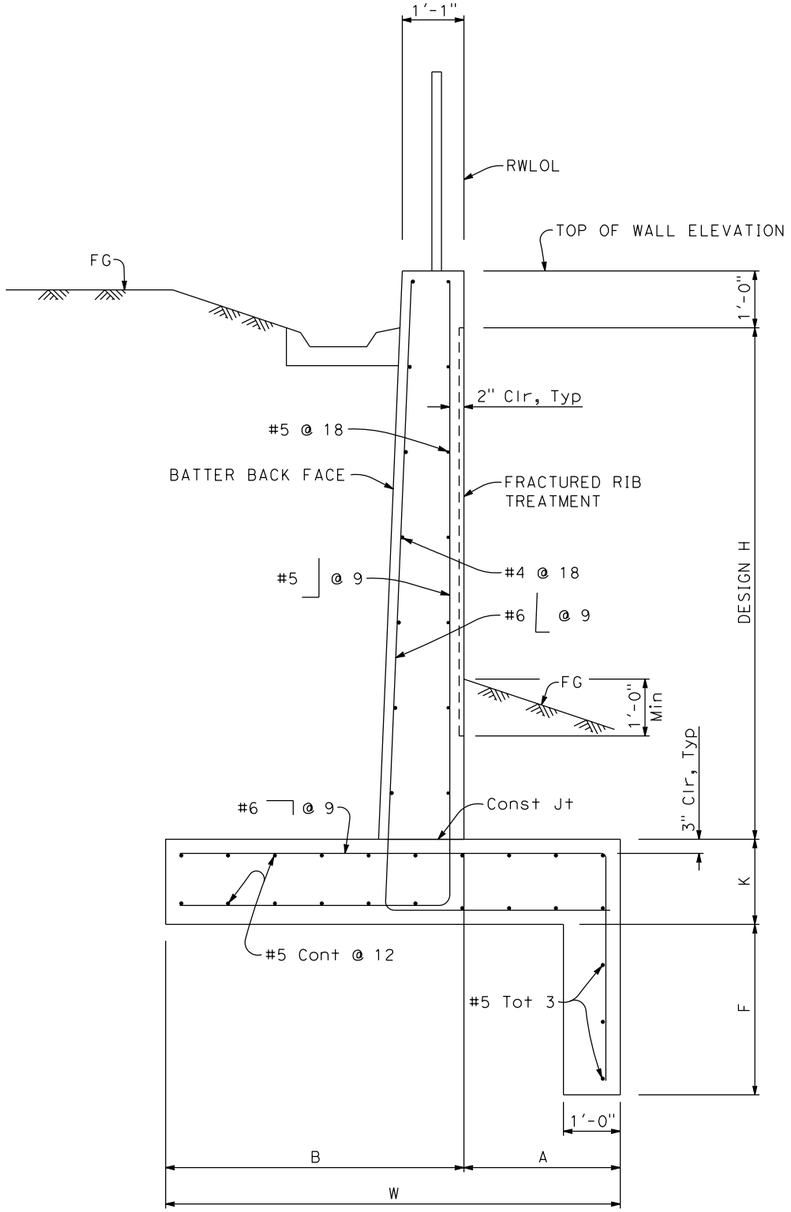

TYPICAL SECTION

1" = 10'

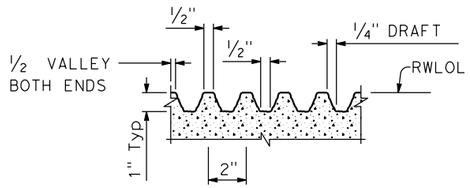

FRACTURED RIB TEXTURE

3" = 1'-0"

TABLE OF DIMENSIONS					
DESIGN H	4'	6'	8'	10'	12'
W	6'-10"	7'-0"	7'-6"	8'-0"	9'-0"
A	2'-2"	2'-3"	2'-6"	2'-9"	3'-0"
B	4'-8"	4'-9"	5'-0"	5'-3"	6'-0"
F	1'-4"	1'-4"	1'-4"	1'-6"	1'-6"
K	2'-0"	2'-0"	3'-0"	3'-0"	3'-0"
BATTER	1/2: 12	1/2: 12	1/2: 12	1/2: 12	1/2: 12

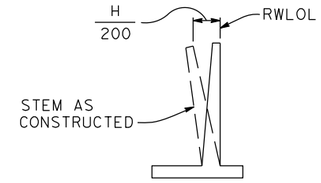

APPROXIMATE WALL OFFSET VALUES

NO SCALE

Values for offseting forms to be determined by the Engineer.

DIST	COUNTY	ROUTE	POST MILES TOTAL PROJECT	SHEET No	TOTAL SHEETS
03	Sut/Yub	Local			

REGISTERED CIVIL ENGINEER DATE

PLANS APPROVAL DATE

REGISTERED PROFESSIONAL ENGINEER — ROSA GRIGGS — No. 54169 — Exp. 12-31-17 — CIVIL — STATE OF CALIFORNIA

CITY OF YUBA CITY
1201 CIVIC CENTER BOULEVARD
YUBA CITY, CA 95993

Dokken Engineering
110 Blue Ravine Rd, Suite 200
Folsom, CA 95630 (916) 858-0642

DESIGN CONDITIONS:

Design "H" may be exceeded by 6" before going to the next size.

Return wall not required unless shown elsewhere

DESIGN NOTES:

DESIGN: AASHTO LRFD Bridge Design Specifications, 4th edition with California Amendments and U.S.A.C.O.E Enginering Manual 1110-2-2502

LIVE LOAD: Surcharge on level ground surface

SEISMIC: $k_h = 0.2$, $k_v = 0.0$

SOIL: $\phi = 34°$
$\gamma = 120$ pcf

REINFORCED CONCRETE: $f_y = 60{,}000$ psi
$f_c' = 3{,}600$ psi

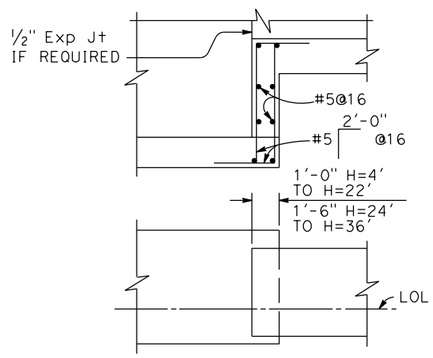

FOOTING STEP

NO SCALE

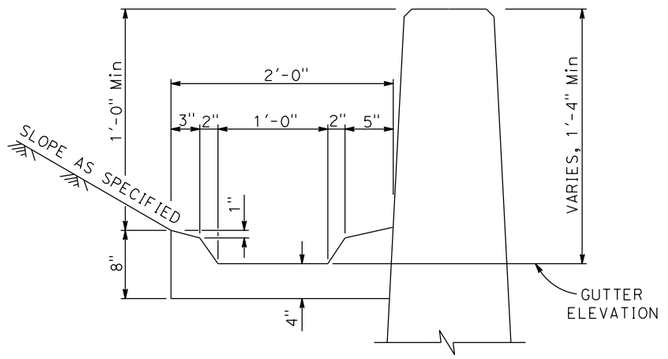

TYPICAL GUTTER DETAIL

NO SCALE

DESIGN OVERSIGHT

SIGN OFF DATE

	BY	CHECKED
DESIGN	M. Maechler	T. Osterkamp
DETAILS	K. Dang	CHECKED
QUANTITIES		CHECKED

PREPARED FOR THE STATE OF CALIFORNIA DEPARTMENT OF TRANSPORTATION

T. Osterkamp
PROJECT ENGINEER

BRIDGE NO. 18C-0012
POST MILES

5TH STREET BRIDGE OVER FEATHER RIVER
RETAINING WALL No. 35E DETAILS NO. 1

DESIGN DETAIL SHEET (ENGLISH) (REV.7/16/10)

ORIGINAL SCALE IN INCHES FOR REDUCED PLANS 0 1 2 3

UNIT:
PROJECT NUMBER & PHASE: CONTRACT NO.:

DISREGARD PRINTS BEARING EARLIER REVISION DATES →

REVISION DATES					SHEET	OF
-					23	61

FILE => J:\1858_5th_St_BR\517\5th BRIDGE\1858_RW35_DT01.dgn

USERNAME => unfitted DATE PLOTTED => 8/12/2016 TIME PLOTTED => 10:50:07 AM

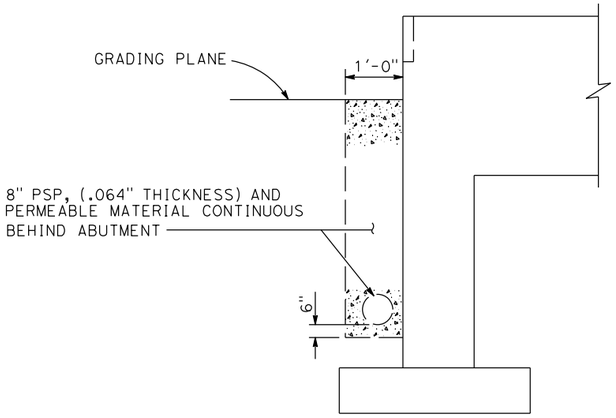

BRIDGE DETAIL 3-5

8" PSP AND PERMEABLE MATERIAL

NO SCALE

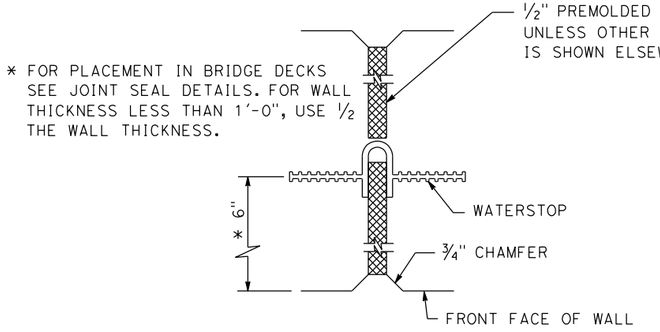

BRIDGE DETAIL 3-4

WALL EXPANSION JOINT

NO SCALE

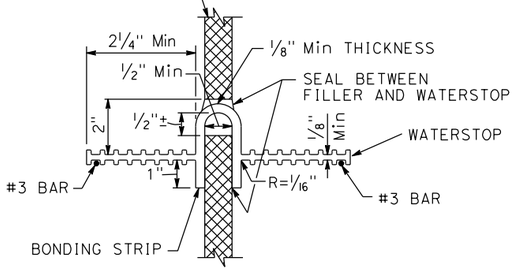

BRIDGE DETAIL 3-6

WATERSTOP

NO SCALE

DIST	COUNTY	ROUTE	POST MILES TOTAL PROJECT	SHEET No	TOTAL SHEETS
03	Sut/Yub	Local			

REGISTERED CIVIL ENGINEER DATE

PLANS APPROVAL DATE

REGISTERED PROFESSIONAL ENGINEER — ROSA GRIGGS — No. 54169 — Exp. 12-31-17 — CIVIL — STATE OF CALIFORNIA

CITY OF YUBA CITY
1201 CIVIC CENTER BOULEVARD
YUBA CITY, CA 95993

Dokken Engineering
110 Blue Ravine Rd, Suite 200
Folsom, CA 95630 (916) 858-0642

NOTES:

1. Holes will be permitted in the outer ½" of the web for wire, rings, etc. Tie web to #3 reinforcing bars @ 12 maximum intervals to support the waterstop in proper position during concrete placement. Alternative detail may be submitted for approval of the Engineer.
2. Waterstop to have 5 or more pairs of raised ribs to provide 0.1 square inch minimum rib cross-section area on each half of the waterstop.

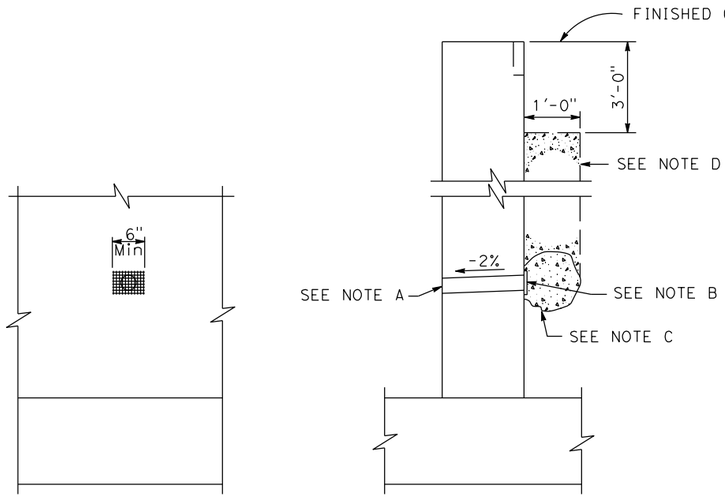

ELEVATION SECTION

BRIDGE DETAIL 3-1

WEEP HOLE AND PERVIOUS BACKFILL

NO SCALE

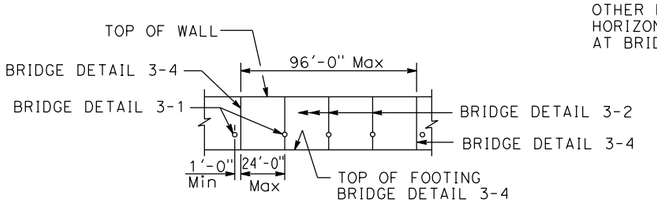

BRIDGE DETAIL 3-3

WALL EXPANSION JOINTS AND WEAKENED PLANES

NO SCALE

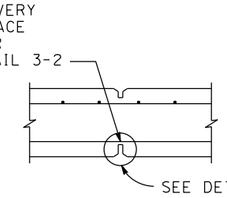

SECTION

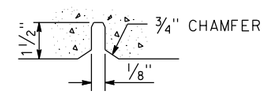

DETAIL A

BRIDGE DETAIL 3-2

WEAKENED PLANES

NO SCALE

NOTES:

A. 4" ø Drains @ 10'-0" maximum center to center, 9'-0" center to center for Type 3 and 9'-3" center to center for Type 4 retaining walls. For walls adjacent to sidewalks or curbs, provide 4" plastic pipe under the sidewalk to discharge thru curb face. Exposed wall drains shall be located 3"± above finished grade.

B. 6" square aluminum or galvanized steel wire ¼" mesh hardware cloth, minimum wire diameter 0.025". Anchor firmly to backface.

C. One cubic foot pervious backfill material in a nonwoven filter fabric, securely tied.

D. Pervious backfill material continuous behind retaining wall or abutment.

DESIGN OVERSIGHT

SIGN OFF DATE

	BY	CHECKED
DESIGN	M. Maechler	T. Osterkamp
DETAILS	K. Dang	
QUANTITIES		

PREPARED FOR THE STATE OF CALIFORNIA DEPARTMENT OF TRANSPORTATION

T. Osterkamp
PROJECT ENGINEER

BRIDGE NO. 18C-0012
POST MILES

5TH STREET BRIDGE OVER FEATHER RIVER
RETAINING WALL No. 35E DETAILS NO. 2

DESIGN DETAIL SHEET (ENGLISH) (REV.7/16/10)

ORIGINAL SCALE IN INCHES FOR REDUCED PLANS 0 1 2 3

UNIT:
PROJECT NUMBER & PHASE:
CONTRACT NO.:

DISREGARD PRINTS BEARING EARLIER REVISION DATES →

REVISION DATES				SHEET	OF
-				24	61

FILE => J:\1858_5th_St_BR\517\5th BRIDGE\1858_RW35_DT02.dgn

USERNAME => untitled DATE PLOTTED => 8/12/2016 TIME PLOTTED => 10:50:08 AM

DIST	COUNTY	ROUTE	POST MILES TOTAL PROJECT	SHEET No	TOTAL SHEETS
03	Sut/Yub	Local			

REGISTERED CIVIL ENGINEER DATE

PLANS APPROVAL DATE

REGISTERED PROFESSIONAL ENGINEER — ROSA GRIGGS — No. 54169 — Exp. 12-31-17 — CIVIL — STATE OF CALIFORNIA

CITY OF YUBA CITY
1201 CIVIC CENTER BOULEVARD
YUBA CITY, CA 95993

Dokken Engineering
110 Blue Ravine Rd, Suite 200
Folsom, CA 95630 (916) 858-0642

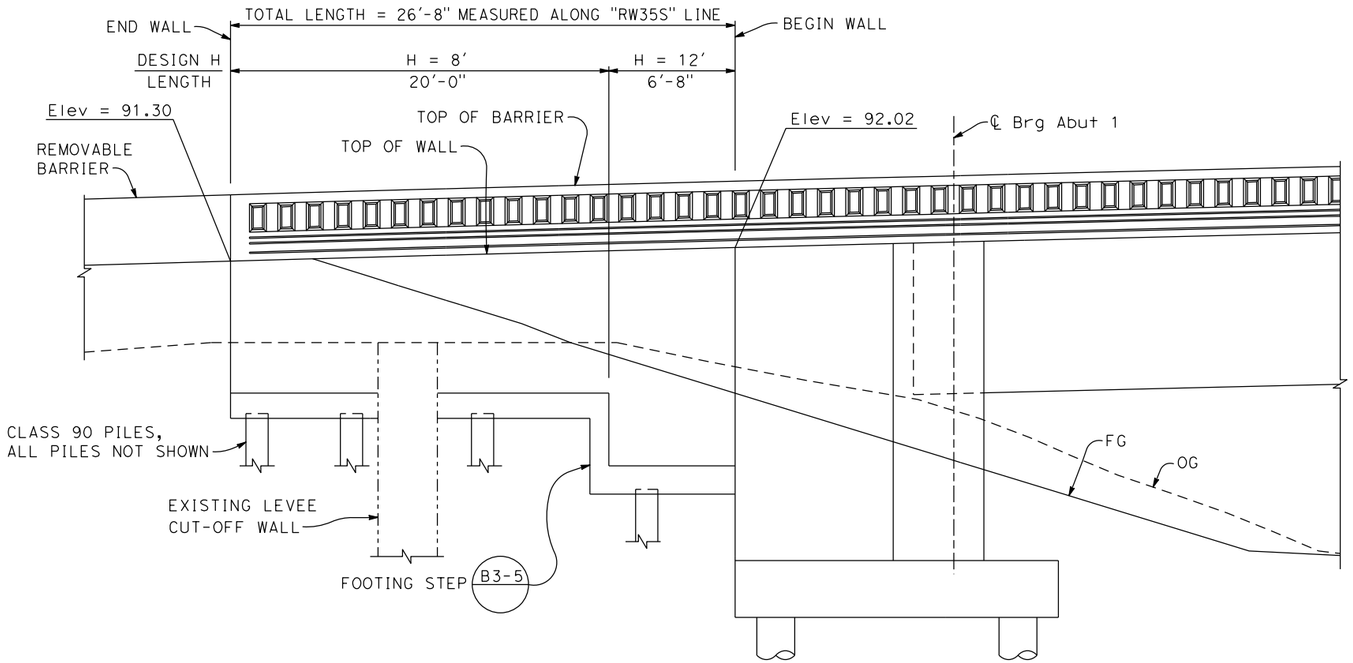

LEGEND:

Denotes vertical pile

Denotes pile battered 1:3

ELEVATION

1/4" = 1'-0"

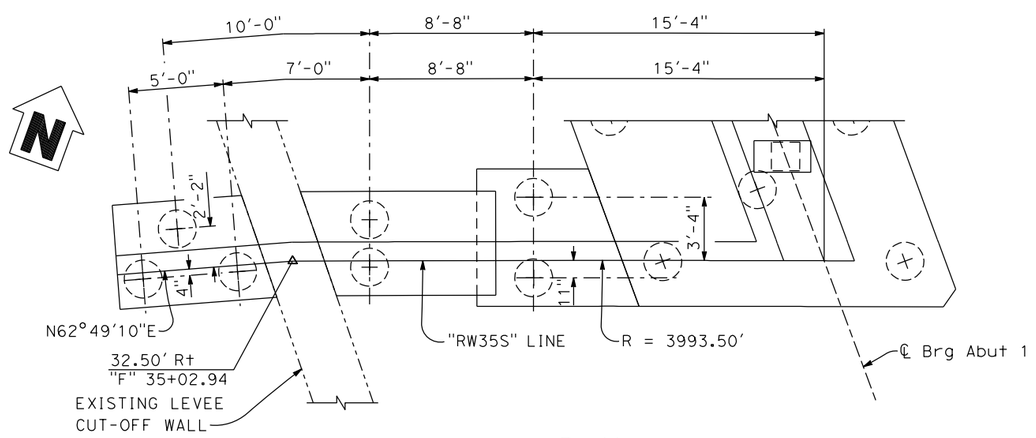

PLAN

1/4" = 1'-0"

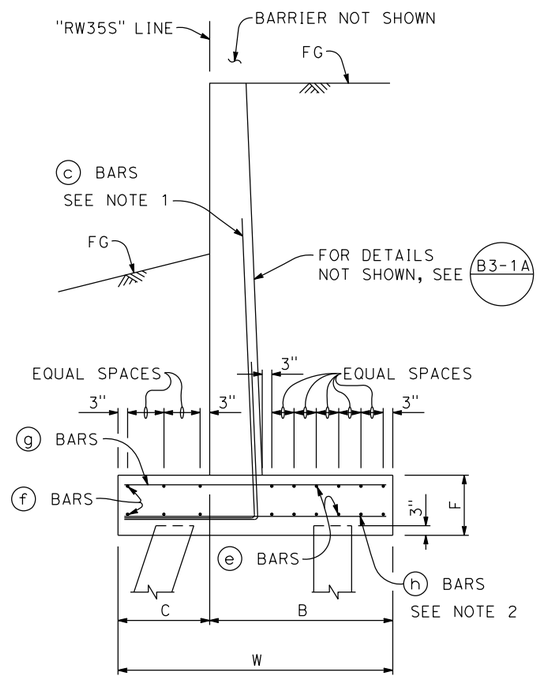

TYPICAL WALL SECTION

NO SCALE

FOOTING DIMENSIONS		
DESIGN H	8'	12'
W	5'-6"	7'-3"
C	1'-10"	2'-5"
B	3'-8"	4'-10"
F	1'-7"	1'-7"
TOTAL ⓔ BARS	6-#5	12-#6
TOTAL ⓕ BARS	6-#5	6-#6
ⓖ BARS	#5 @ 9	#6 @ 9
ⓗ BARS	#5 @ 9	#5 @ 9

GENERAL NOTES:

1. All ⓒ bars shall extend to the toe of the footing.
2. Bundle ⓗ bars with ⓒ bars.

DESIGN OVERSIGHT

SIGN OFF DATE

	BY	CHECKED
DESIGN	R. Griggs	T. Osterkamp
DETAILS	K. Dang	
QUANTITIES		

PREPARED FOR THE STATE OF CALIFORNIA DEPARTMENT OF TRANSPORTATION

T. Osterkamp
PROJECT ENGINEER

BRIDGE NO. 18C-0012
POST MILES

5TH STREET BRIDGE OVER FEATHER RIVER
RETAINING WALL NO. 35S

DESIGN DETAIL SHEET (ENGLISH) (REV.7/16/10)

ORIGINAL SCALE IN INCHES FOR REDUCED PLANS 0 1 2 3

UNIT:
PROJECT NUMBER & PHASE:
CONTRACT NO.:

DISREGARD PRINTS BEARING EARLIER REVISION DATES →

REVISION DATES

SHEET 25 OF 61

FILE => J:\1858_5th_St_BR\517\5th BRIDGE\1858AD06.dgn

USERNAME => untitled DATE PLOTTED => 8/12/2016 TIME PLOTTED => 10:50:08 AM

DIST	COUNTY	ROUTE	POST MILES TOTAL PROJECT	SHEET No	TOTAL SHEETS
03	Sut/Yub	Local			

REGISTERED CIVIL ENGINEER — DATE

PLANS APPROVAL DATE

REGISTERED PROFESSIONAL ENGINEER — ROSA GRIGGS — No. 54169 — Exp. 12-31-17 — CIVIL — STATE OF CALIFORNIA

CITY OF YUBA CITY
1201 CIVIC CENTER BOULEVARD
YUBA CITY, CA 95993

Dokken Engineering
110 Blue Ravine Rd, Suite 200
Folsom, CA 95630 (916) 858-0642

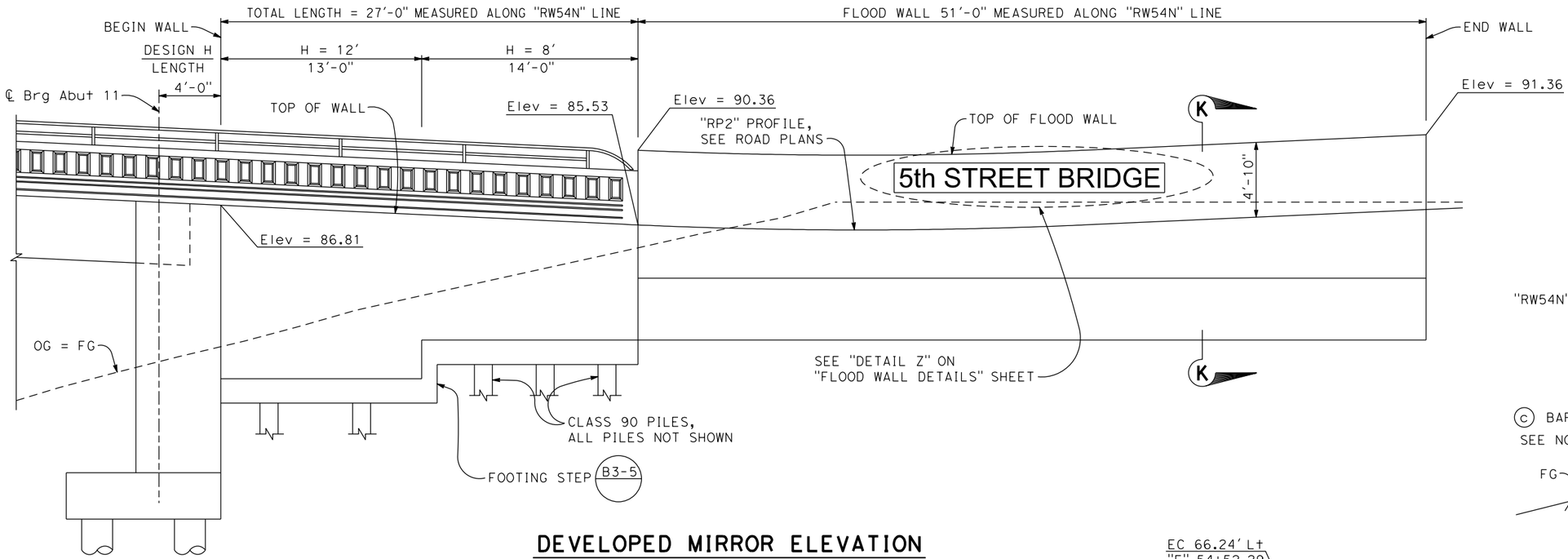

DEVELOPED MIRROR ELEVATION

1/4" = 1'-0"

LEGEND:

- Denotes vertical pile
- Denotes pile battered 1:3

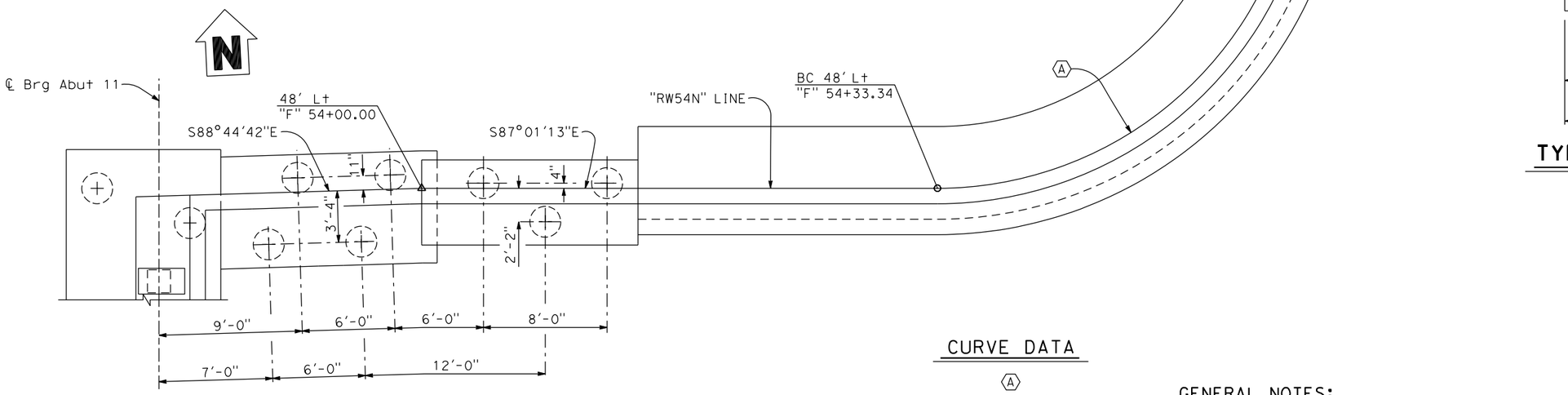

NOTE:

For "SECTION K-K" SEE "FLOOD WALL DETAILS" sheet.

PLAN

1/4" = 1'-0"

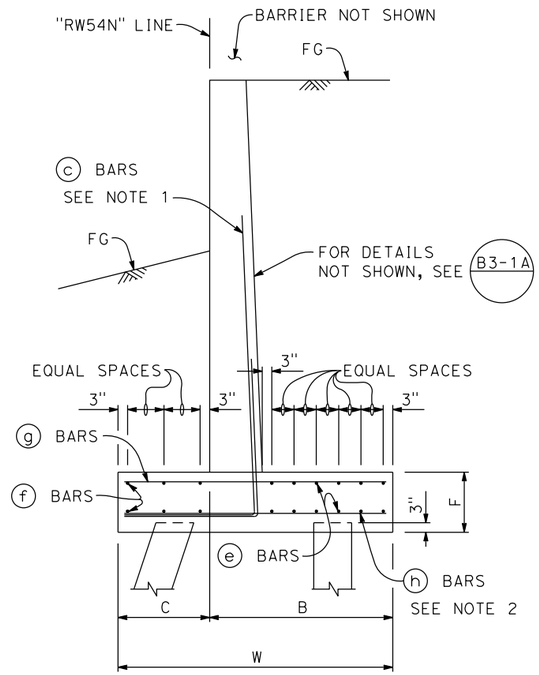

TYPICAL WALL SECTION

NO SCALE

CURVE DATA

A
R = 23.50'
△ = 77°04'59"
T = 18.72'
L = 31.62'

GENERAL NOTES:

1. All (c) bars shall extend to the toe of the footing.
2. Bundle (h) bars with (c) bars.

FOOTING DIMENSIONS		
DESIGN H	8'	12'
W	5'-6"	7'-3"
C	1'-10"	2'-5"
B	3'-8"	4'-10"
F	1'-7"	1'-7"
TOTAL (e) BARS	6-#5	12-#6
TOTAL (f) BARS	6-#5	6-#6
(g) BARS	#5 @ 9	#6 @ 9
(h) BARS	#5 @ 9	#5 @ 9

DESIGN	BY R. Griggs	CHECKED T. Osterkamp	PREPARED FOR THE STATE OF CALIFORNIA DEPARTMENT OF TRANSPORTATION
DETAILS	BY K. Dang	CHECKED	
QUANTITIES	BY	CHECKED	

DESIGN OVERSIGHT

SIGN OFF DATE

T. Osterkamp
PROJECT ENGINEER

BRIDGE NO. 18C-0012
POST MILES

5TH STREET BRIDGE OVER FEATHER RIVER
RETAINING WALL NO. 54N

DESIGN DETAIL SHEET (ENGLISH) (REV.7/16/10)

ORIGINAL SCALE IN INCHES FOR REDUCED PLANS 0 1 2 3

UNIT:
PROJECT NUMBER & PHASE:
CONTRACT NO.:

DISREGARD PRINTS BEARING EARLIER REVISION DATES →

REVISION DATES				SHEET	OF
-				26	61

FILE => J:\1858_5th_St_BR\517\5th BRIDGE\1858AD07.dgn

USERNAME => untitled DATE PLOTTED => 8/12/2016 TIME PLOTTED => 10:50:09 AM

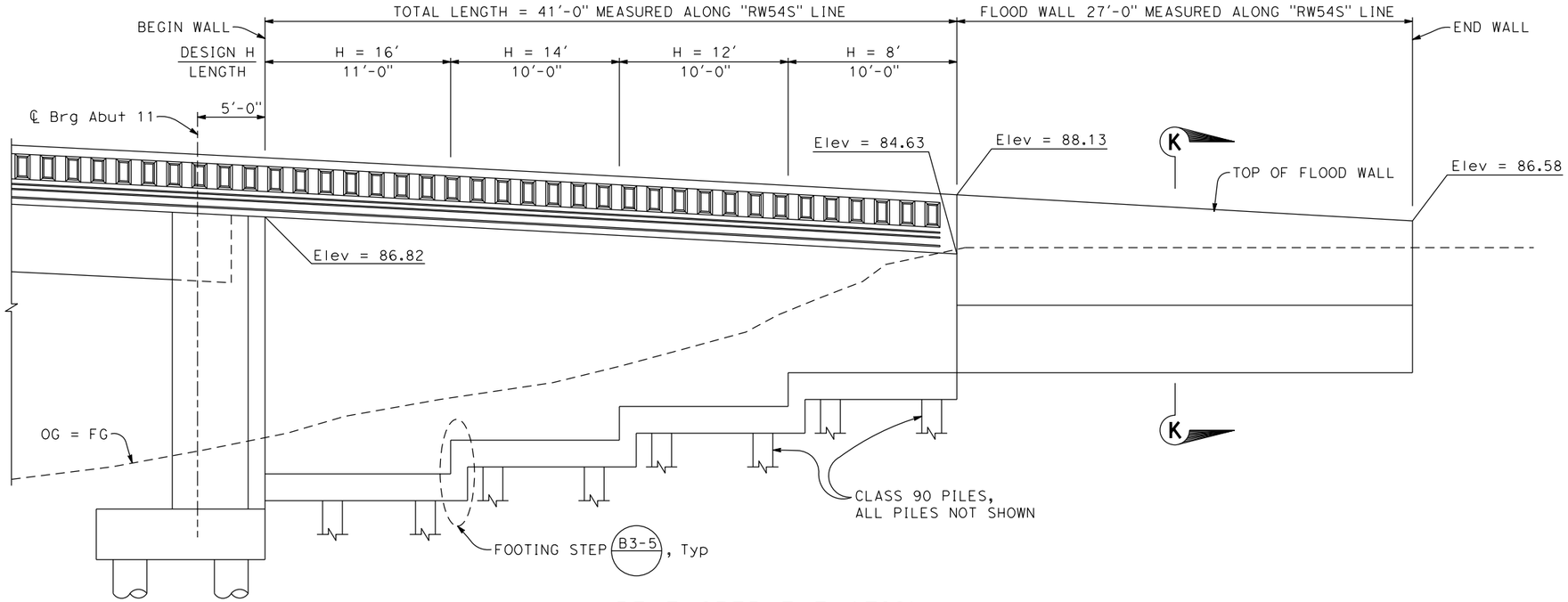

DEVELOPED ELEVATION

1/4" = 1'-0"

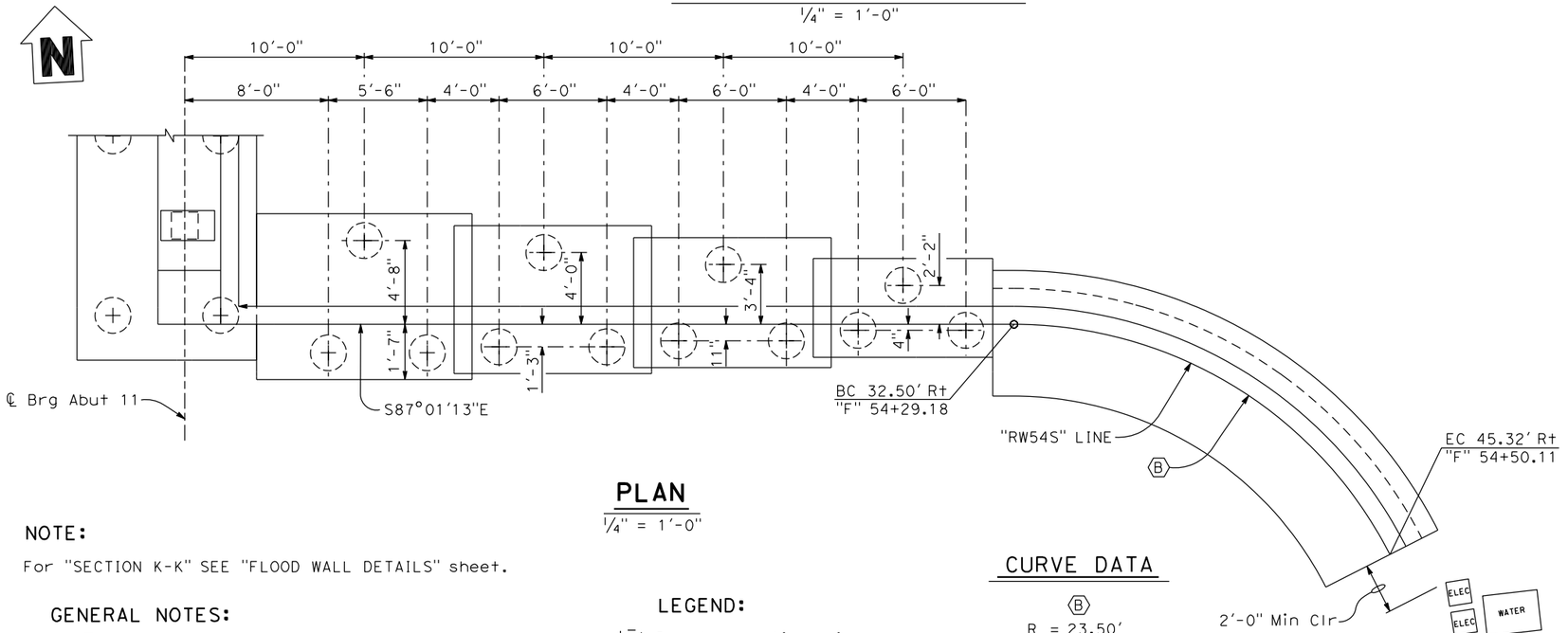

PLAN

1/4" = 1'-0"

NOTE:

For "SECTION K-K" SEE "FLOOD WALL DETAILS" sheet.

GENERAL NOTES:

1. All ⓒ bars shall extend to the toe of the footing.
2. Bundle ⓗ bars with ⓒ bars.

LEGEND:

Denotes vertical pile

Denotes pile battered 1:3

CURVE DATA

Ⓑ

R = 23.50'
△ = 62°58'51"
T = 14.40'
L = 25.83'

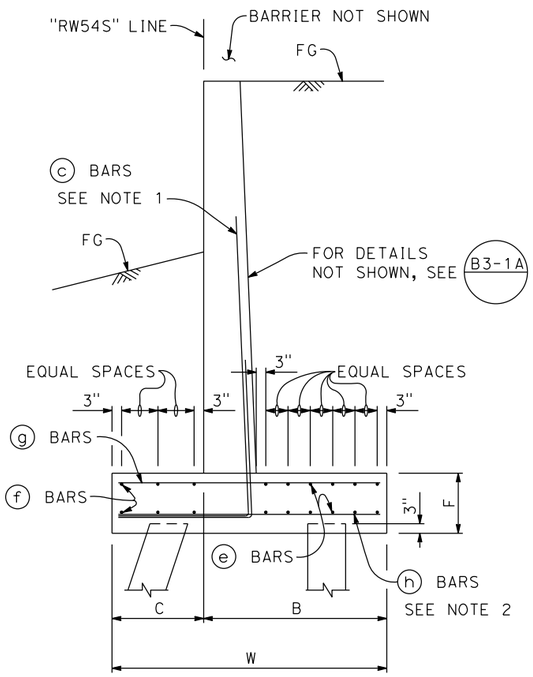

TYPICAL WALL SECTION

NO SCALE

FOOTING DIMENSIONS					
DESIGN H	8'	10'	12'	14'	16'
W	5'-6"	6'-3"	7'-3"	8'-3"	9'-3"
C	1'-10"	2'-1"	2'-5"	2'-9"	3'-1"
B	3'-8"	4'-2"	4'-10"	5'-6"	6'-2"
F	1'-7"	1'-7"	1'-7"	1'-11"	1'-11"
TOTAL ⓔ BARS	6-#5	10-#6	12-#6	8-#6	10-#6
TOTAL ⓕ BARS	6-#5	6-#5	6-#6	8-#6	8-#6
ⓖ BARS	#5 @ 9	#6 @ 9	#6 @ 9	#6 @ 7	#6 @ 6
ⓗ BARS	#5 @ 9	#5 @ 9	#5 @ 9	#5 @ 7	#5 @ 6

DIST	COUNTY	ROUTE	POST MILES TOTAL PROJECT	SHEET No	TOTAL SHEETS
03	Sut/Yub	Local			

REGISTERED CIVIL ENGINEER — DATE

PLANS APPROVAL DATE

REGISTERED PROFESSIONAL ENGINEER — ROSA GRIGGS — No. 54169 — Exp. 12-31-17 — CIVIL — STATE OF CALIFORNIA

CITY OF YUBA CITY
1201 CIVIC CENTER BOULEVARD
YUBA CITY, CA 95993

Dokken Engineering
110 Blue Ravine Rd, Suite 200
Folsom, CA 95630 (916) 858-0642

DESIGN OVERSIGHT

SIGN OFF DATE

	BY	CHECKED
DESIGN	R. Griggs	T. Osterkamp
DETAILS	K. Dang	CHECKED
QUANTITIES	BY	CHECKED

PREPARED FOR THE STATE OF CALIFORNIA DEPARTMENT OF TRANSPORTATION

T. Osterkamp
PROJECT ENGINEER

BRIDGE NO. 18C-0012
POST MILES

5TH STREET BRIDGE OVER FEATHER RIVER
RETAINING WALL NO. 54S

DESIGN DETAIL SHEET (ENGLISH) (REV.7/16/10)

ORIGINAL SCALE IN INCHES FOR REDUCED PLANS 0 1 2 3

UNIT:
PROJECT NUMBER & PHASE:
CONTRACT NO.:

DISREGARD PRINTS BEARING EARLIER REVISION DATES →

REVISION DATES				SHEET	OF
-				27	61

FILE => J:\1858_5th_St_BR\517\5th BRIDGE\1858AD08.dgn

USERNAME => untitled DATE PLOTTED => 8/12/2016 TIME PLOTTED => 10:50:09 AM

DIST	COUNTY	ROUTE	POST MILES TOTAL PROJECT	SHEET No	TOTAL SHEETS
03	Sut/Yub	Local			

REGISTERED CIVIL ENGINEER DATE

PLANS APPROVAL DATE

REGISTERED PROFESSIONAL ENGINEER
ROSA GRIGGS
No. 54169
Exp. 12-31-17
CIVIL
STATE OF CALIFORNIA

CITY OF YUBA CITY
1201 CIVIC CENTER BOULEVARD
YUBA CITY, CA 95993

Dokken Engineering
110 Blue Ravine Rd, Suite 200
Folsom, CA 95630 (916) 858-0642

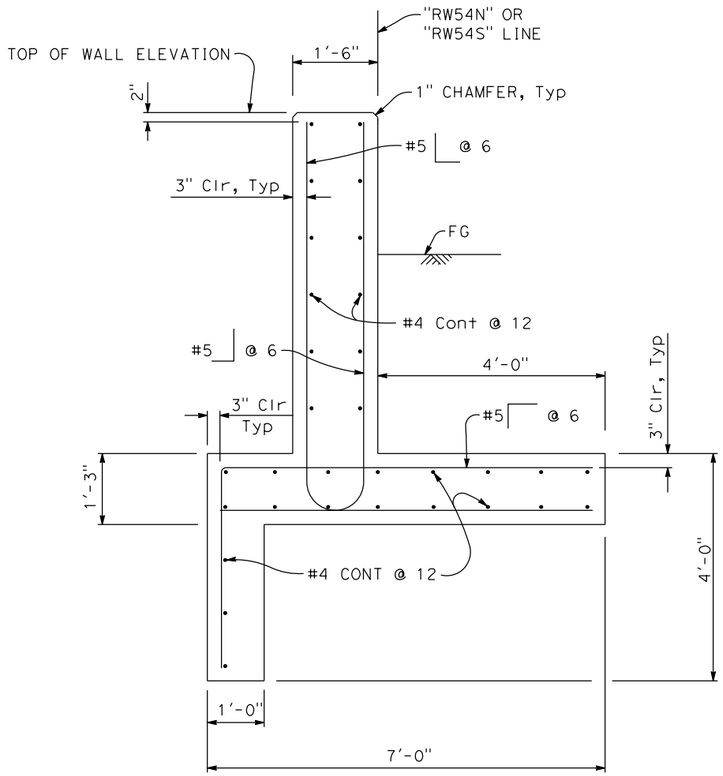

SECTION K-K

3/4" = 1'-0"

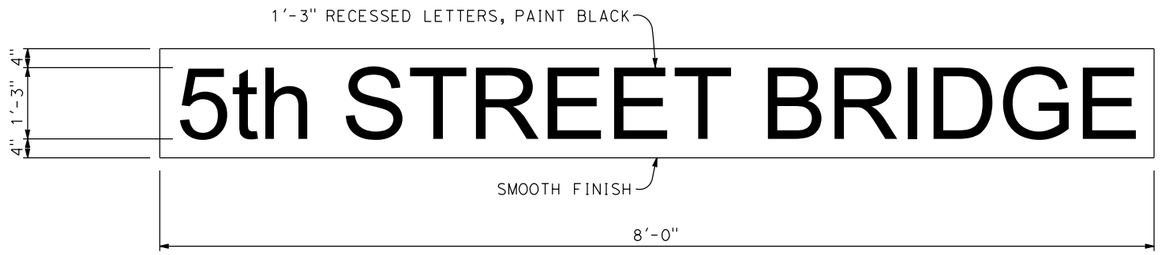

DETAIL Z

3/4" = 1'-0"

USERNAME => untitled DATE PLOTTED => 8/12/2016 TIME PLOTTED => 10:50:10 AM

DESIGN OVERSIGHT		DESIGN	BY R. Griggs	CHECKED T. Osterkamp	PREPARED FOR THE STATE OF CALIFORNIA DEPARTMENT OF TRANSPORTATION
SIGN OFF DATE		DETAILS	BY K. Dang	CHECKED	T. Osterkamp PROJECT ENGINEER
		QUANTITIES	BY	CHECKED	BRIDGE NO. 18C-0012 POST MILES

5TH STREET BRIDGE OVER FEATHER RIVER
FLOOD WALL DETAILS

DESIGN DETAIL SHEET (ENGLISH) (REV.7/16/10)

ORIGINAL SCALE IN INCHES FOR REDUCED PLANS 0 1 2 3

UNIT:
PROJECT NUMBER & PHASE: CONTRACT NO.:

DISREGARD PRINTS BEARING EARLIER REVISION DATES →

REVISION DATES					SHEET	OF
-					28	61

FILE => J:\1858_5th_St_BR\517\5th BRIDGE\1858AD09.dgn

DIST	COUNTY	ROUTE	POST MILES TOTAL PROJECT	SHEET No	TOTAL SHEETS
03	Sut/Yub	Local			

REGISTERED CIVIL ENGINEER DATE

PLANS APPROVAL DATE

ROSA GRIGGS No. 54169 Exp. 12-31-17 CIVIL — REGISTERED PROFESSIONAL ENGINEER — STATE OF CALIFORNIA

CITY OF YUBA CITY
1201 CIVIC CENTER BOULEVARD
YUBA CITY, CA 95993

Dokken Engineering
110 Blue Ravine Rd, Suite 200
Folsom, CA 95630 (916) 858-0642

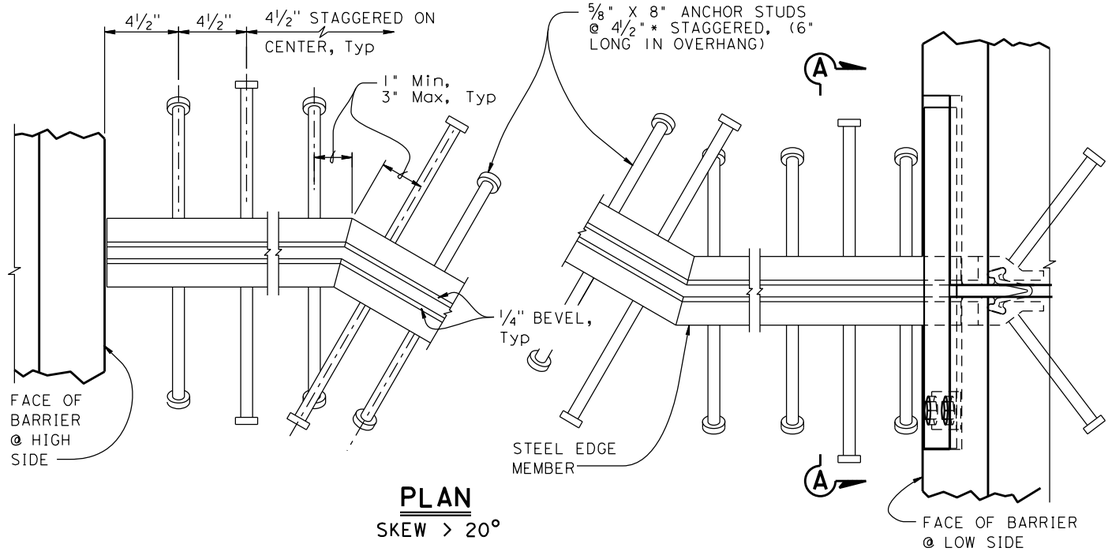

PLAN
SKEW > 20°

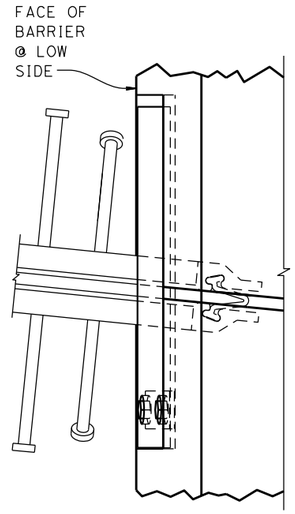

PLAN
SKEW ≤ 20°

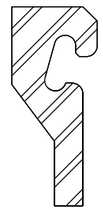

SCHEMATIC STEEL EDGE MEMBER

NOTES:

1. Alternatively, fillet or complete penetration welds may be used at anchor studs.
2. Alternate types of anchor studs may be permitted subject to the authorization by the Engineer.
3. Joint seal assembly to be used in conjunction with closure pour. (See other sheets for limits). Closure pour shall not be placed until final deck surface is within the tolerances specified.
4. Use joint at crown of roadway, at any change in traverse slope in deck and at changes in horizontal direction. Place other joints at or near lanes. All metal parts to be painted or galvanized after fabrication.
5. Sheet Neoprene shall be fabricated in one continuous piece and shall be fabricated to bend around corners. Field splices of the neoprene are not allowed.
6. Insert assembly or expansion anchorage for ⅝" x 1¾" bolts. Use installation bolts extended ½" minimum past nut and coat with bond breaker, after concrete has cured, remove installation bolts, install HS bolts and sheet neoprene.
7. Sidewalk Detail similar to Barrier Detail on low side at both sides if the roadway is crowned or if the difference in elevation between the ends of the seal is 0.5' or less.
8. a_C, a_S, are the thermal expansion coefficients for concrete and steel respectively.
9. Anchor studs shall conform to ASTM 108.

JOINT INFORMATION			"a" DIMENSIONS		
LOCATION	MOVEMENT RATING (MR)	SKEW	WINTER	SPRING & FALL	SUMMER
Abut I	4"	0°			
Abut II	4"	0°			

* TO SET MINIMUM JOINT OPENING "W"

"W" = ½" + [(Max Str temperature in °F) - (actual Str temperature in °F)] * (a_C or a_S) (12) (contributory L in feet)

"W" = ½" Minimum
a_C = 0.0000060
a_S = 0.0000065

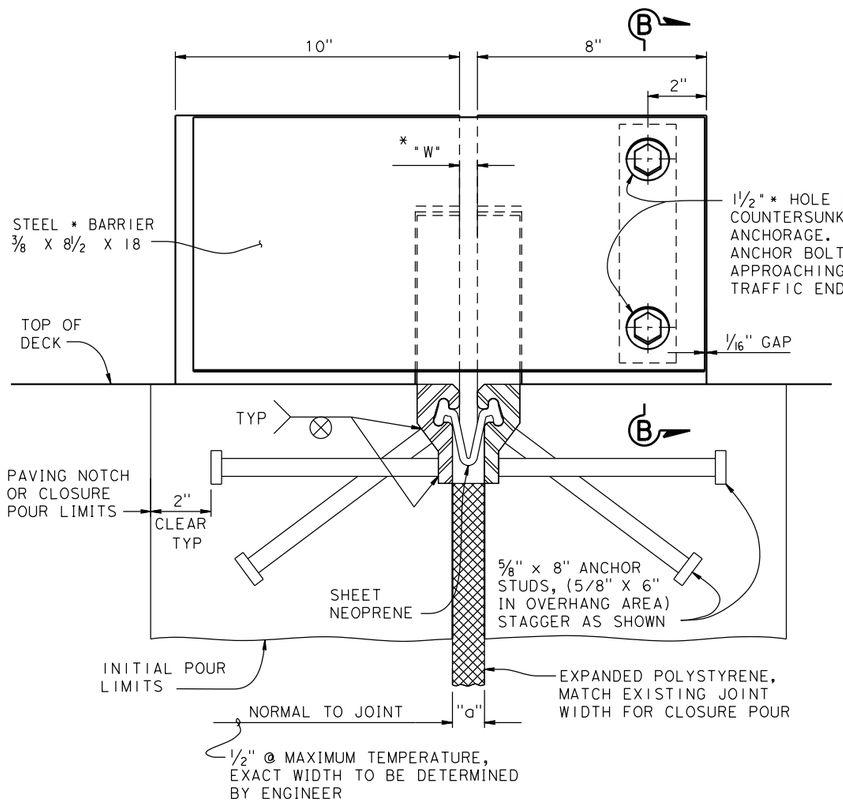

SECTION A-A

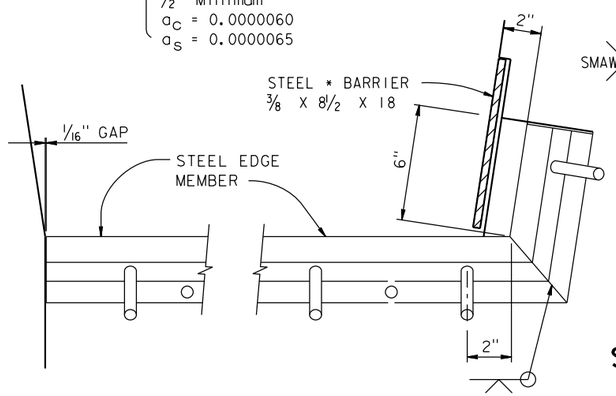

BARRIER DETAIL HIGH SIDE

BARRIER DETAIL LOW SIDE

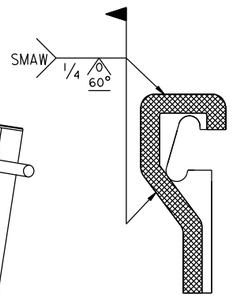

SCHEMATIC FIELD WELD DETAIL

NOTE:
SHADED AREAS TO BE WELDED

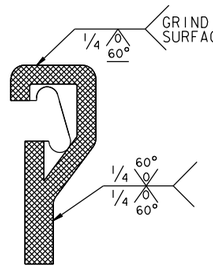

SCHEMATIC SHOP WELD DETAIL

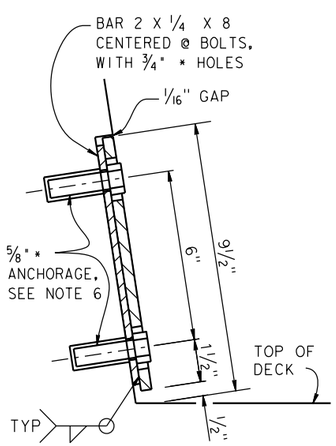

SECTION B-B

NO SCALE

5TH STREET BRIDGE OVER FEATHER RIVER

STRIP JOINT SEAL ASSEMBLY

MAXIMUM MOVEMENT RATING = 4"

DESIGN	BY R. Griggs	CHECKED T. Osterkamp	PREPARED FOR THE STATE OF CALIFORNIA DEPARTMENT OF TRANSPORTATION
DETAILS	BY K. Dang	CHECKED	
QUANTITIES	BY	CHECKED	

DESIGN OVERSIGHT

SIGN OFF DATE

T. Osterkamp
PROJECT ENGINEER

BRIDGE NO. 18C-0012
POST MILES

DESIGN DETAIL SHEET (ENGLISH) (REV.7/16/10)

ORIGINAL SCALE IN INCHES FOR REDUCED PLANS 0 1 2 3

UNIT:
PROJECT NUMBER & PHASE: CONTRACT NO.:

DISREGARD PRINTS BEARING EARLIER REVISION DATES →

REVISION DATES: - | | | | |

SHEET 29 OF 61

FILE => J:\1858_5th_St_BR\517\5th BRIDGE\1858AJS.dgn

USERNAME => unfitted DATE PLOTTED => 8/12/2016 TIME PLOTTED => 10:50:10 AM

DIST	COUNTY	ROUTE	POST MILES TOTAL PROJECT	SHEET No	TOTAL SHEETS
03	Sut/Yub	Local			

REGISTERED CIVIL ENGINEER DATE

PLANS APPROVAL DATE

REGISTERED PROFESSIONAL ENGINEER
ROSA GRIGGS
No. 54169
Exp. 12-31-17
CIVIL
STATE OF CALIFORNIA

CITY OF YUBA CITY
1201 CIVIC CENTER BOULEVARD
YUBA CITY, CA 95993

Dokken Engineering
110 Blue Ravine Rd, Suite 200
Folsom, CA 95630 (916) 858-0642

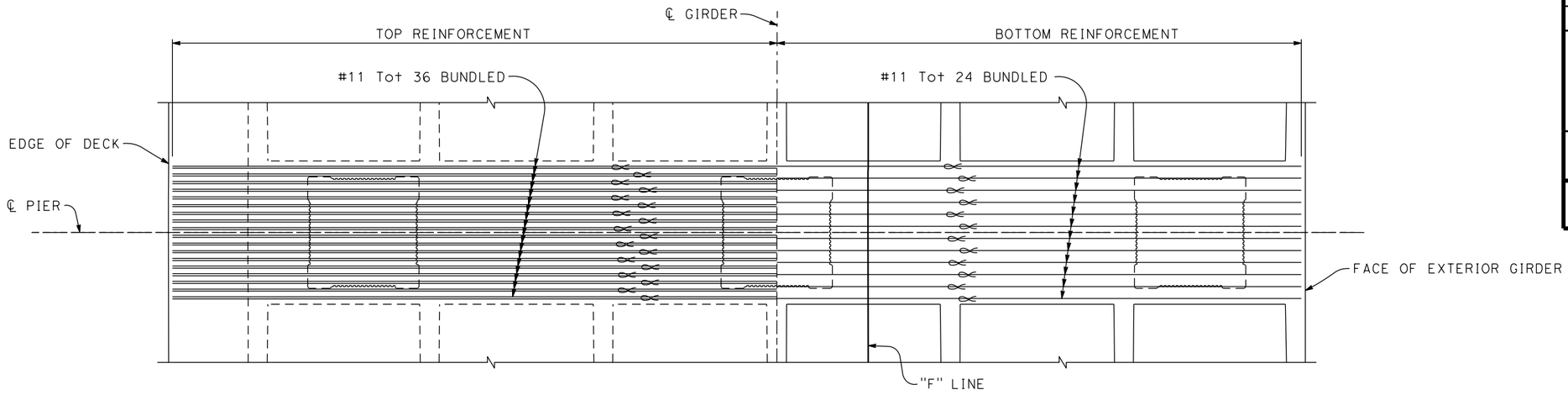

PLAN
1/4" = 1'-0"

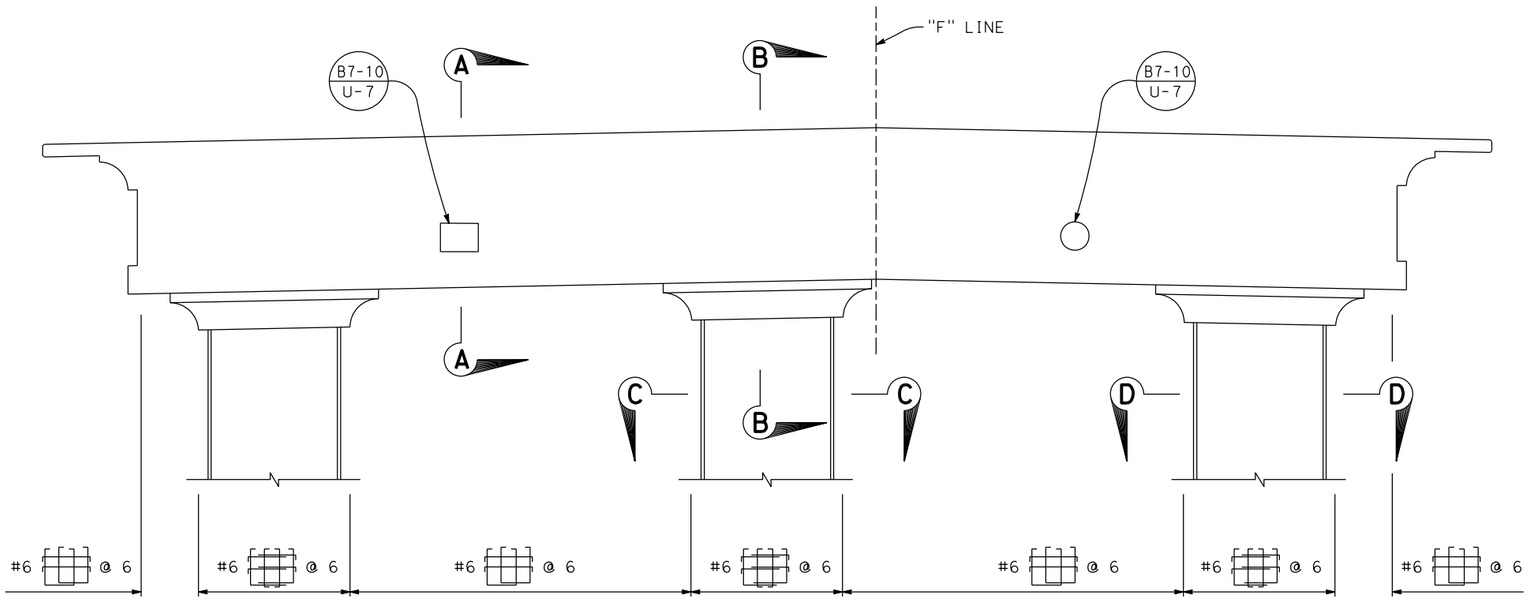

ELEVATION
1/4" = 1'-0"

NOTE:

Denotes bundled reinf

DESIGN OVERSIGHT		DESIGN	BY R. Griggs	CHECKED T. Osterkamp	PREPARED FOR THE STATE OF CALIFORNIA DEPARTMENT OF TRANSPORTATION	T. Osterkamp PROJECT ENGINEER	BRIDGE NO. 18C-0012
SIGN OFF DATE		DETAILS	BY K. Dang	CHECKED			POST MILES
DESIGN DETAIL SHEET (ENGLISH) (REV.7/16/10)		QUANTITIES	BY	CHECKED	ORIGINAL SCALE IN INCHES FOR REDUCED PLANS 0 1 2 3	UNIT: PROJECT NUMBER & PHASE: CONTRACT NO.:	DISREGARD PRINTS BEARING EARLIER REVISION DATES →

5TH STREET BRIDGE OVER FEATHER RIVER
PIER LAYOUT - FRAME 1 & FRAME 2

REVISION DATES				SHEET	OF
-				30	61

FILE => J:\1858_5th_St_BR\517\5th BRIDGE\1858BL01.dgn

USERNAME => untitled DATE PLOTTED => 8/12/2016 TIME PLOTTED => 10:50:11 AM

DIST	COUNTY	ROUTE	POST MILES TOTAL PROJECT	SHEET No	TOTAL SHEETS
03	Sut/Yub	Local			

REGISTERED CIVIL ENGINEER DATE

PLANS APPROVAL DATE

REGISTERED PROFESSIONAL ENGINEER
ROSA GRIGGS
No. 54169
Exp. 12-31-17
CIVIL
STATE OF CALIFORNIA

CITY OF YUBA CITY
1201 CIVIC CENTER BOULEVARD
YUBA CITY, CA 95993

Dokken Engineering
110 Blue Ravine Rd, Suite 200
Folsom, CA 95630 (916) 858-0642

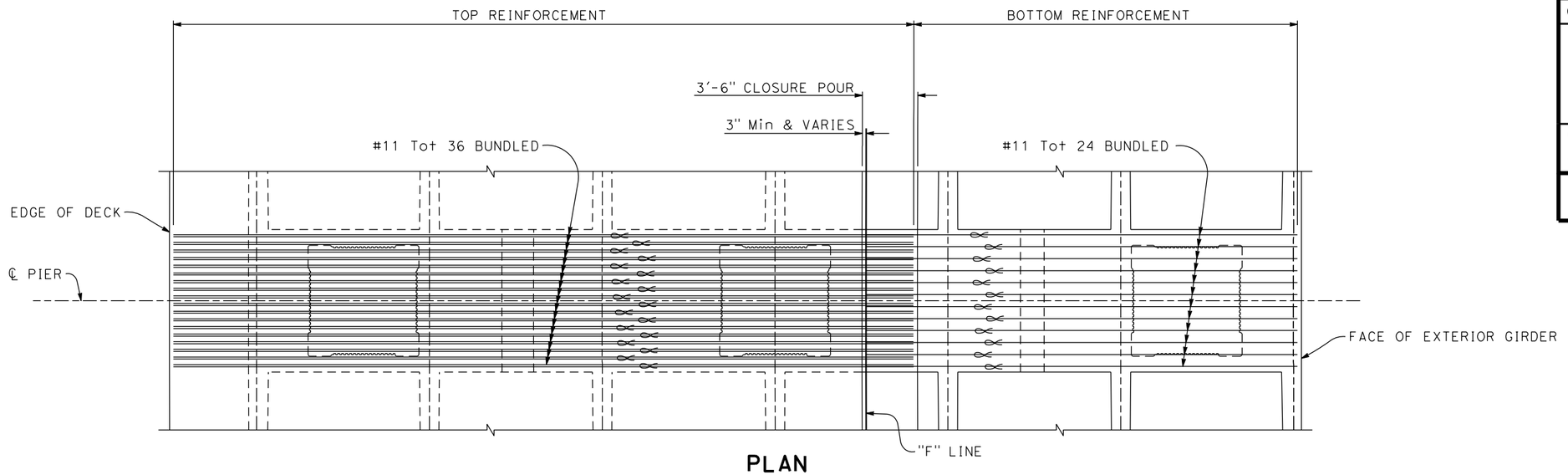

PLAN

1/4" = 1'-0"

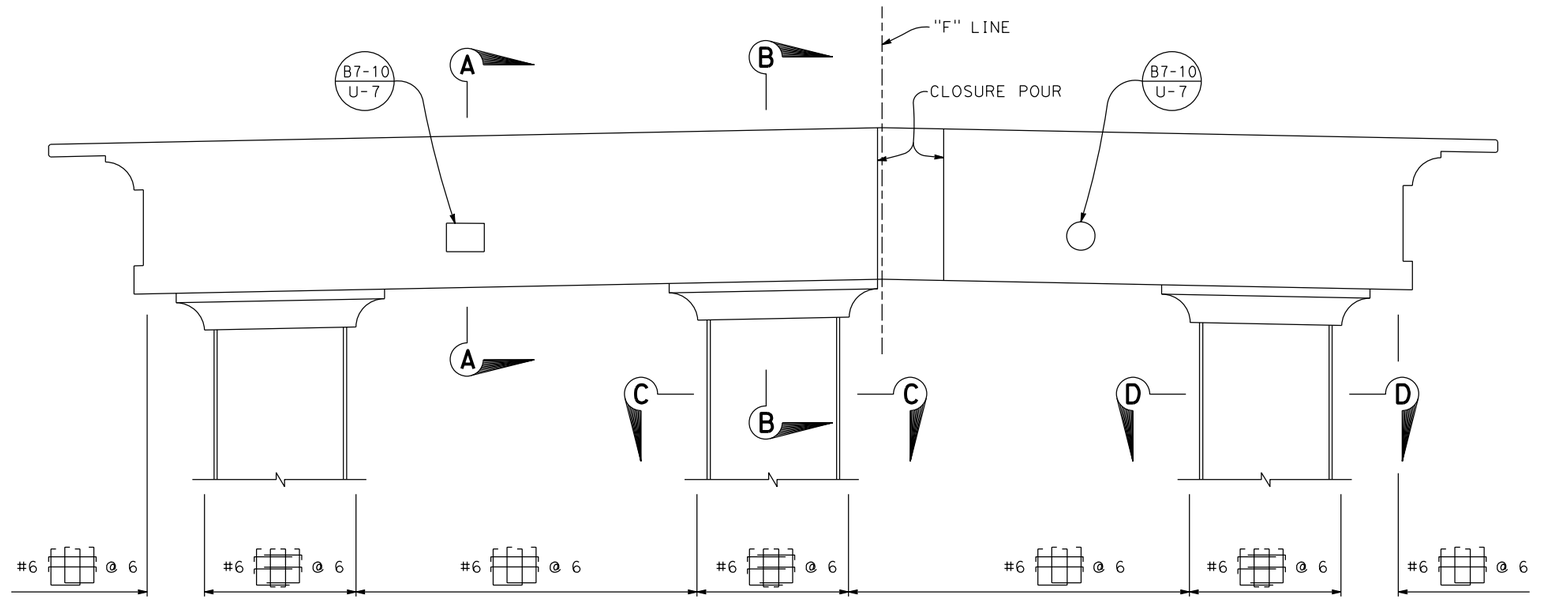

ELEVATION

1/4" = 1'-0"

NOTE:

Denotes bundled reinf

DESIGN OVERSIGHT		DESIGN	BY R. Griggs	CHECKED T. Osterkamp	PREPARED FOR THE STATE OF CALIFORNIA DEPARTMENT OF TRANSPORTATION	T. Osterkamp PROJECT ENGINEER	BRIDGE NO. 18C-0012 POST MILES	5TH STREET BRIDGE OVER FEATHER RIVER
SIGN OFF DATE		DETAILS	BY K. Dang	CHECKED				PIER LAYOUT - FRAME 3
		QUANTITIES	BY	CHECKED				

DESIGN DETAIL SHEET (ENGLISH) (REV.7/16/10)

ORIGINAL SCALE IN INCHES FOR REDUCED PLANS 0 1 2 3

UNIT:
PROJECT NUMBER & PHASE: CONTRACT NO.:

DISREGARD PRINTS BEARING EARLIER REVISION DATES →

REVISION DATES				SHEET	OF
-				31	61

FILE => J:\1858_5th_St_BR\517\5th BRIDGE\1858BL02.dgn

USERNAME => untitled DATE PLOTTED => 8/12/2016 TIME PLOTTED => 10:50:11 AM

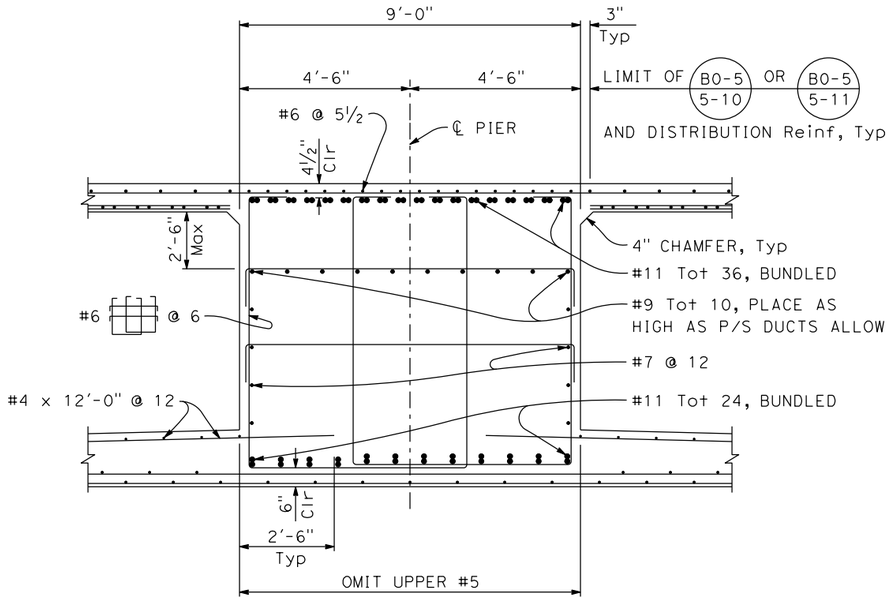

SECTION A-A

½" = 1'-0"

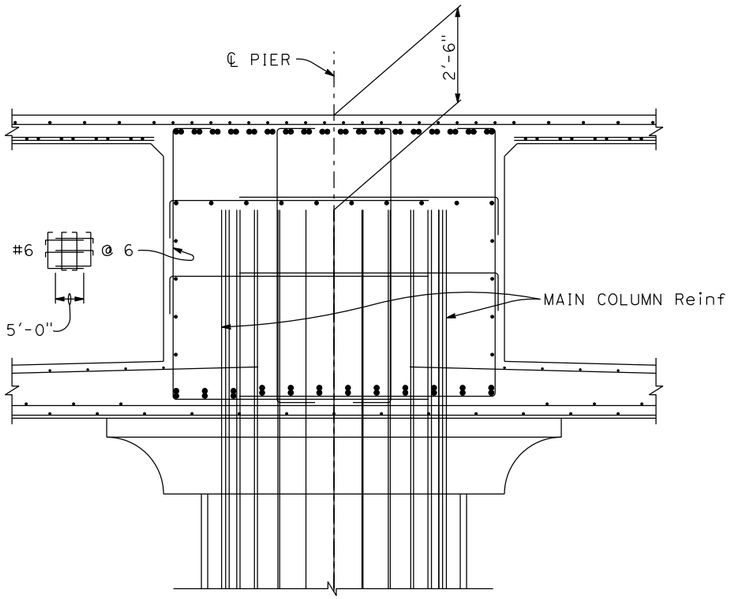

SECTION B-B

½" = 1'-0"

FOR DETAILS OR NOTES NOT SHOWN SEE "SECTION A-A"

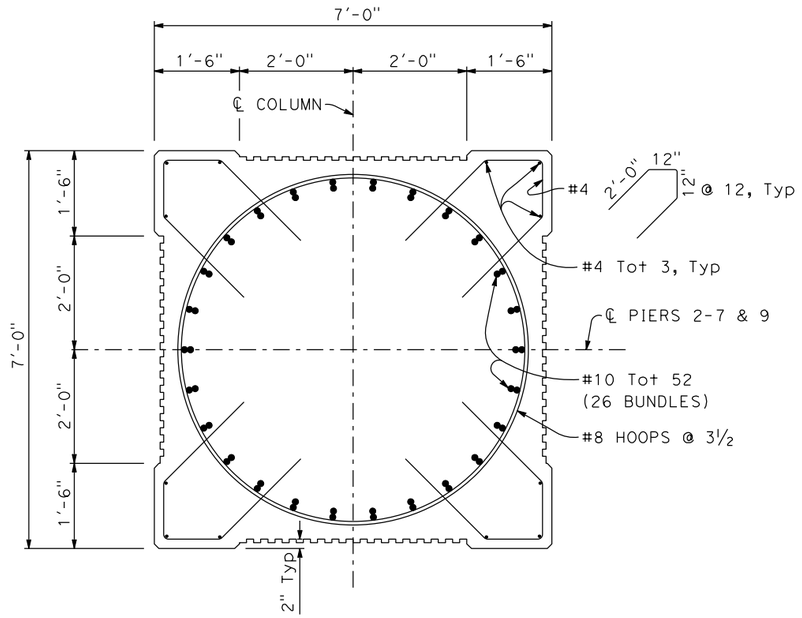

SECTION C-C

¾" = 1'-0"

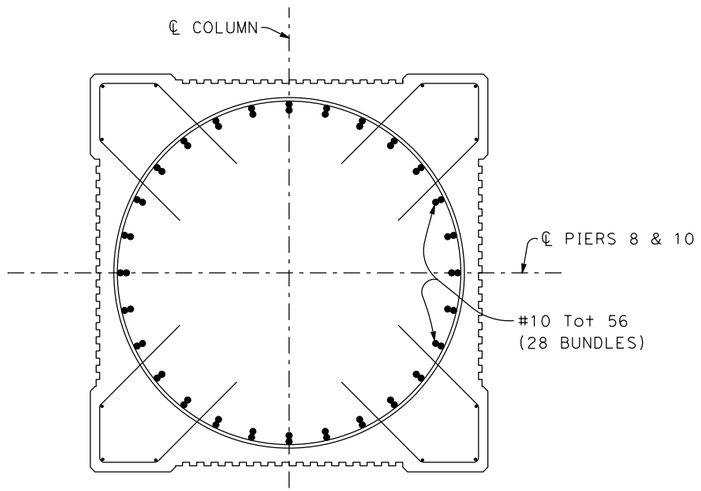

SECTION D-D

¾" = 1'-0"

FOR DETAILS OR NOTES NOT SHOWN SEE "SECTION C-C"

DIST	COUNTY	ROUTE	POST MILES TOTAL PROJECT	SHEET No	TOTAL SHEETS
03	Sut/Yub	Local			

REGISTERED CIVIL ENGINEER DATE

PLANS APPROVAL DATE

REGISTERED PROFESSIONAL ENGINEER — ROSA GRIGGS — No. 54169 — Exp. 12-31-17 — CIVIL — STATE OF CALIFORNIA

CITY OF YUBA CITY
1201 CIVIC CENTER BOULEVARD
YUBA CITY, CA 95993

Dokken Engineering
110 Blue Ravine Rd, Suite 200
Folsom, CA 95630 (916) 858-0642

DESIGN	BY R. Griggs	CHECKED T. Osterkamp	
DETAILS	BY K. Dang	CHECKED	
QUANTITIES	BY	CHECKED	

DESIGN OVERSIGHT

SIGN OFF DATE

PREPARED FOR THE STATE OF CALIFORNIA DEPARTMENT OF TRANSPORTATION

T. Osterkamp
PROJECT ENGINEER

BRIDGE NO. 18C-0012
POST MILES

5TH STREET BRIDGE OVER FEATHER RIVER
PIER DETAIL NO. 1

DESIGN DETAIL SHEET (ENGLISH) (REV.7/16/10)

ORIGINAL SCALE IN INCHES FOR REDUCED PLANS 0 1 2 3

UNIT:
PROJECT NUMBER & PHASE: CONTRACT NO.:

DISREGARD PRINTS BEARING EARLIER REVISION DATES →

REVISION DATES				SHEET	OF
-				32	61

FILE => J:\1858_5th_St_BR\517\5th BRIDGE\1858BD01.dgn

USERNAME => untitled DATE PLOTTED => 8/12/2016 TIME PLOTTED => 10:50:12 AM

DIST	COUNTY	ROUTE	POST MILES TOTAL PROJECT	SHEET No	TOTAL SHEETS
03	Sut/Yub	Local			

REGISTERED CIVIL ENGINEER _____ DATE _____

PLANS APPROVAL DATE _____

REGISTERED PROFESSIONAL ENGINEER
ROSA GRIGGS
No. 54169
Exp. 12-31-17
CIVIL
STATE OF CALIFORNIA

CITY OF YUBA CITY
1201 CIVIC CENTER BOULEVARD
YUBA CITY, CA 95993

Dokken Engineering
110 Blue Ravine Rd, Suite 200
Folsom, CA 95630 (916) 858-0642

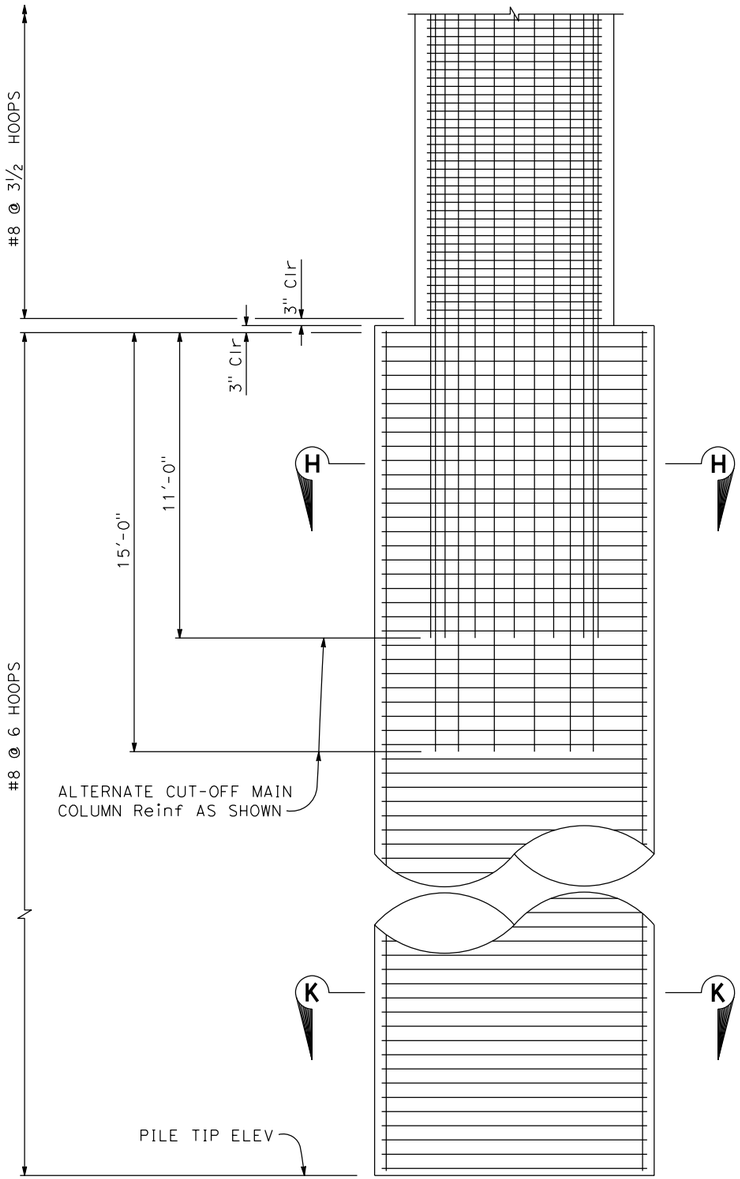

CIDH PILE ELEVATION

3/8" = 1'-0"

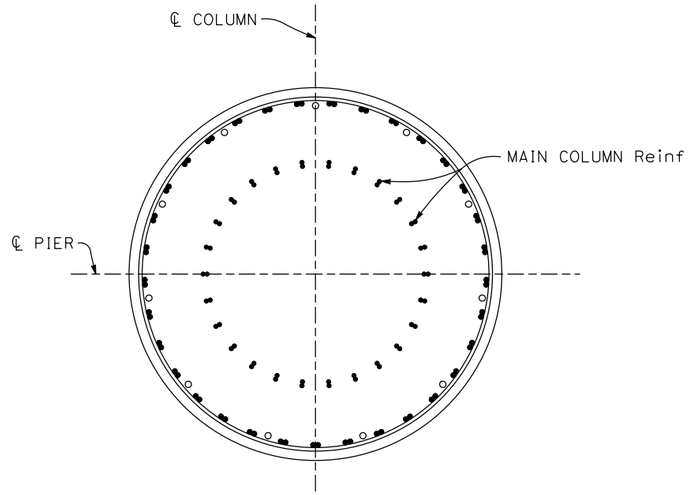

SECTION H-H

½" = 1'-0"

FOR DETAILS OR NOTES NOT SHOWN SEE "SECTION K-K"

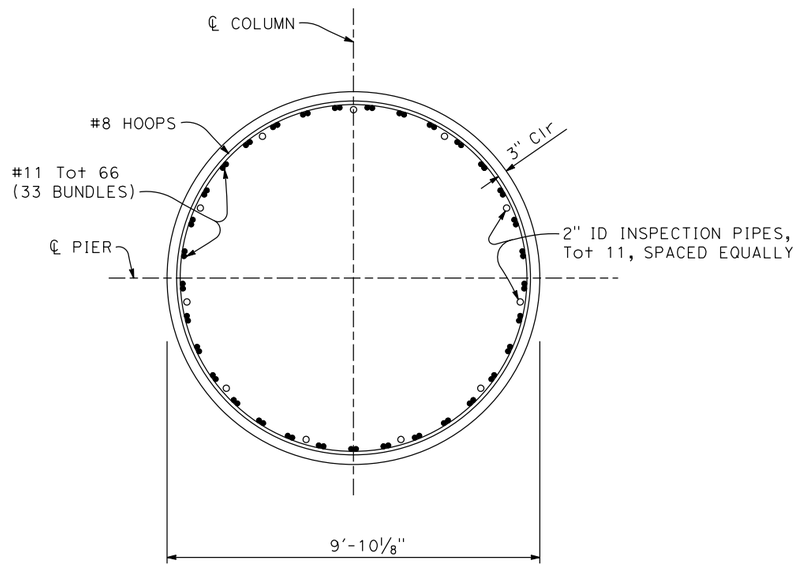

SECTION K-K

½" = 1'-0"

DESIGN OVERSIGHT		DESIGN	BY R. Griggs	CHECKED T. Osterkamp	PREPARED FOR THE STATE OF CALIFORNIA DEPARTMENT OF TRANSPORTATION	T. Osterkamp PROJECT ENGINEER	BRIDGE NO. 18C-0012	5TH STREET BRIDGE OVER FEATHER RIVER
SIGN OFF DATE		DETAILS	BY K. Dang	CHECKED			POST MILES	PIER DETAIL NO. 2
DESIGN DETAIL SHEET (ENGLISH) (REV.7/16/10)		QUANTITIES	BY	CHECKED	ORIGINAL SCALE IN INCHES FOR REDUCED PLANS 0 1 2 3	UNIT: PROJECT NUMBER & PHASE: CONTRACT NO.:	DISREGARD PRINTS BEARING EARLIER REVISION DATES →	REVISION DATES - SHEET 33 OF 61

FILE => J:\1858_5th_St_BR\517\5th BRIDGE\1858BD02.dgn

USERNAME => untitled DATE PLOTTED => 8/12/2016 TIME PLOTTED => 10:50:12 AM

DIST	COUNTY	ROUTE	POST MILES TOTAL PROJECT	SHEET No	TOTAL SHEETS
03	Sut/Yub	Local			

REGISTERED CIVIL ENGINEER DATE

PLANS APPROVAL DATE

REGISTERED PROFESSIONAL ENGINEER — ROSA GRIGGS — No. 54169 — Exp. 12-31-17 — CIVIL — STATE OF CALIFORNIA

CITY OF YUBA CITY
1201 CIVIC CENTER BOULEVARD
YUBA CITY, CA 95993

Dokken Engineering
110 Blue Ravine Rd, Suite 200
Folsom, CA 95630 (916) 858-0642

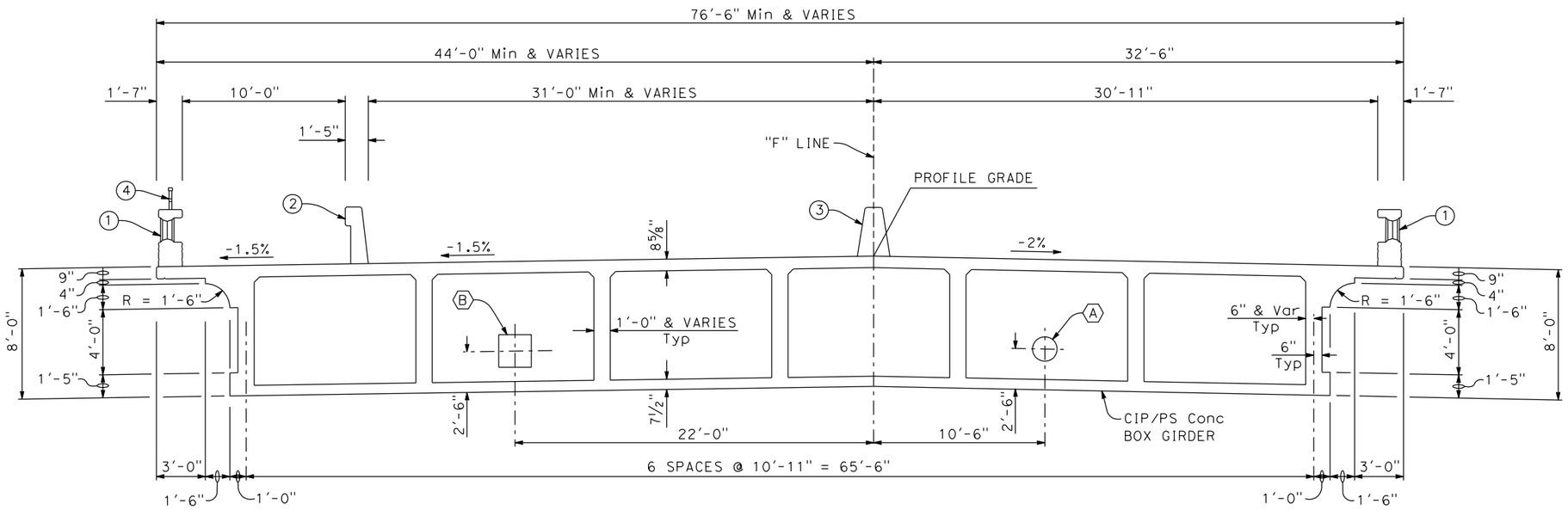

TYPICAL SECTION - FRAME 1 & 2

1/4" = 1'-0"

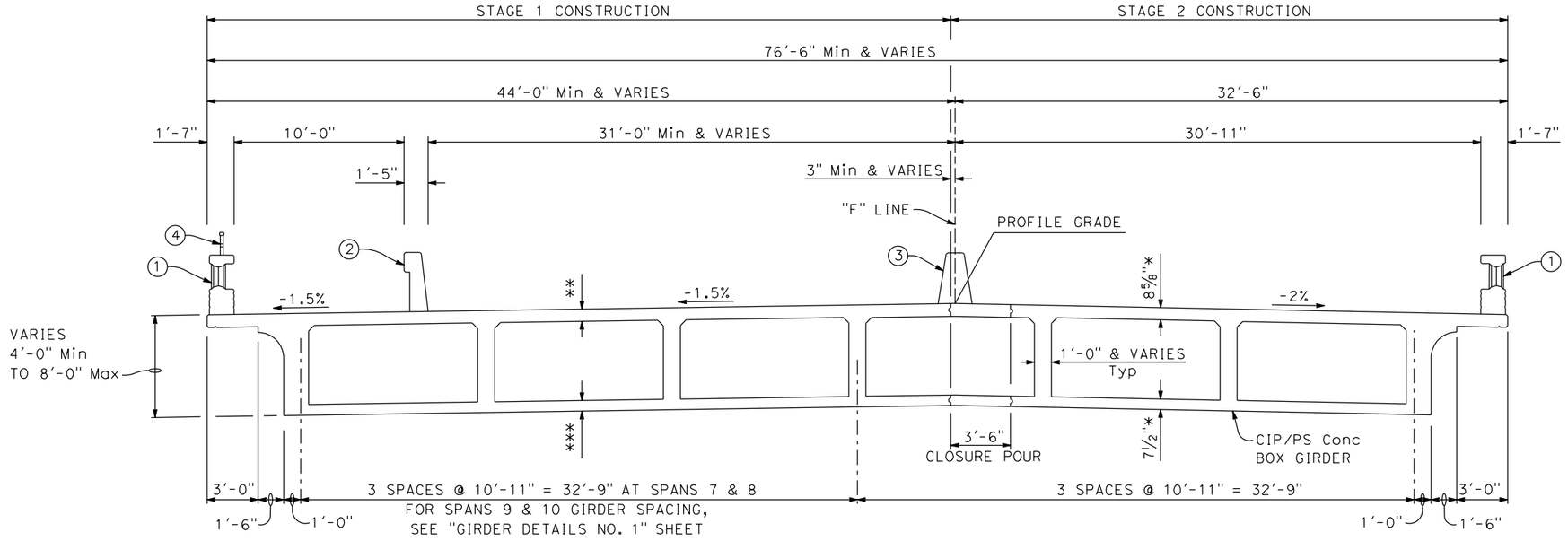

TYPICAL SECTION - FRAME 3

1/4" = 1'-0"

LEGEND

1. Denotes Concrete Barrier Type C412
2. Denotes Concrete Barrier Type 742 (Mod)
3. Denotes Concrete Barrier Type 60A
4. Denotes Tubular Hand Railing

(A) 18" Ø opening for 12" Water Line

(B) 2'-0" x 2'-0" opening for Utilities

* STAGE 2 CONSTRUCTION

** 8 5/8" AT SPANS 7, 8 & 9
9" AT SPAN 10

*** 7 1/2" AT SPANS 7, 8 & 9
8 1/2" AT SPAN 10

DESIGN OVERSIGHT		DESIGN	BY R. Griggs	CHECKED T. Osterkamp	PREPARED FOR THE STATE OF CALIFORNIA DEPARTMENT OF TRANSPORTATION
SIGN OFF DATE		DETAILS	BY K. Dang	CHECKED	
		QUANTITIES	BY	CHECKED	

T. Osterkamp
PROJECT ENGINEER

BRIDGE NO. 18C-0012
POST MILES

5TH STREET BRIDGE OVER FEATHER RIVER

TYPICAL SECTION NO. 1

DESIGN DETAIL SHEET (ENGLISH) (REV.7/16/10)

ORIGINAL SCALE IN INCHES FOR REDUCED PLANS 0 1 2 3

UNIT:
PROJECT NUMBER & PHASE: CONTRACT NO.:

DISREGARD PRINTS BEARING EARLIER REVISION DATES →

REVISION DATES | SHEET 34 | OF 61

FILE => J:\1858_5th_St_BR\517\5th BRIDGE\1858TS01.dgn

USERNAME => untitled DATE PLOTTED => 8/12/2016 TIME PLOTTED => 10:50:13 AM

DIST	COUNTY	ROUTE	POST MILES TOTAL PROJECT	SHEET No	TOTAL SHEETS
03	Sut/Yub	Local			

REGISTERED CIVIL ENGINEER DATE

PLANS APPROVAL DATE

REGISTERED PROFESSIONAL ENGINEER — ROSA GRIGGS — No. 54169 — Exp. 12-31-17 — CIVIL — STATE OF CALIFORNIA

CITY OF YUBA CITY
1201 CIVIC CENTER BOULEVARD
YUBA CITY, CA 95993

Dokken Engineering
110 Blue Ravine Rd, Suite 200
Folsom, CA 95630 (916) 858-0642

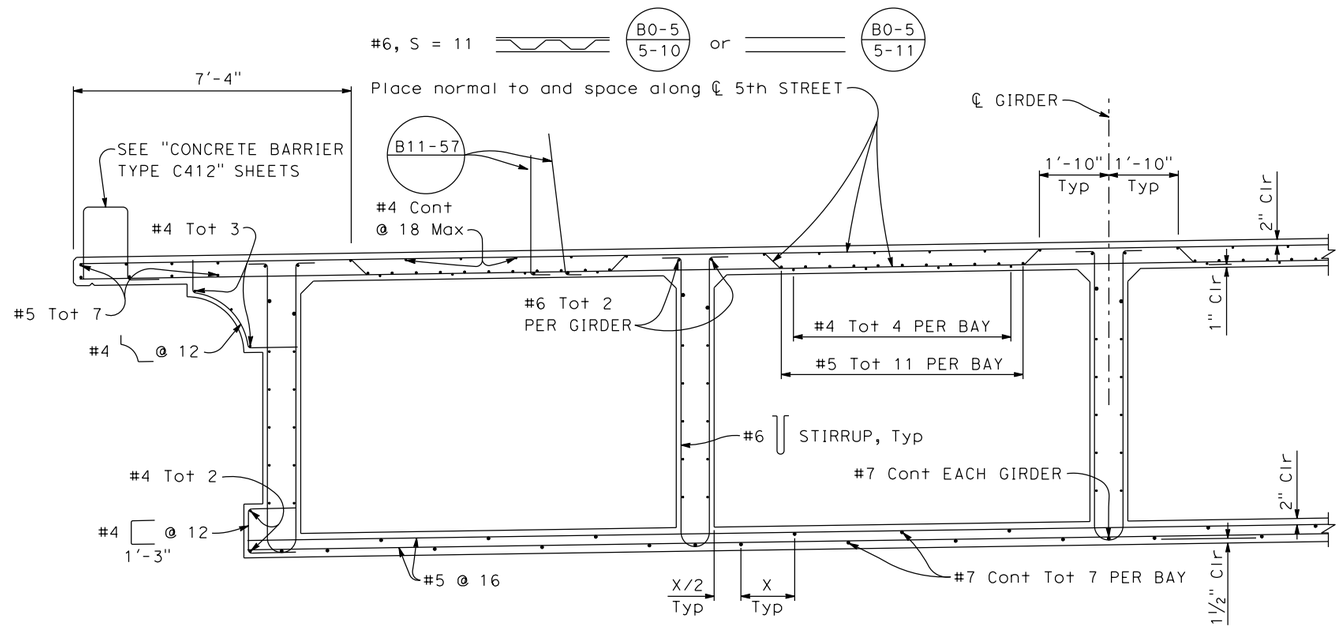

TYPICAL SECTION - FRAME 1 & FRAME 2

½" = 1'-0"

B0-5 B7-1 B8-5

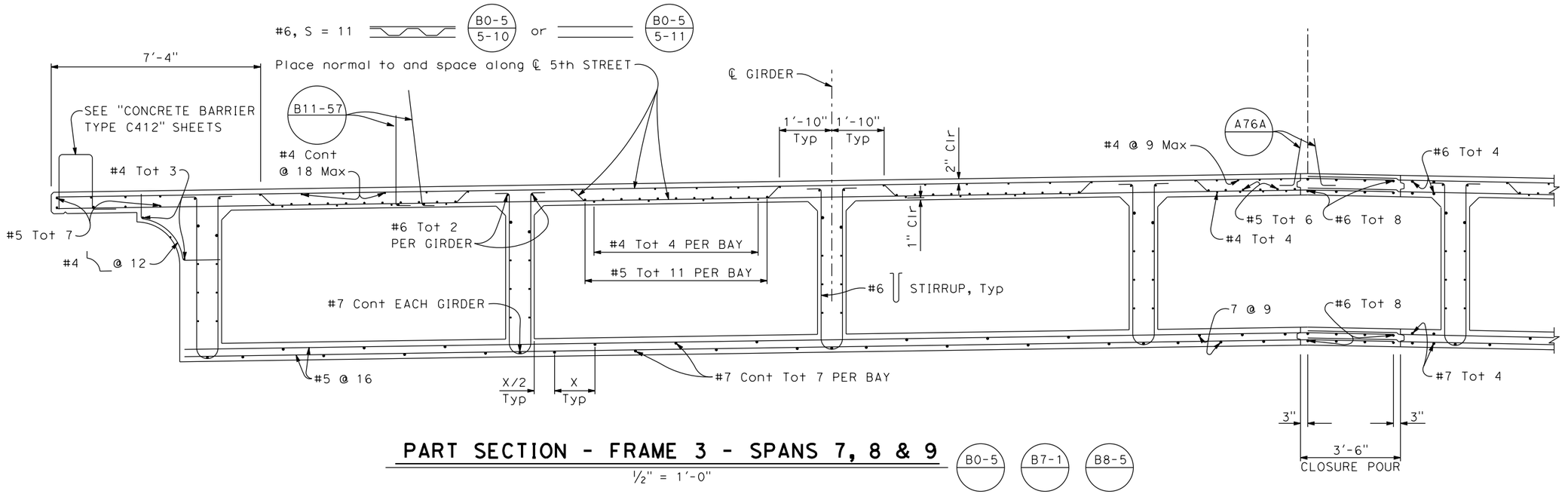

PART SECTION - FRAME 3 - SPANS 7, 8 & 9

½" = 1'-0"

B0-5 B7-1 B8-5

DESIGN OVERSIGHT		DESIGN	BY R. Griggs	CHECKED T. Osterkamp	PREPARED FOR THE STATE OF CALIFORNIA DEPARTMENT OF TRANSPORTATION	T. Osterkamp PROJECT ENGINEER	BRIDGE NO. 18C-0012
SIGN OFF DATE		DETAILS	BY K. Dang	CHECKED			POST MILES
		QUANTITIES	BY	CHECKED			

5TH STREET BRIDGE OVER FEATHER RIVER

TYPICAL SECTION NO. 2

DESIGN DETAIL SHEET (ENGLISH) (REV.7/16/10)

ORIGINAL SCALE IN INCHES FOR REDUCED PLANS 0 1 2 3

UNIT: PROJECT NUMBER & PHASE: CONTRACT NO.:

DISREGARD PRINTS BEARING EARLIER REVISION DATES →

REVISION DATES				SHEET	OF
-				35	61

FILE => J:\1858_5th_St_BR\517\5th BRIDGE\1858TS02.dgn

USERNAME => untitled DATE PLOTTED => 8/12/2016 TIME PLOTTED => 10:50:13 AM

DIST	COUNTY	ROUTE	POST MILES TOTAL PROJECT	SHEET No	TOTAL SHEETS
03	Sut/Yub	Local			

REGISTERED CIVIL ENGINEER DATE

PLANS APPROVAL DATE

REGISTERED PROFESSIONAL ENGINEER — ROSA GRIGGS — No. 54169 — Exp. 12-31-17 — CIVIL — STATE OF CALIFORNIA

CITY OF YUBA CITY
1201 CIVIC CENTER BOULEVARD
YUBA CITY, CA 95993

Dokken Engineering
110 Blue Ravine Rd, Suite 200
Folsom, CA 95630 (916) 858-0642

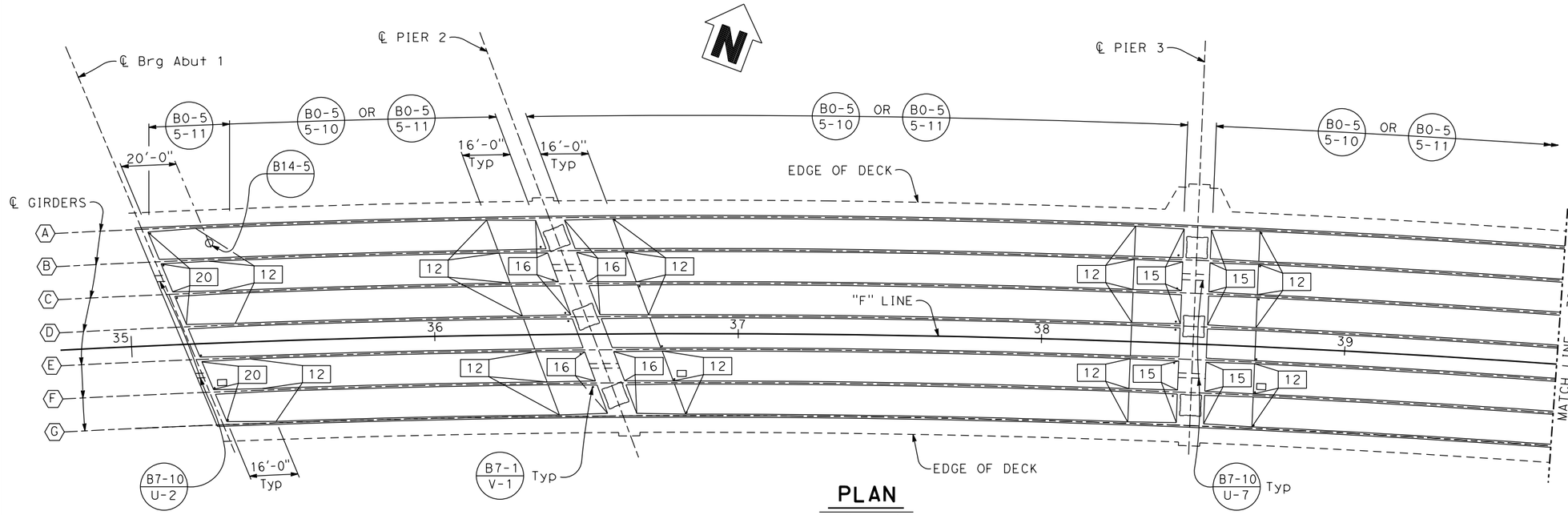

PLAN

1" = 20'

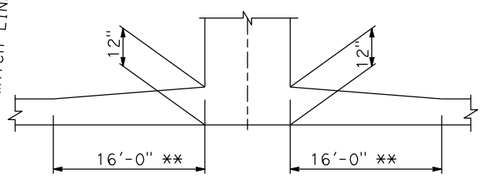

** MEASURED PERPENDICULAR TO ℄ SUPPORT

DETAIL A

NO SCALE

TYPICAL AT ALL PIERS.

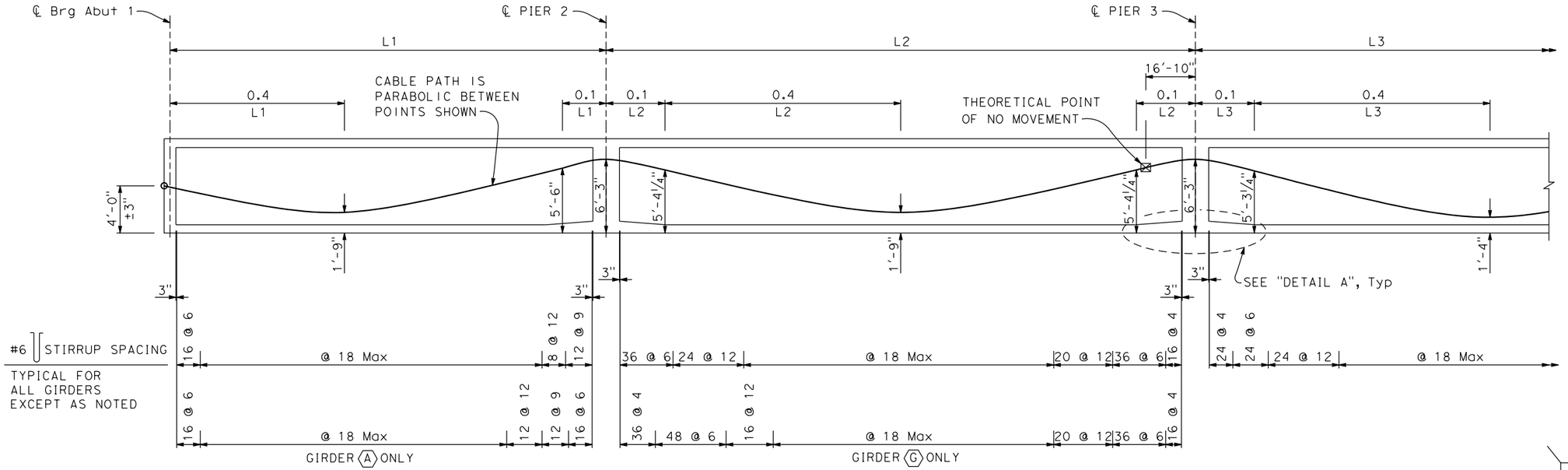

LONGITUDINAL SECTION

NO SCALE

NOTE:

L = distance measured along ℄ girder from ℄ Abut to ℄ Pier or ℄ Pier to ℄ Pier

LEGEND

Denotes girder stem width in inches.

Denotes soffit access grate, see "UTILITY DETAILS" sheet.

Denotes soffit access opening.

DESIGN OVERSIGHT		DESIGN	BY R. Griggs	CHECKED T. Osterkamp	PREPARED FOR THE STATE OF CALIFORNIA DEPARTMENT OF TRANSPORTATION
SIGN OFF DATE		DETAILS	BY K. Dang	CHECKED	
		QUANTITIES	BY	CHECKED	

T. Osterkamp
PROJECT ENGINEER

BRIDGE NO. 18C-0012
POST MILES

5TH STREET BRIDGE OVER FEATHER RIVER

GIRDER LAYOUT NO. 1

DESIGN DETAIL SHEET (ENGLISH) (REV.7/16/10)

ORIGINAL SCALE IN INCHES FOR REDUCED PLANS 0 1 2 3

UNIT:
PROJECT NUMBER & PHASE: CONTRACT NO.:

DISREGARD PRINTS BEARING EARLIER REVISION DATES →

REVISION DATES				SHEET	OF
-				36	61

FILE => J:\1858_5th_St_BR\517\5th BRIDGE\1858GL01.dgn

USERNAME => untitled DATE PLOTTED => 8/12/2016 TIME PLOTTED => 10:50:14 AM

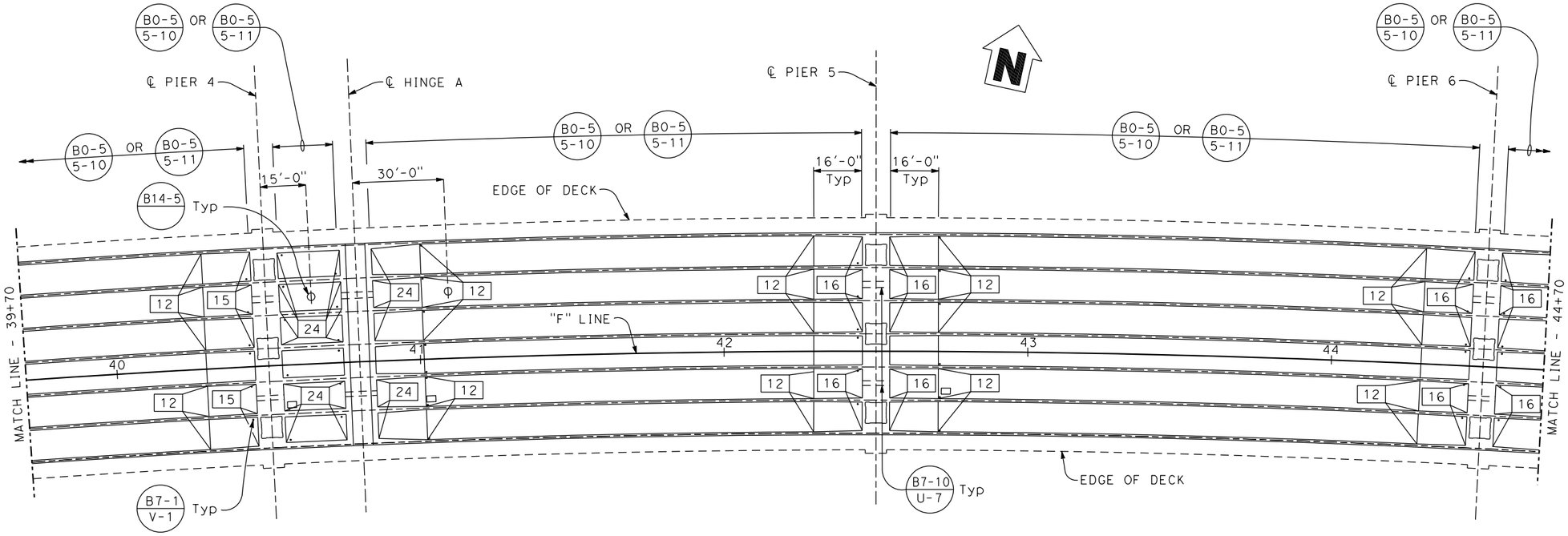

PLAN

1" = 20'

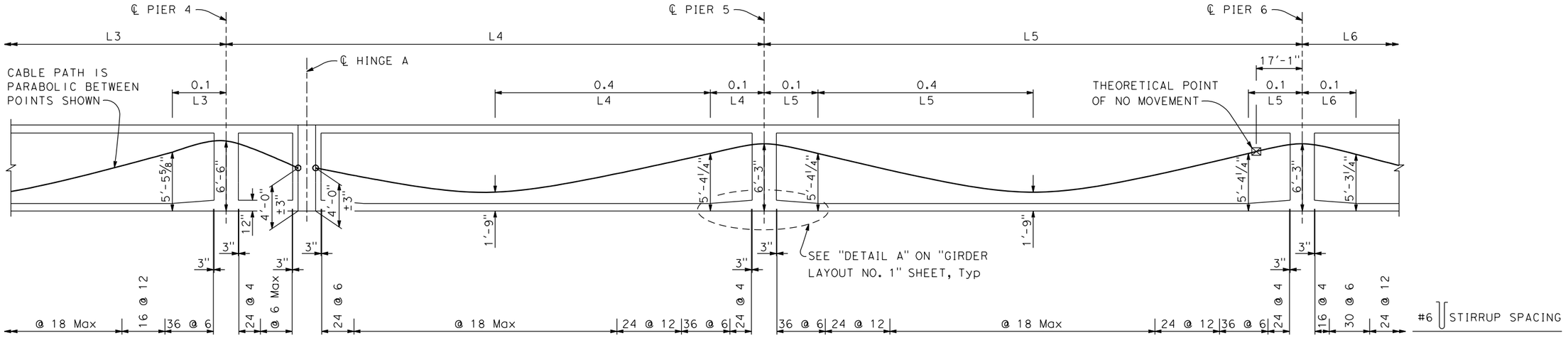

LONGITUDINAL SECTION

NO SCALE

NOTE:

L = distance measured along ℄ girder from ℄ Abut to ℄ Pier or ℄ Pier to ℄ Pier

LEGEND

- □ Denotes girder stem width in inches.
- ▭ Denotes soffit access grate, see "UTILITY DETAILS" sheet.
- ○ Denotes soffit access opening.

DIST	COUNTY	ROUTE	POST MILES TOTAL PROJECT	SHEET No	TOTAL SHEETS
03	Sut/Yub	Local			

REGISTERED CIVIL ENGINEER DATE

PLANS APPROVAL DATE

REGISTERED PROFESSIONAL ENGINEER — ROSA GRIGGS — No. 54169 — Exp. 12-31-17 — CIVIL — STATE OF CALIFORNIA

CITY OF YUBA CITY
1201 CIVIC CENTER BOULEVARD
YUBA CITY, CA 95993

Dokken Engineering
110 Blue Ravine Rd, Suite 200
Folsom, CA 95630 (916) 858-0642

DESIGN OVERSIGHT

SIGN OFF DATE

	BY	CHECKED
DESIGN	R. Griggs	T. Osterkamp
DETAILS	K. Dang	CHECKED
QUANTITIES	BY	CHECKED

PREPARED FOR THE STATE OF CALIFORNIA DEPARTMENT OF TRANSPORTATION

T. Osterkamp
PROJECT ENGINEER

BRIDGE NO. 18C-0012
POST MILES

5TH STREET BRIDGE OVER FEATHER RIVER
GIRDER LAYOUT NO. 2

DESIGN DETAIL SHEET (ENGLISH) (REV.7/16/10)

ORIGINAL SCALE IN INCHES FOR REDUCED PLANS 0 1 2 3

UNIT:
PROJECT NUMBER & PHASE: CONTRACT NO.:

DISREGARD PRINTS BEARING EARLIER REVISION DATES →

REVISION DATES: -

SHEET 37 OF 61

FILE => J:\1858_5th_St_BR\517\5th BRIDGE\1858GL02.dgn

USERNAME => untitled DATE PLOTTED => 8/12/2016 TIME PLOTTED => 10:50:14 AM

DIST	COUNTY	ROUTE	POST MILES TOTAL PROJECT	SHEET No	TOTAL SHEETS
03	Sut/Yub	Local			

REGISTERED CIVIL ENGINEER DATE

PLANS APPROVAL DATE

REGISTERED PROFESSIONAL ENGINEER — ROSA GRIGGS — No. 54169 — Exp. 12-31-17 — CIVIL — STATE OF CALIFORNIA

CITY OF YUBA CITY
1201 CIVIC CENTER BOULEVARD
YUBA CITY, CA 95993

Dokken Engineering
110 Blue Ravine Rd, Suite 200
Folsom, CA 95630 (916) 858-0642

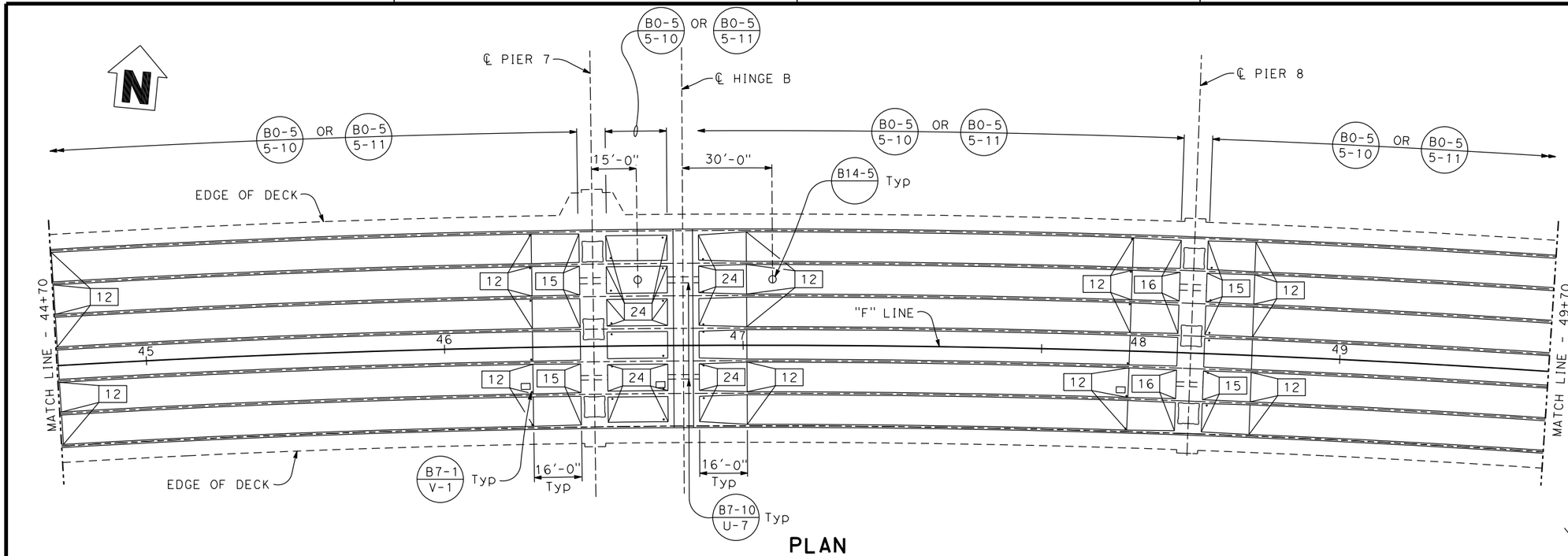

PLAN

1" = 20'

LEGEND

- Denotes girder stem width in inches.
- Denotes soffit access grate, see "UTILITY DETAILS" sheet.
- Denotes soffit access opening.

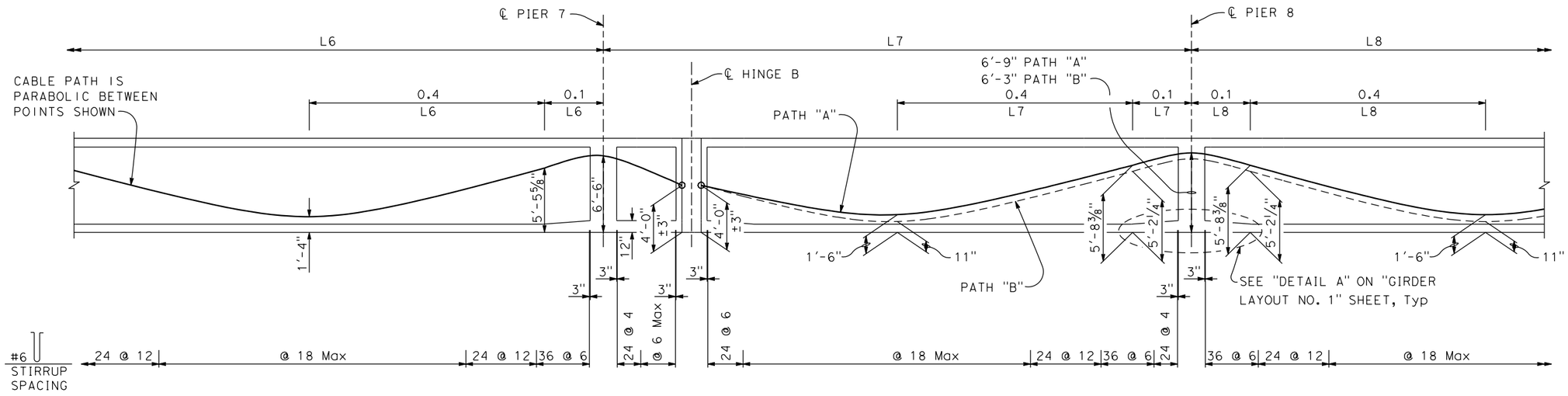

LONGITUDINAL SECTION

NO SCALE

NOTE:

L = distance measured along ℄ girder from ℄ Abut to ℄ Pier or ℄ Pier to ℄ Pier

DESIGN OVERSIGHT		DESIGN	BY R. Griggs	CHECKED T. Osterkamp	PREPARED FOR THE STATE OF CALIFORNIA DEPARTMENT OF TRANSPORTATION	T. Osterkamp PROJECT ENGINEER	BRIDGE NO. 18C-0012
SIGN OFF DATE		DETAILS	BY K. Dang	CHECKED			POST MILES
		QUANTITIES	BY	CHECKED			

5TH STREET BRIDGE OVER FEATHER RIVER

GIRDER LAYOUT NO. 3

DESIGN DETAIL SHEET (ENGLISH) (REV.7/16/10)

ORIGINAL SCALE IN INCHES FOR REDUCED PLANS 0 1 2 3

UNIT: PROJECT NUMBER & PHASE: CONTRACT NO.:

DISREGARD PRINTS BEARING EARLIER REVISION DATES →

REVISION DATES				SHEET	OF
-				38	61

FILE => J:\1858_5th_St_BR\517\5th BRIDGE\1858GL03.dgn

USERNAME => untitled DATE PLOTTED => 8/12/2016 TIME PLOTTED => 10:50:15 AM

DIST	COUNTY	ROUTE	POST MILES TOTAL PROJECT	SHEET No	TOTAL SHEETS
03	Sut/Yub	Local			

REGISTERED CIVIL ENGINEER DATE

PLANS APPROVAL DATE

REGISTERED PROFESSIONAL ENGINEER — ROSA GRIGGS — No. 54169 — Exp. 12-31-17 — CIVIL — STATE OF CALIFORNIA

CITY OF YUBA CITY
1201 CIVIC CENTER BOULEVARD
YUBA CITY, CA 95993

Dokken Engineering
110 Blue Ravine Rd, Suite 200
Folsom, CA 95630 (916) 858-0642

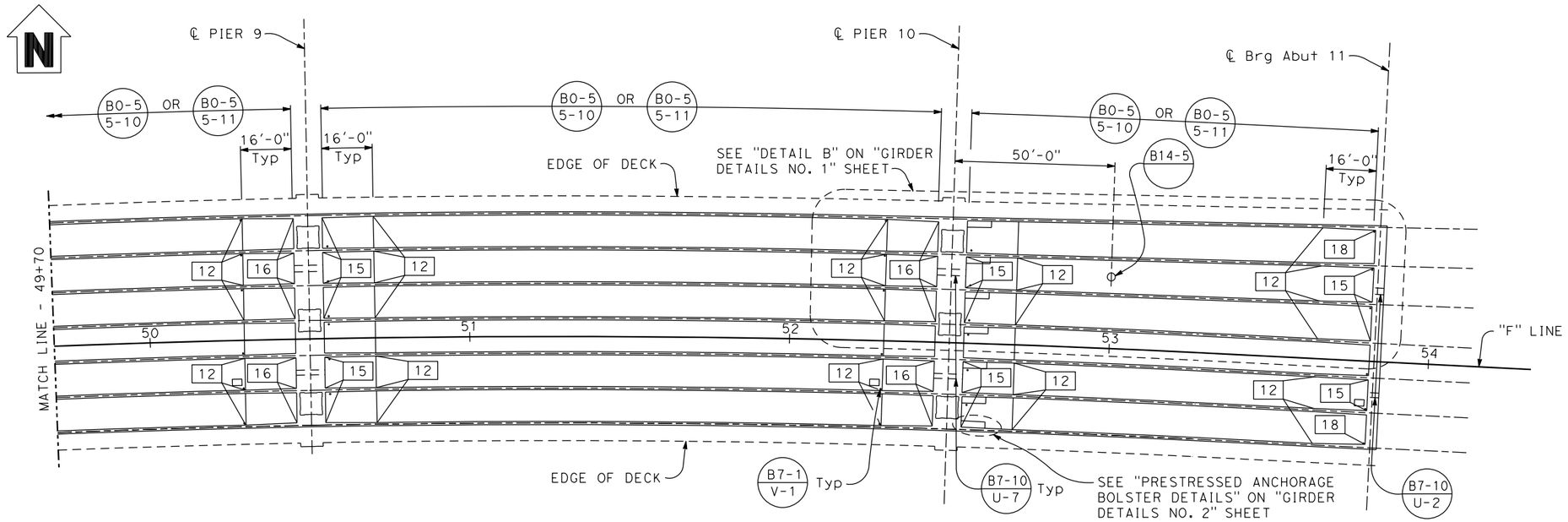

PLAN
1" = 20'

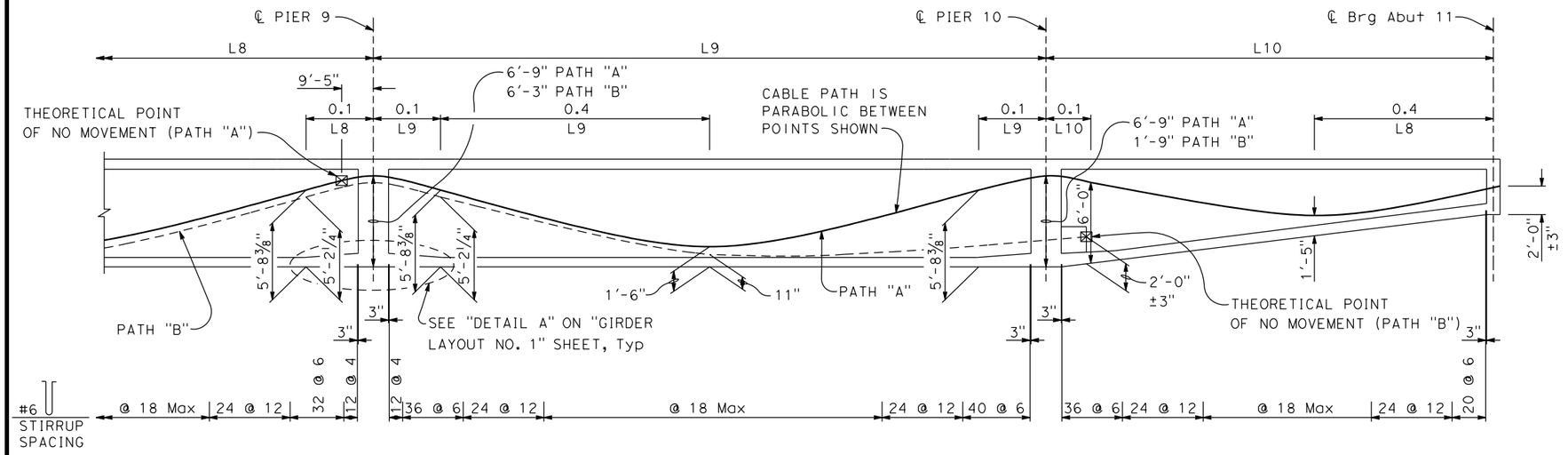

LONGITUDINAL SECTION
NO SCALE

LEGEND
- Denotes girder stem width in inches.
- Denotes soffit access grate, see "UTILITY DETAILS" sheet.
- Denotes soffit access opening.

NOTES:
L = distance measured along ℄ girder from ℄ Abut to ℄ Pier or ℄ Pier to ℄ Pier

For "DETAIL B", see "GIRDER DETAILS NO. 1" SHEET.

DESIGN OVERSIGHT		DESIGN	BY R. Griggs	CHECKED T. Osterkamp	PREPARED FOR THE STATE OF CALIFORNIA DEPARTMENT OF TRANSPORTATION	T. Osterkamp PROJECT ENGINEER	BRIDGE NO. 18C-0012 / POST MILES
SIGN OFF DATE		DETAILS	BY K. Dang	CHECKED			
		QUANTITIES	BY	CHECKED			

5TH STREET BRIDGE OVER FEATHER RIVER
GIRDER LAYOUT NO. 4

DESIGN DETAIL SHEET (ENGLISH) (REV.7/16/10)

ORIGINAL SCALE IN INCHES FOR REDUCED PLANS 0 1 2 3

UNIT:
PROJECT NUMBER & PHASE: CONTRACT NO.:

DISREGARD PRINTS BEARING EARLIER REVISION DATES →

REVISION DATES

SHEET 39 OF 61

FILE => J:\1858_5th_St_BR\517\5th BRIDGE\1858GL04.dgn

USERNAME => untitled DATE PLOTTED => 8/12/2016 TIME PLOTTED => 10:50:15 AM

PRESTRESSING NOTES

FRAME 1

270 KSI low Relaxation Strand:

P_{jack} = 22,900 kips

A_{ps} (Min Area of Prestressing Steel) = 40 in^2

Anchor Set = 3/8 in.

Total Number of Girders = 7

Contractor shall submit elongation calculations based on initial stress at
☒ = 0.861 times jacking stress.

k = 0.0002 μ = 0.15

Two end stressing shall be performed.

FRAME 2

270 KSI low Relaxation Strand:

P_{jack} = 23,000 kips

A_{ps} (Min Area of Prestressing Steel) = 40 in^2

Anchor Set = 3/8 in.

Total Number of Girders = 7

Contractor shall submit elongation calculations based on initial stress at
☒ = 0.861 times jacking stress.

k = 0.0002 μ = 0.15

Two end stressing shall be performed.

Concrete: f'_c = 4.0 ksi @ 28 days

f'_{ci} = 3.5 ksi @ time of stressing

The final force ratio (larger divided by smaller) between any two girders shall not exceed the ratio of 10:9.

PRESTRESSING NOTES

FRAME 3 (STAGE 1) - PATH "A"

270 KSI low Relaxation Strand:

P_{jack} = 9,500 kips

Anchor Set = 3/8 in.

Total Number of Girders = 4

Contractor shall submit elongation calculations based on initial stress at
☒ = 0.817 times jacking stress.

k = 0.0002 μ = 0.20

Two end stressing shall be performed.

FRAME 3 (STAGE 1) - PATH "B"

270 KSI low Relaxation Strand:

P_{jack} = 4,500 kips

Anchor Set = 3/8 in.

Total Number of Girders = 4

Contractor shall submit elongation calculations based on initial stress at
☒ = 0.768 times jacking stress.

k = 0.0002 μ = 0.15

One end stressing shall be performed.

Concrete: f'_c = 4.0 ksi @ 28 days

f'_{ci} = 3.5 ksi @ time of stressing

The final force ratio (larger divided by smaller) between any two girders shall not exceed the ratio of 10:9.

PRESTRESSING NOTES

FRAME 3 (STAGE 2) - PATH "A"

270 KSI low Relaxation Strand:

P_{jack} = 7,100 kips

Anchor Set = 3/8 in.

Total Number of Girders = 3

Contractor shall submit elongation calculations based on initial stress at
☒ = 0.817 times jacking stress.

k = 0.0002 μ = 0.20

Two end stressing shall be performed.

FRAME 3 (STAGE 2) - PATH "B"

270 KSI low Relaxation Strand:

P_{jack} = 3,400 kips

Anchor Set = 3/8 in.

Total Number of Girders = 3

Contractor shall submit elongation calculations based on initial stress at
☒ = 0.768 times jacking stress.

k = 0.0002 μ = 0.15

One end stressing shall be performed.

Concrete: f'_c = 4.0 ksi @ 28 days

f'_{ci} = 3.5 ksi @ time of stressing

The final force ratio (larger divided by smaller) between any two girders shall not exceed the ratio of 10:9.

DIST	COUNTY	ROUTE	POST MILES TOTAL PROJECT	SHEET No	TOTAL SHEETS
03	Sut/Yub	Local			

REGISTERED CIVIL ENGINEER DATE

REGISTERED PROFESSIONAL ENGINEER — ROSA GRIGGS — No. 54169 — Exp. 12-31-17 — CIVIL — STATE OF CALIFORNIA

PLANS APPROVAL DATE

CITY OF YUBA CITY
1201 CIVIC CENTER BOULEVARD
YUBA CITY, CA 95993

Dokken Engineering
110 Blue Ravine Rd, Suite 200
Folsom, CA 95630 (916) 858-0642

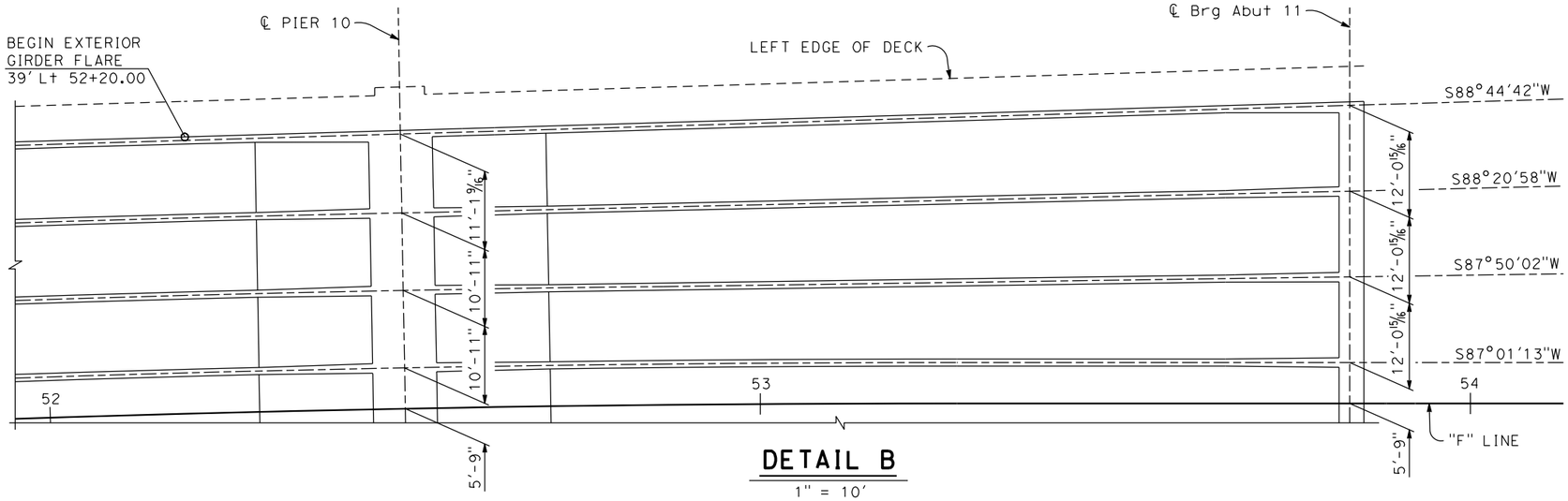

DETAIL B
1" = 10'

NOTE:

For location of "DETAIL B", see "GIRDER LAYOUT NO. 4" SHEET.

DESIGN OVERSIGHT

SIGN OFF DATE

	BY	CHECKED
DESIGN	R. Griggs	T. Osterkamp
DETAILS	K. Dang	CHECKED
QUANTITIES	BY	CHECKED

PREPARED FOR THE STATE OF CALIFORNIA DEPARTMENT OF TRANSPORTATION

T. Osterkamp
PROJECT ENGINEER

BRIDGE NO. 18C-0012
POST MILES

5TH STREET BRIDGE OVER FEATHER RIVER
GIRDER DETAILS NO. 1

DESIGN DETAIL SHEET (ENGLISH) (REV.7/16/10)

ORIGINAL SCALE IN INCHES FOR REDUCED PLANS 0 1 2 3

UNIT:
PROJECT NUMBER & PHASE: CONTRACT NO.:

DISREGARD PRINTS BEARING EARLIER REVISION DATES →

REVISION DATES: -

SHEET 40 OF 61

FILE => J:\1858_5th_St_BR\517\5th BRIDGE\1858GD01.dgn

USERNAME => unfitted DATE PLOTTED => 8/12/2016 TIME PLOTTED => 10:50:16 AM

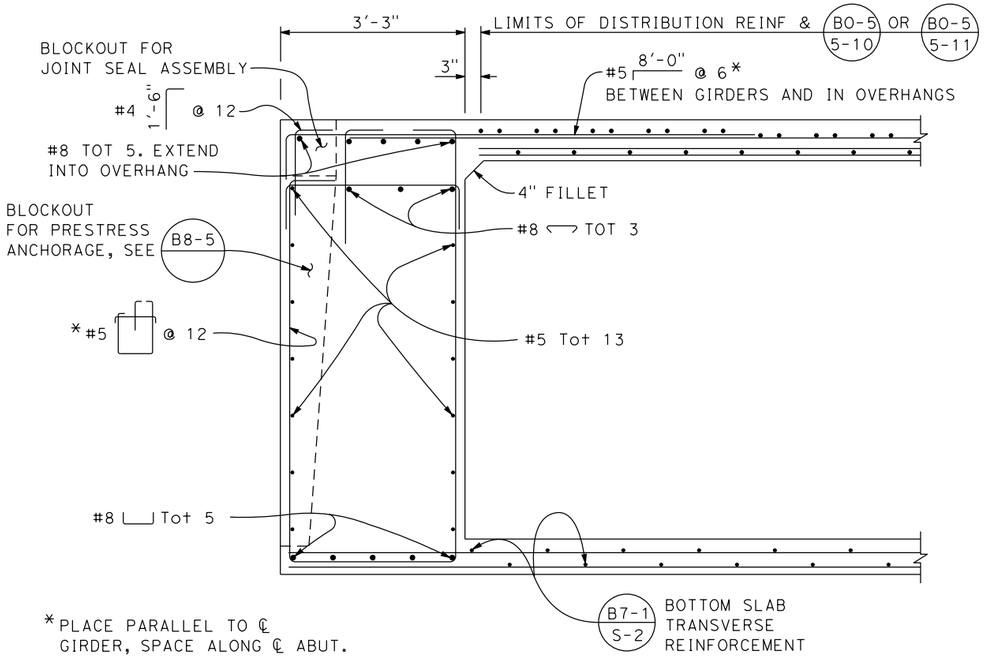

ABUTMENT 1 END DIAPHRAGM

B8-5

¾" = 1'-0"

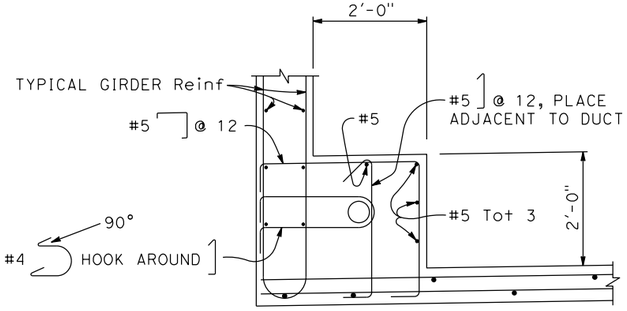

SECTION P-P

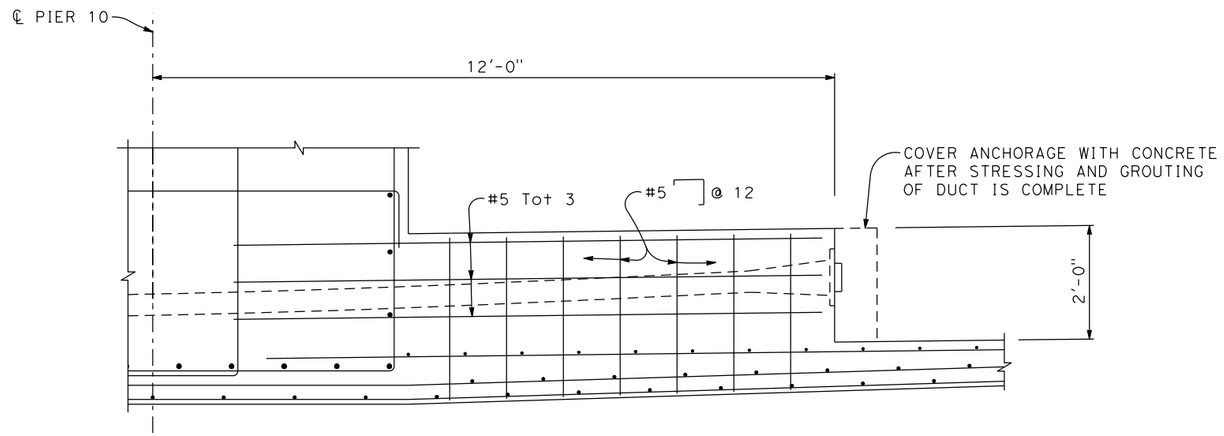

ELEVATION

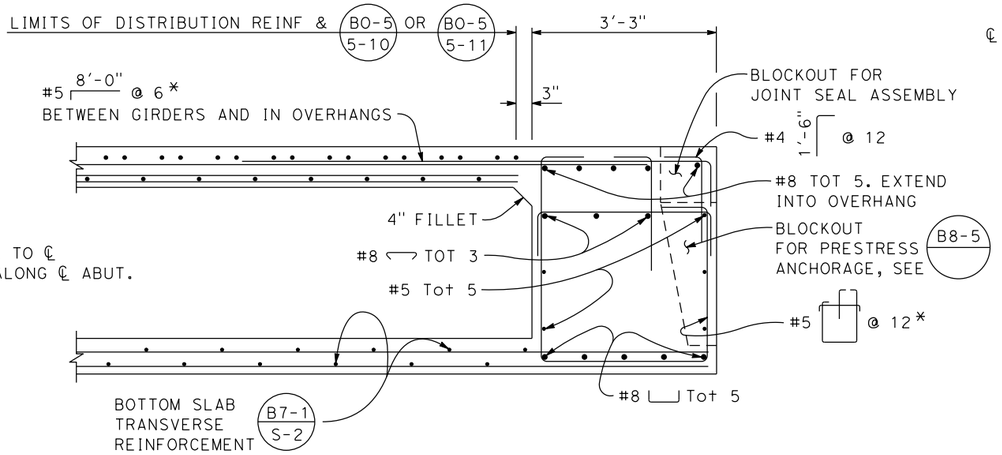

ABUTMENT 11 END DIAPHRAGM

B8-5

¾" = 1'-0"

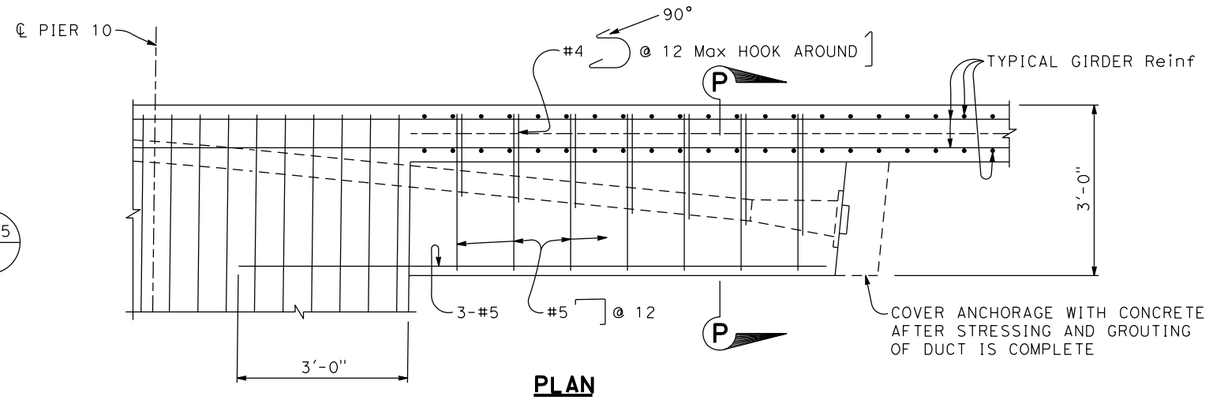

PLAN

PRESTRESSED ANCHORAGE BOLSTER DETAILS

¾" = 1'-0"

BOLSTER SHOWN ON RIGHT SIDE OF GIRDER,
LEFT SIDE BOLSTER SIMILAR BY MIRROR IMAGE.

DIST	COUNTY	ROUTE	POST MILES TOTAL PROJECT	SHEET No	TOTAL SHEETS
03	Sut/Yub	Local			

REGISTERED CIVIL ENGINEER — DATE

PLANS APPROVAL DATE

REGISTERED PROFESSIONAL ENGINEER — ROSA GRIGGS — No. 54169 — Exp. 12-31-17 — CIVIL — STATE OF CALIFORNIA

CITY OF YUBA CITY
1201 CIVIC CENTER BOULEVARD
YUBA CITY, CA 95993

Dokken Engineering
110 Blue Ravine Rd, Suite 200
Folsom, CA 95630 (916) 858-0642

DESIGN OVERSIGHT

SIGN OFF DATE

	BY	CHECKED
DESIGN	R. Griggs	T. Osterkamp
DETAILS	K. Dang	
QUANTITIES		

PREPARED FOR THE STATE OF CALIFORNIA DEPARTMENT OF TRANSPORTATION

T. Osterkamp
PROJECT ENGINEER

BRIDGE NO. 18C-0012
POST MILES

5TH STREET BRIDGE OVER FEATHER RIVER
GIRDER DETAILS NO. 2

DESIGN DETAIL SHEET (ENGLISH) (REV.7/16/10)

ORIGINAL SCALE IN INCHES FOR REDUCED PLANS 0 1 2 3

UNIT:
PROJECT NUMBER & PHASE: CONTRACT NO.:

DISREGARD PRINTS BEARING EARLIER REVISION DATES →

REVISION DATES: -

SHEET 41 OF 61

FILE => J:\1858_5th_St_BR\517\5th BRIDGE\1858GD02.dgn

USERNAME => untitled DATE PLOTTED => 8/12/2016 TIME PLOTTED => 10:50:16 AM

DIST	COUNTY	ROUTE	POST MILES TOTAL PROJECT	SHEET No	TOTAL SHEETS
03	Sut/Yub	Local			

REGISTERED CIVIL ENGINEER DATE

REGISTERED PROFESSIONAL ENGINEER
ROSA GRIGGS
No. 54169
Exp. 12-31-17
CIVIL
STATE OF CALIFORNIA

PLANS APPROVAL DATE

CITY OF YUBA CITY
1201 CIVIC CENTER BOULEVARD
YUBA CITY, CA 95993

Dokken Engineering
110 Blue Ravine Rd, Suite 200
Folsom, CA 95630 (916) 858-0642

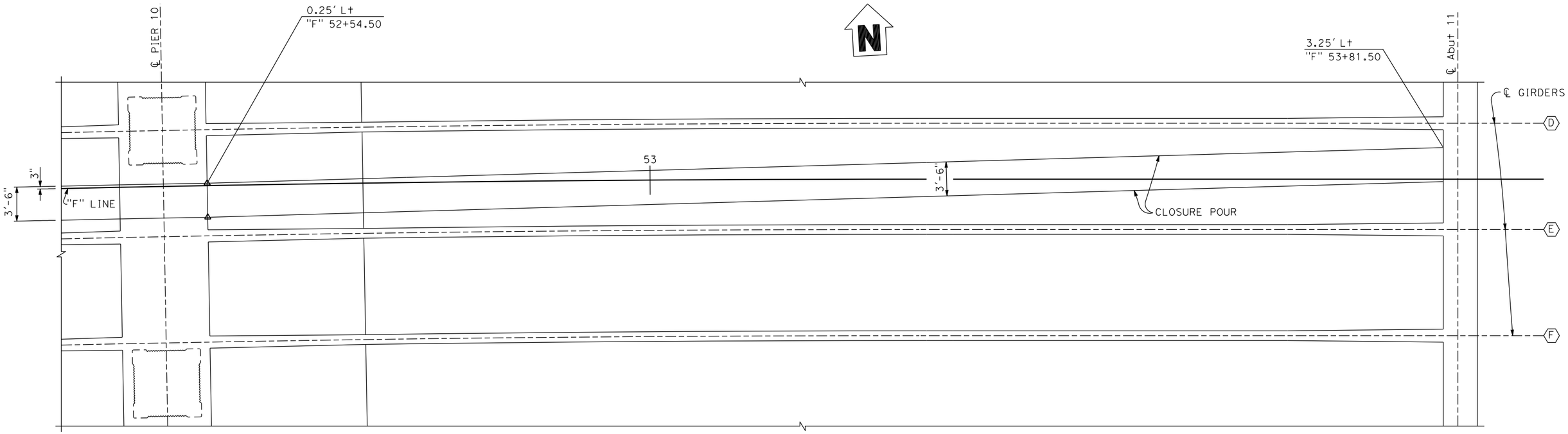

PART PLAN

1" = 5'

(CLOSURE POUR AT FRAME 3 ONLY.)

DESIGN OVERSIGHT		DESIGN	BY R. Griggs	CHECKED T. Osterkamp	PREPARED FOR THE STATE OF CALIFORNIA DEPARTMENT OF TRANSPORTATION	T. Osterkamp PROJECT ENGINEER	BRIDGE NO. 18C-0012
SIGN OFF DATE		DETAILS	BY K. Dang	CHECKED			POST MILES
		QUANTITIES	BY	CHECKED			

5TH STREET BRIDGE OVER FEATHER RIVER
CLOSURE POUR DETAILS

DESIGN DETAIL SHEET (ENGLISH) (REV.7/16/10)

ORIGINAL SCALE IN INCHES FOR REDUCED PLANS 0 1 2 3

UNIT: PROJECT NUMBER & PHASE: CONTRACT NO.:

DISREGARD PRINTS BEARING EARLIER REVISION DATES →

REVISION DATES				SHEET	OF
-				42	61

FILE => J:\1858_5th_St_BR\517\5th BRIDGE\1858GD03.dgn

USERNAME => untitled DATE PLOTTED => 8/12/2016 TIME PLOTTED => 10:50:17 AM

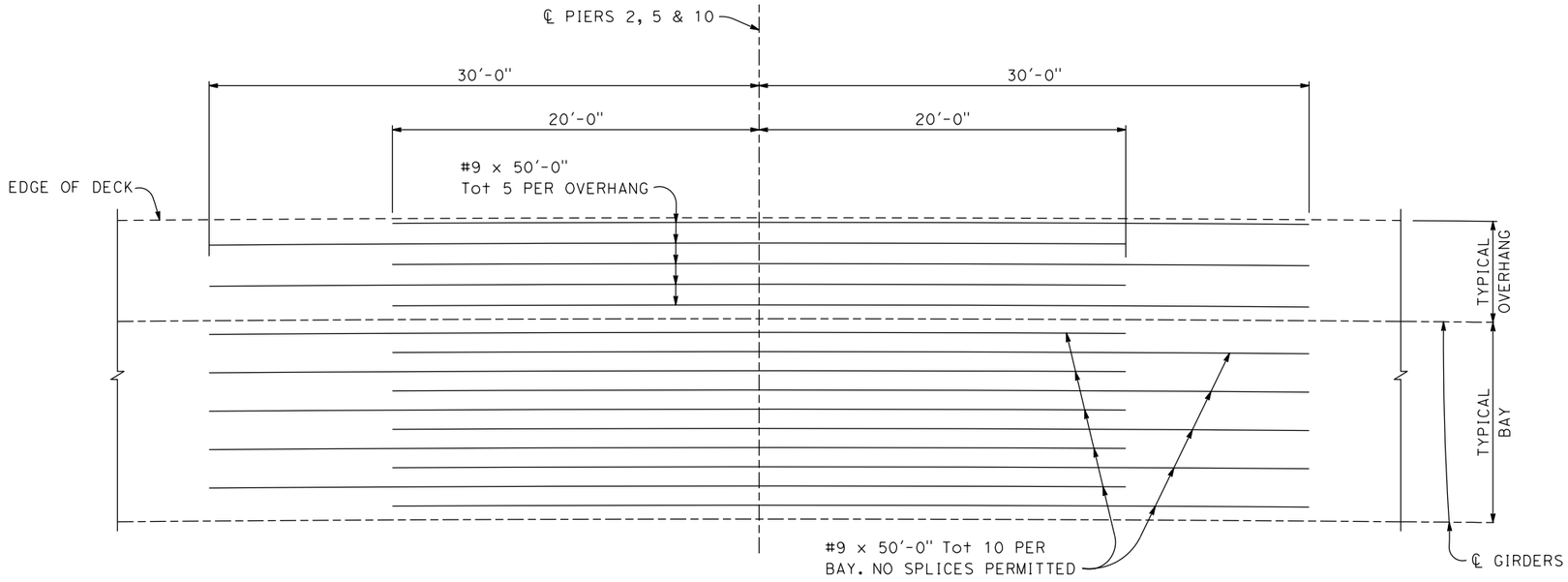

ADDITIONAL DECK REINFORCEMENT

1/4" = 1'-0"

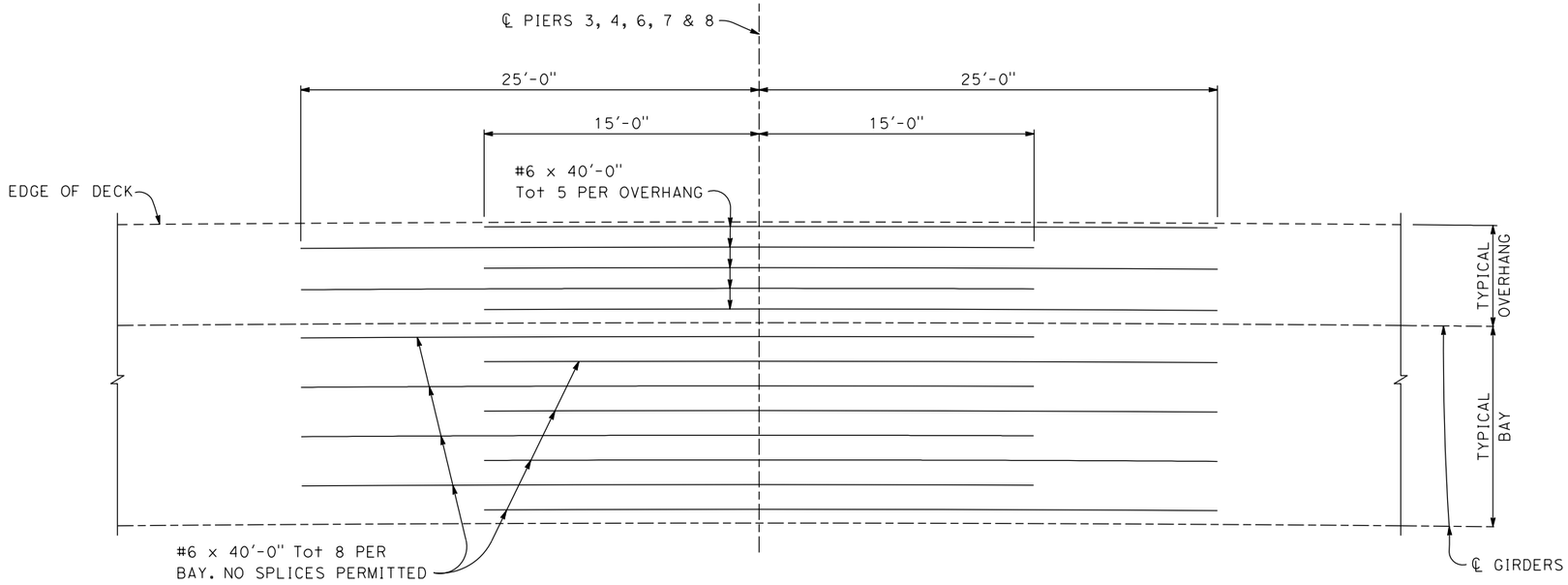

ADDITIONAL DECK REINFORCEMENT

1/4" = 1'-0"

DIST	COUNTY	ROUTE	POST MILES TOTAL PROJECT	SHEET No	TOTAL SHEETS
03	Sut/Yub	Local			

REGISTERED CIVIL ENGINEER DATE

PLANS APPROVAL DATE

REGISTERED PROFESSIONAL ENGINEER — ROSA GRIGGS — No. 54169 — Exp. 12-31-17 — CIVIL — STATE OF CALIFORNIA

CITY OF YUBA CITY
1201 CIVIC CENTER BOULEVARD
YUBA CITY, CA 95993

Dokken Engineering
110 Blue Ravine Rd, Suite 200
Folsom, CA 95630 (916) 858-0642

DESIGN OVERSIGHT

SIGN OFF DATE

	BY	CHECKED
DESIGN	R. Griggs	T. Osterkamp
DETAILS	K. Dang	
QUANTITIES		

PREPARED FOR THE STATE OF CALIFORNIA DEPARTMENT OF TRANSPORTATION

T. Osterkamp
PROJECT ENGINEER

BRIDGE NO. 18C-0012
POST MILES

5TH STREET BRIDGE OVER FEATHER RIVER
GIRDER REINFORCEMENT

DESIGN DETAIL SHEET (ENGLISH) (REV.7/16/10)

ORIGINAL SCALE IN INCHES FOR REDUCED PLANS 0 1 2 3

UNIT:
PROJECT NUMBER & PHASE: CONTRACT NO.:

DISREGARD PRINTS BEARING EARLIER REVISION DATES →

REVISION DATES				SHEET	OF
-				43	61

FILE => J:\1858_5th_St_BR\517\5th BRIDGE\1858GR01.dgn

USERNAME => untitled DATE PLOTTED => 8/12/2016 TIME PLOTTED => 10:50:17 AM

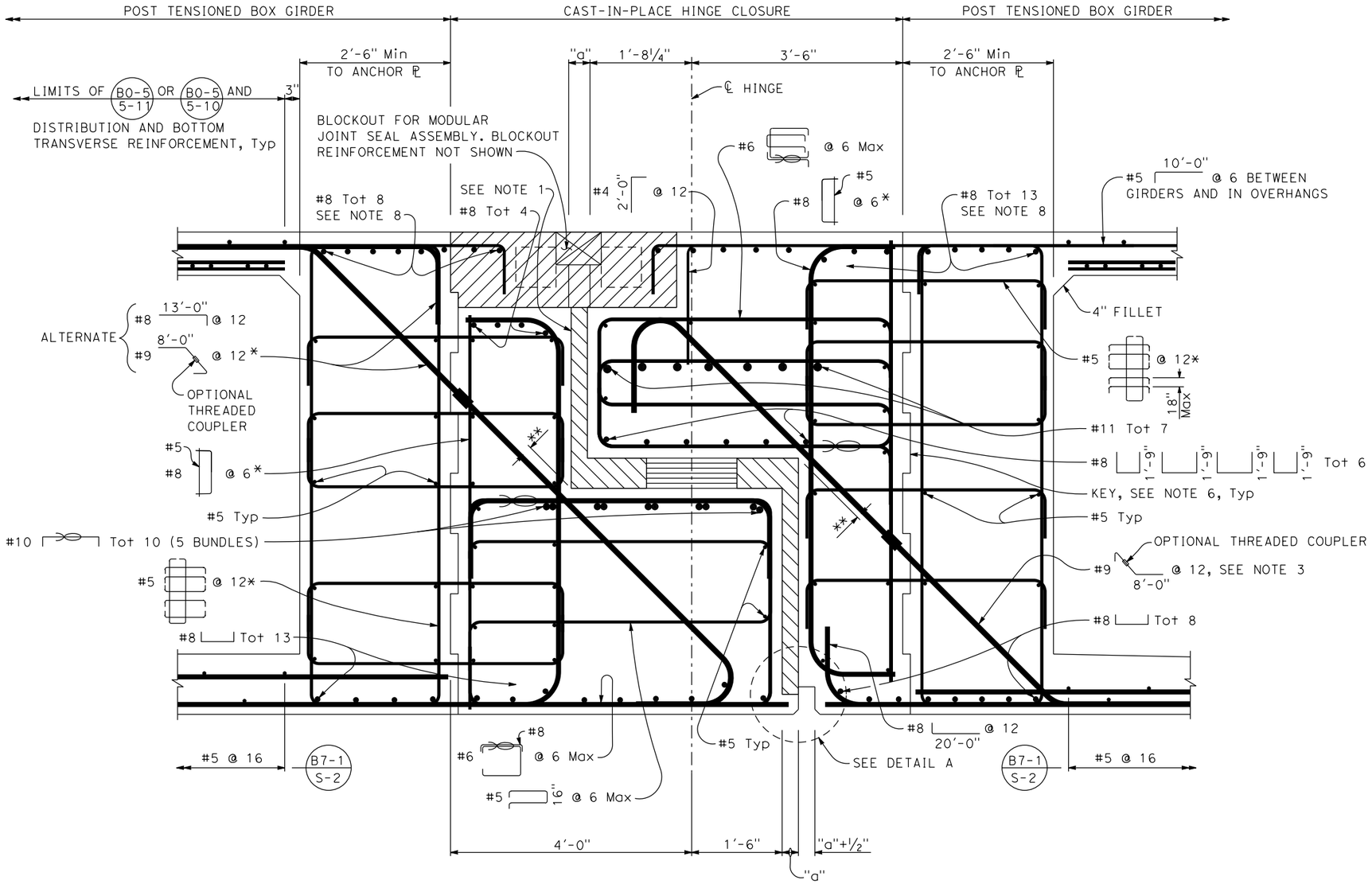

SECTION THROUGH HINGE

½" = 1'-0"

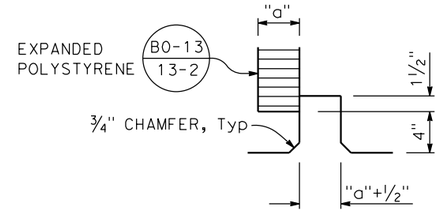

DETAIL A

NO SCALE

NOTE:

For dimension "a" see "Joint Seal - Hinge Details" sheet

NOTES:

1. See bridge details B0-13 13-1 & B0-13 13-2
2. To provide for free movement of the completed hinge, concrete is to be excluded from the joint by sealing all openings.
3. Adjust angle of bars at key to clear.
4. Reinforcement shall be spaced along ℄ of hinge and placed parallel to ℄ of structure.
5. Hooks may be rotated if required for clearance.
6. For key, see "Detail K" on "Hinge Details No. 3" sheet.
7. See B8-5 for additional details.
8. Extend reinf to edge of deck.

Denotes bundled reinf

* Fan bars to slope 2:1 @ exterior face of girders
** 1" min, typ

DIST	COUNTY	ROUTE	POST MILES TOTAL PROJECT	SHEET No	TOTAL SHEETS
03	Sut/Yub	Local			

REGISTERED CIVIL ENGINEER DATE

PLANS APPROVAL DATE

REGISTERED PROFESSIONAL ENGINEER — ROSA GRIGGS — No. 54169 — Exp. 12-31-17 — CIVIL — STATE OF CALIFORNIA

CITY OF YUBA CITY
1201 CIVIC CENTER BOULEVARD
YUBA CITY, CA 95993

Dokken Engineering
110 Blue Ravine Rd, Suite 200
Folsom, CA 95630 (916) 858-0642

DESIGN OVERSIGHT			
SIGN OFF DATE			
DESIGN	BY R. Griggs	CHECKED T. Osterkamp	
DETAILS	BY K. Dang	CHECKED	
QUANTITIES	BY	CHECKED	

PREPARED FOR THE STATE OF CALIFORNIA DEPARTMENT OF TRANSPORTATION

T. Osterkamp
PROJECT ENGINEER

BRIDGE NO. 18C-0012
POST MILES

5TH STREET BRIDGE OVER FEATHER RIVER
HINGE DETAILS NO. 1

DESIGN DETAIL SHEET (ENGLISH) (REV.7/16/10)

ORIGINAL SCALE IN INCHES FOR REDUCED PLANS 0 1 2 3

UNIT:
PROJECT NUMBER & PHASE: CONTRACT NO.:

DISREGARD PRINTS BEARING EARLIER REVISION DATES →

REVISION DATES				SHEET	OF
-				44	61

FILE => J:\1858_5th_St_BR\517\5th BRIDGE\1858HD01.dgn

USERNAME => untitled DATE PLOTTED => 8/12/2016 TIME PLOTTED => 10:50:19 AM

DIST	COUNTY	ROUTE	POST MILES TOTAL PROJECT	SHEET No	TOTAL SHEETS
03	Sut/Yub	Local			

REGISTERED CIVIL ENGINEER DATE

PLANS APPROVAL DATE

REGISTERED PROFESSIONAL ENGINEER — ROSA GRIGGS — No. 54169 — Exp. 12-31-17 — CIVIL — STATE OF CALIFORNIA

CITY OF YUBA CITY
1201 CIVIC CENTER BOULEVARD
YUBA CITY, CA 95993

Dokken Engineering
110 Blue Ravine Rd, Suite 200
Folsom, CA 95630 (916) 858-0642

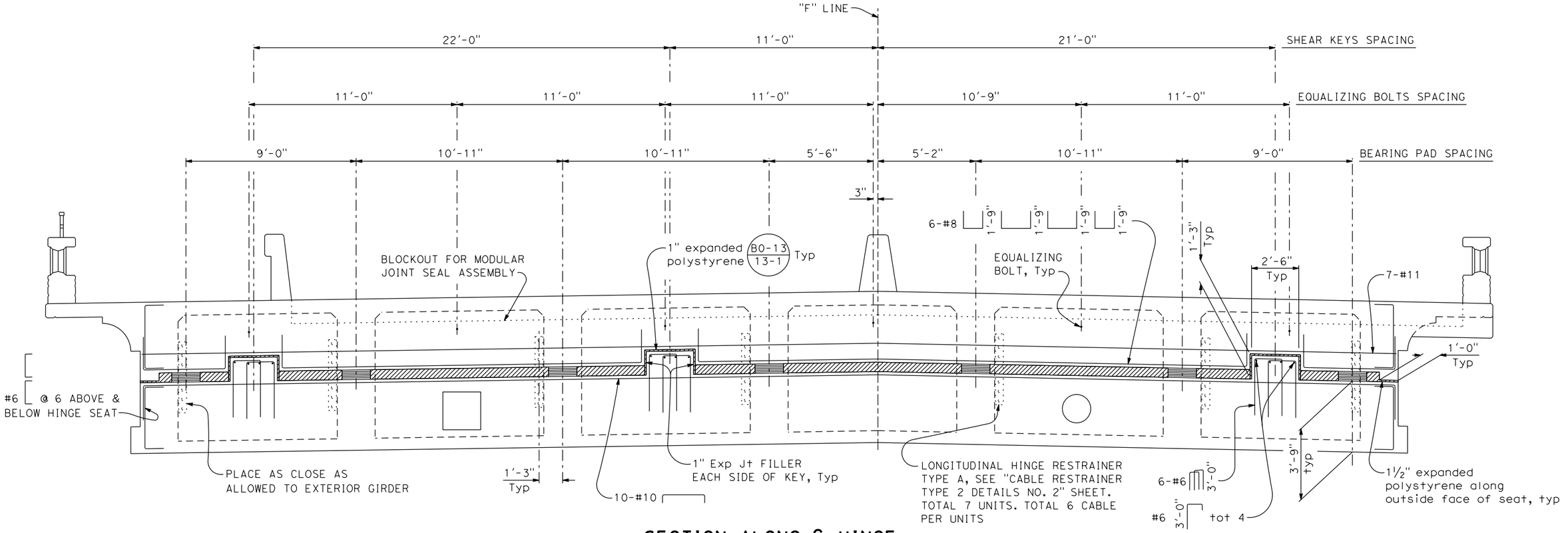

SECTION ALONG ℄ HINGE

3/8" = 1'-0"

DESIGN OVERSIGHT

SIGN OFF DATE

	BY	CHECKED
DESIGN	R. Griggs	T. Osterkamp
DETAILS	K. Dang	
QUANTITIES		

PREPARED FOR THE STATE OF CALIFORNIA DEPARTMENT OF TRANSPORTATION

T. Osterkamp
PROJECT ENGINEER

BRIDGE NO. 18C-0012
POST MILES

5TH STREET BRIDGE OVER FEATHER RIVER
HINGE DETAILS NO. 2

DESIGN DETAIL SHEET (ENGLISH) (REV.7/16/10)

ORIGINAL SCALE IN INCHES FOR REDUCED PLANS 0 1 2 3

UNIT:
PROJECT NUMBER & PHASE:
CONTRACT NO.:

DISREGARD PRINTS BEARING EARLIER REVISION DATES →

REVISION DATES					SHEET	OF
-					45	61

FILE => J:\1858_5th_St_BR\517\5th BRIDGE\1858HD02.dgn

USERNAME => untitled DATE PLOTTED => 8/12/2016 TIME PLOTTED => 10:50:20 AM

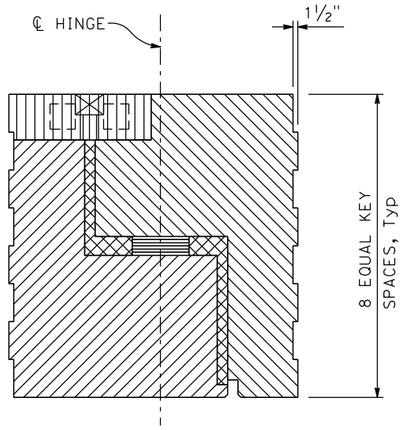

INDICATES BLOCKOUT & CLOSURE POUR FOR JOINT SEAL

INDICATES CAST-IN-PLACE CONCRETE TO BE PLACED AFTER BOTH FRAMES HAVE BEEN PRESTRESSED. CONCRETE TO BE SAME STRENGTH GRADE AS CAST-IN-PLACE PRESTRESSED CONCRETE.

INDICATES CAST-IN-PLACE CONCRETE TO BE PLACED AFTER SUPPORTING SIDE OF HINGE IS CONSTRUCTED & BEARINGS ARE PROPERLY POSITIONED. CONCRETE TO BE SAME STRENGTH GRADE AS CAST-IN-PLACE PRESTRESSED CONCRETE. FALSEWORK SHALL REMAIN IN PLACE UNTIL CONCRETE HAS ATTAINED A STRENGTH OF AT LEAST 3000 PSI.

EXPANDED POLYSTYRENE

DETAIL K

½" = 1'-0"

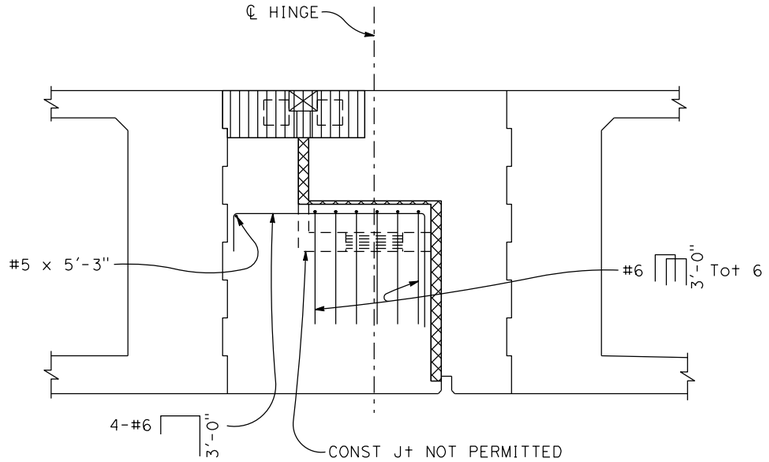

SECTION A-A

½" = 1'-0"

DIST	COUNTY	ROUTE	POST MILES TOTAL PROJECT	SHEET No	TOTAL SHEETS
03	Sut/Yub	Local			

REGISTERED CIVIL ENGINEER DATE

PLANS APPROVAL DATE

REGISTERED PROFESSIONAL ENGINEER — ROSA GRIGGS — No. 54169 — Exp. 12-31-17 — CIVIL — STATE OF CALIFORNIA

CITY OF YUBA CITY
1201 CIVIC CENTER BOULEVARD
YUBA CITY, CA 95993

Dokken Engineering
110 Blue Ravine Rd, Suite 200
Folsom, CA 95630 (916) 858-0642

LOCATION	"b"		
	WINTER	SPRING /FALL	SUMMER
HINGE	3"	4½"	5½"

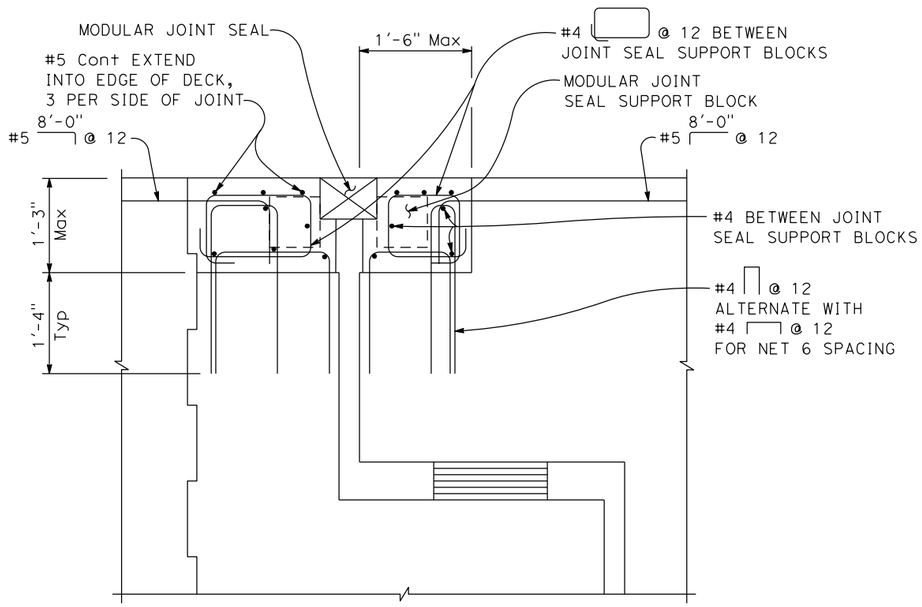

BLOCKOUT REINFORCEMENT

NO SCALE

NOTES:

Blockout reinforcing may be manipulated as necessary to accommodate installation of the joint seal assembly upon approval of the joint shop plans and as directed by the engineer.

For blockout reinforcement in deck overhang, see "Hinge Joint Seal Details (MR>4")" sheet.

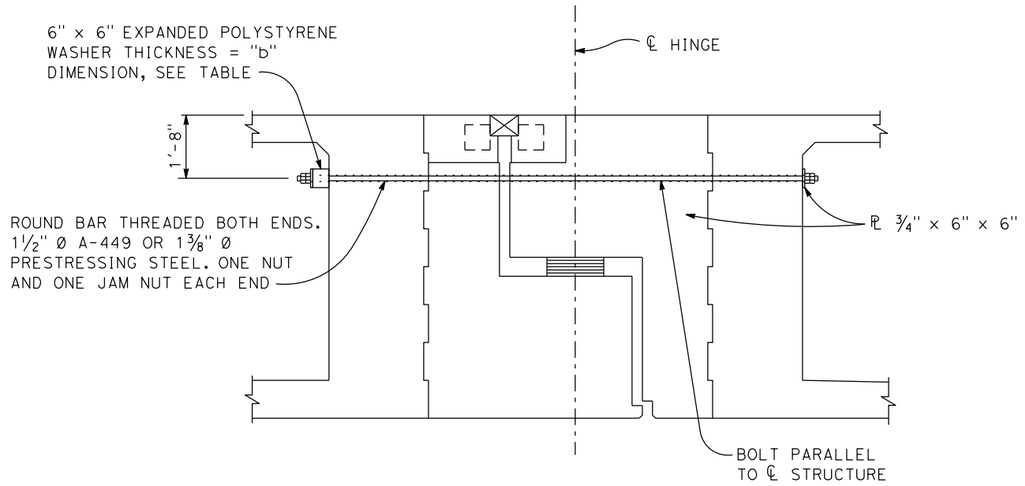

EQUALIZING BOLT DETAIL

½" = 1'-0"

DESIGN OVERSIGHT		DESIGN	BY R. Griggs	CHECKED T. Osterkamp	PREPARED FOR THE STATE OF CALIFORNIA DEPARTMENT OF TRANSPORTATION
SIGN OFF DATE		DETAILS	BY K. Dang	CHECKED	
		QUANTITIES	BY	CHECKED	

T. Osterkamp
PROJECT ENGINEER

BRIDGE NO. 18C-0012
POST MILES

5TH STREET BRIDGE OVER FEATHER RIVER
HINGE DETAILS NO. 3

DESIGN DETAIL SHEET (ENGLISH) (REV.7/16/10)

ORIGINAL SCALE IN INCHES FOR REDUCED PLANS 0 1 2 3

UNIT:
PROJECT NUMBER & PHASE: CONTRACT NO.:

DISREGARD PRINTS BEARING EARLIER REVISION DATES →

REVISION DATES: - | | | | |

SHEET 46 OF 61

FILE => J:\1858_5th_St_BR\517\5th BRIDGE\1858HD03.dgn

USERNAME => untitled DATE PLOTTED => 8/12/2016 TIME PLOTTED => 10:50:20 AM

DIST	COUNTY	ROUTE	POST MILES TOTAL PROJECT	SHEET No	TOTAL SHEETS
03	Sut/Yub	Local			

REGISTERED CIVIL ENGINEER _____ DATE _____

PLANS APPROVAL DATE _____

REGISTERED PROFESSIONAL ENGINEER
ROSA GRIGGS
No. 54169
Exp. 12-31-17
CIVIL
STATE OF CALIFORNIA

CITY OF YUBA CITY
1201 CIVIC CENTER BOULEVARD
YUBA CITY, CA 95993

Dokken Engineering
110 Blue Ravine Rd, Suite 200
Folsom, CA 95630 (916) 858-0642

NOTES:

1. Cable Restrainer Pipes must be 2½" std galvanized pipe. The Pipes must be aligned to form a straight line the entire length of the restrainers and must be parallel to the ℄ girder. The pipes must not extend beyond the concrete faces and shall have smooth edges to prevent damage to restrainers. During construction pipe ends shall be capped to prevent debris intrusion.
2. Anchorage surface must be perpendicular to the girder.
3. For View A-A, Section B-B and Anchorage details see: XS7-050-2, "Cable Restrainer Type 2 Details No.2 (New)" sheet.
4. For Cable Restrainer and Hardware details see: XS7-090, "Cable Restrainer Hardware Details" sheet.
5. Reinforcement not shown.

(1) Place pipes 2" clear from main hinge reinforcement.

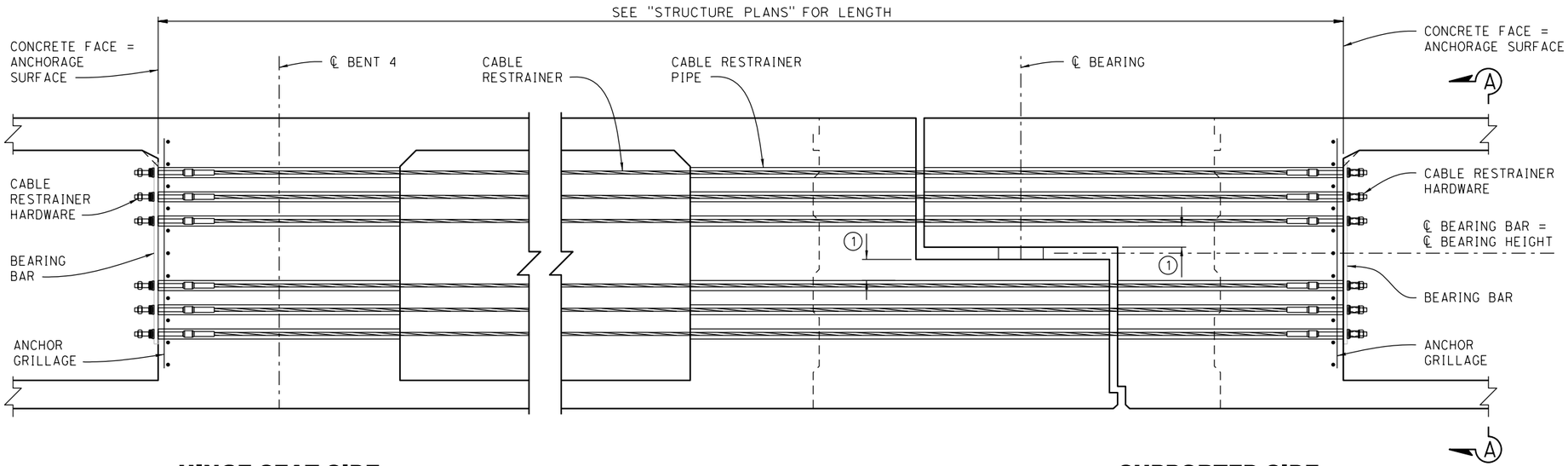

HINGE SEAT SIDE **SUPPORTED SIDE**

CABLE HINGE RESTRAINER TYPE 2-A

¾" = 1'-0"

DESIGN OVERSIGHT		DESIGN	BY R. Griggs	CHECKED T. Osterkamp	PREPARED FOR THE STATE OF CALIFORNIA DEPARTMENT OF TRANSPORTATION	T. Osterkamp PROJECT ENGINEER	BRIDGE NO. 18C-0012	5TH STREET BRIDGE OVER FEATHER RIVER
SIGN OFF DATE		DETAILS	BY K. Dang	CHECKED			POST MILES	CABLE RESTRAINER DETAILS NO. 1
DESIGN DETAIL SHEET (ENGLISH) (REV.7/16/10)		QUANTITIES	BY	CHECKED	ORIGINAL SCALE IN INCHES FOR REDUCED PLANS 0 1 2 3	UNIT: PROJECT NUMBER & PHASE: CONTRACT NO.:	DISREGARD PRINTS BEARING EARLIER REVISION DATES →	REVISION DATES -	SHEET 47	OF 61

FILE => J:\1858_5th_St_BR\517\5th BRIDGE\1858HD04.dgn

USERNAME => untitled DATE PLOTTED => 8/12/2016 TIME PLOTTED => 10:50:21 AM

DIST	COUNTY	ROUTE	POST MILES TOTAL PROJECT	SHEET No	TOTAL SHEETS
03	Sut/Yub	Local			

REGISTERED CIVIL ENGINEER _____ DATE _____

PLANS APPROVAL DATE _____

REGISTERED PROFESSIONAL ENGINEER
ROSA GRIGGS
No. 54169
Exp. 12-31-17
CIVIL
STATE OF CALIFORNIA

CITY OF YUBA CITY
1201 CIVIC CENTER BOULEVARD
YUBA CITY, CA 95993

Dokken Engineering
110 Blue Ravine Rd, Suite 200
Folsom, CA 95630 (916) 858-0642

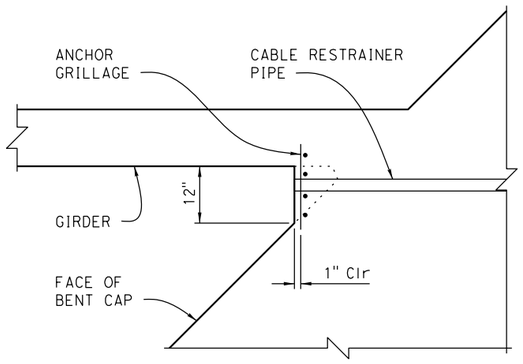

ACUTE AND PERPENDICULAR CORNER

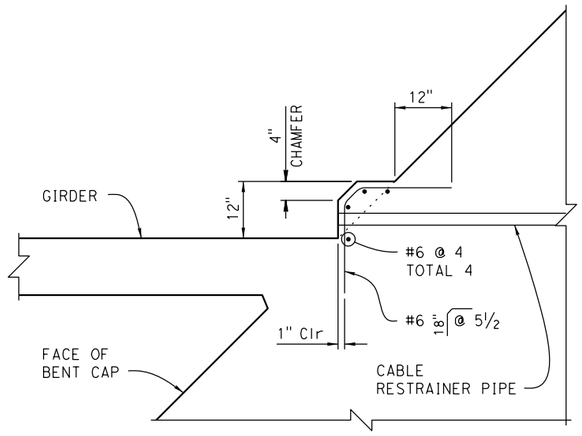

OBTUSE CORNER

NOTES:

1. The ℄ Cable Restrainers must match the slope of the Girder ℄.
2. Adjust Anchorage reinforcement to clear Girder, Cap and Hinge reinforcement.
3. For Details not shown, see "CABLE RESTRAINER TYPE 2 DETAILS NO. 1" sheet.

ANCHORAGE REINFORCEMENT PLAN

¾" = 1'-0"

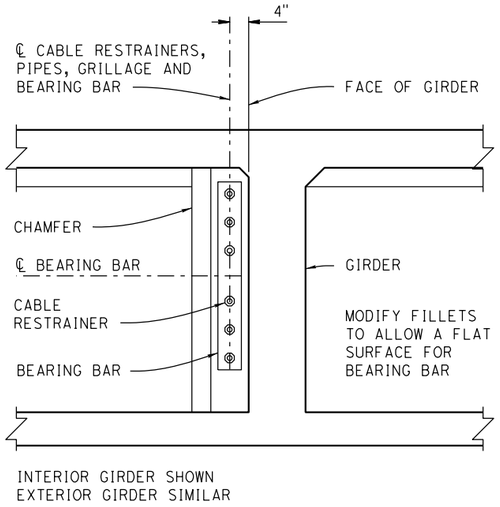

VIEW A-A

¾" = 1'-0"

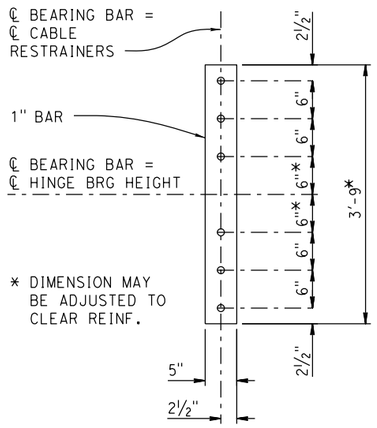

BEARING BAR

1" = 1'-0"

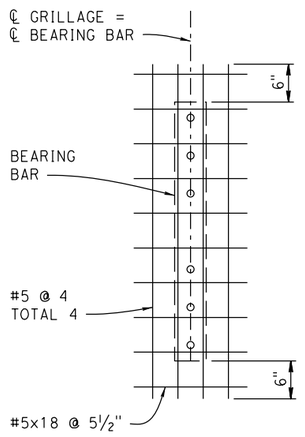

ANCHOR GRILLAGE

1" = 1'-0"

DESIGN OVERSIGHT		DESIGN	BY R. Griggs	CHECKED T. Osterkamp	PREPARED FOR THE STATE OF CALIFORNIA DEPARTMENT OF TRANSPORTATION	T. Osterkamp PROJECT ENGINEER	BRIDGE NO. 18C-0012 / POST MILES	5TH STREET BRIDGE OVER FEATHER RIVER
SIGN OFF DATE		DETAILS	BY K. Dang	CHECKED				CABLE RESTRAINER DETAILS NO. 2
		QUANTITIES	BY	CHECKED				

DESIGN DETAIL SHEET (ENGLISH) (REV.7/16/10)

ORIGINAL SCALE IN INCHES FOR REDUCED PLANS 0 1 2 3

UNIT:
PROJECT NUMBER & PHASE: CONTRACT NO.:

DISREGARD PRINTS BEARING EARLIER REVISION DATES →

REVISION DATES				SHEET	OF
-				48	61

FILE => J:\1858_5th_St_BR\517\5th BRIDGE\1858HD05.dgn

USERNAME => untitled DATE PLOTTED => 8/12/2016 TIME PLOTTED => 10:50:21 AM

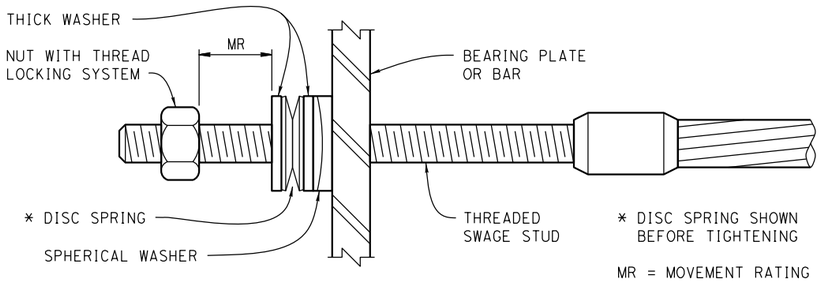

DISC SPRING HARDWARE

6" = 1'-0"

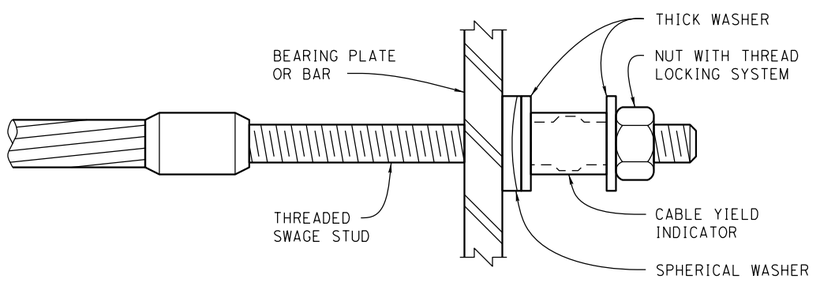

CABLE YIELD INDICATOR HARDWARE

6" = 1'-0"

DIST	COUNTY	ROUTE	POST MILES TOTAL PROJECT	SHEET No	TOTAL SHEETS
03	Sut/Yub	Local			

REGISTERED CIVIL ENGINEER DATE

PLANS APPROVAL DATE

REGISTERED PROFESSIONAL ENGINEER — ROSA GRIGGS — No. 54169 — Exp. 12-31-17 — CIVIL — STATE OF CALIFORNIA

CITY OF YUBA CITY
1201 CIVIC CENTER BOULEVARD
YUBA CITY, CA 95993

Dokken Engineering
110 Blue Ravine Rd, Suite 200
Folsom, CA 95630 (916) 858-0642

NOTES:

1. Place the Cable Yield Indicator hardware on the Supported side of the Hinge. Place the Disc Spring hardware on the Hinge Seat side.
2. All exposed, non-painted hardware must be galvanized. Dimensions shown are before galvanizing except as noted.
3. Nuts must not be set until after the completion of prestressing for CIP prestressed bridges.
4. In corrosive environments, add a Locking Nut instead of the Thread Locking System.

RESTRAINER UNIT INSTALLATION PROCEDURE

For typical straight Restrainers, girder to opposite girder alignment:

1. Install Spherical Washers, Thick Washers, Cable Yield Indicator, and Nut with Thread Locking System on the Supported side.
2. Install Spherical Washers, Thick Washers, Disc Spring, and Nut on the Hinge Seat side.
3. Tighten the nuts on the Hinge Seat side of restrainer units until the Disc Springs collapse and there is no gap remaining between the discs.
4. Place thread locking system on the threaded stud and back off the nut from the Disc Spring a distance equal to the maximum additional amount that the hinge is expected to open, relative to existing ambient conditions, for the Movement Rating (MR) as shown on the Structure plans.

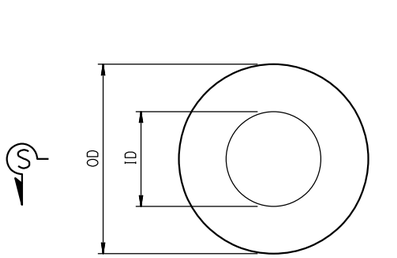

END VIEW

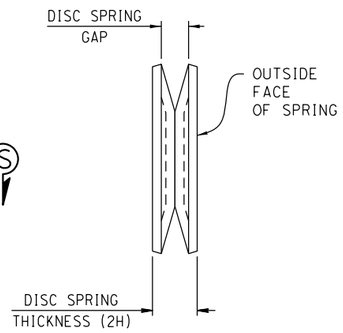

ASSEMBLED SPRING

Before Nut Tightening

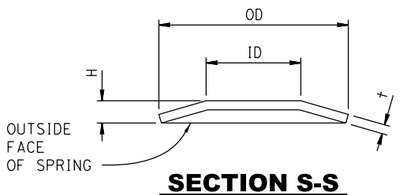

SECTION S-S

Single Disc

DISC SPRING

1" = 1"

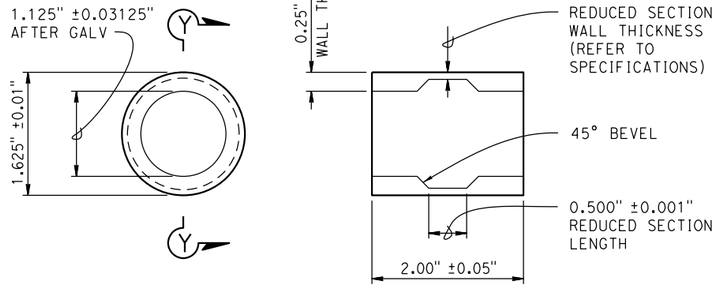

END VIEW

SECTION Y-Y

CABLE YIELD INDICATOR

1" = 1"

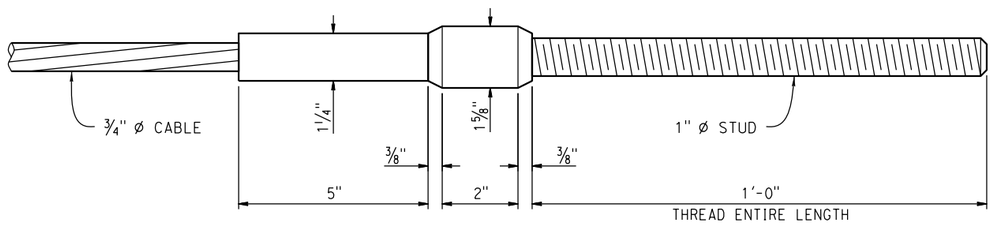

CABLE END SWAGE STUD DETAIL

6" = 1'-0"

DISC SPRING AND WASHER DIMENSIONS

RESTRAINER LENGTH	DISC SPRING					SPHERICAL WASHER			THICK WASHER		
L (ft)	ID	OD	t	H	COLOR CODE	ID	OD	NOMINAL THICKNESS	ID	OD	t (min)
00.0 - 25.0	1.125	2.00	0.065	0.130	WHITE	1.125	2.00	0.75	1.125	2.00	0.25
25.1 - 31.9	1.125	2.00	0.084	0.136	RED	1.125	2.00	0.75	1.125	2.00	0.25
32.0 - 37.9	1.125	2.00	0.097	0.145	BLUE	1.125	2.00	0.75	1.125	2.00	0.25
37.9 < L	1.125	2.50	0.120	0.180	YELLOW	1.125	2.50	0.75	1.125	2.50	0.25

Restrainer Length (L) :
Use effective cable length, measured from the outer faces of Bearing Plates or Bar.
See Bridge detail sheets for approximate length.

Use ASTM F436, Standard Specification for Hardened Steel Washers for all OD and ID dimensions for washers and disc springs.

Dimensions are inches unless otherwise noted.

DESIGN OVERSIGHT

SIGN OFF DATE

	BY	CHECKED
DESIGN	R. Griggs	T. Osterkamp
DETAILS	K. Dang	
QUANTITIES		

PREPARED FOR THE STATE OF CALIFORNIA DEPARTMENT OF TRANSPORTATION

T. Osterkamp
PROJECT ENGINEER

BRIDGE NO. 18C-0012
POST MILES

5TH STREET BRIDGE OVER FEATHER RIVER
CABLE RESTRAINER DETAILS

DESIGN DETAIL SHEET (ENGLISH) (REV.7/16/10)

ORIGINAL SCALE IN INCHES FOR REDUCED PLANS 0 1 2 3

UNIT:
PROJECT NUMBER & PHASE: CONTRACT NO.:

DISREGARD PRINTS BEARING EARLIER REVISION DATES

REVISION DATES: -

SHEET 49 OF 61

FILE => J:\1858_5th_St_BR\517\5th BRIDGE\1858HD06.dgn

USERNAME => untitled DATE PLOTTED => 8/12/2016 TIME PLOTTED => 10:50:21 AM

DIST	COUNTY	ROUTE	POST MILES TOTAL PROJECT	SHEET No	TOTAL SHEETS
03	Sut/Yub	Local			

REGISTERED CIVIL ENGINEER _____ DATE _____

PLANS APPROVAL DATE _____

REGISTERED PROFESSIONAL ENGINEER — ROSA GRIGGS — No. 54169 — Exp. 12-31-17 — CIVIL — STATE OF CALIFORNIA

CITY OF YUBA CITY
1201 CIVIC CENTER BOULEVARD
YUBA CITY, CA 95993

Dokken Engineering
110 Blue Ravine Rd, Suite 200
Folsom, CA 95630 (916) 858-0642

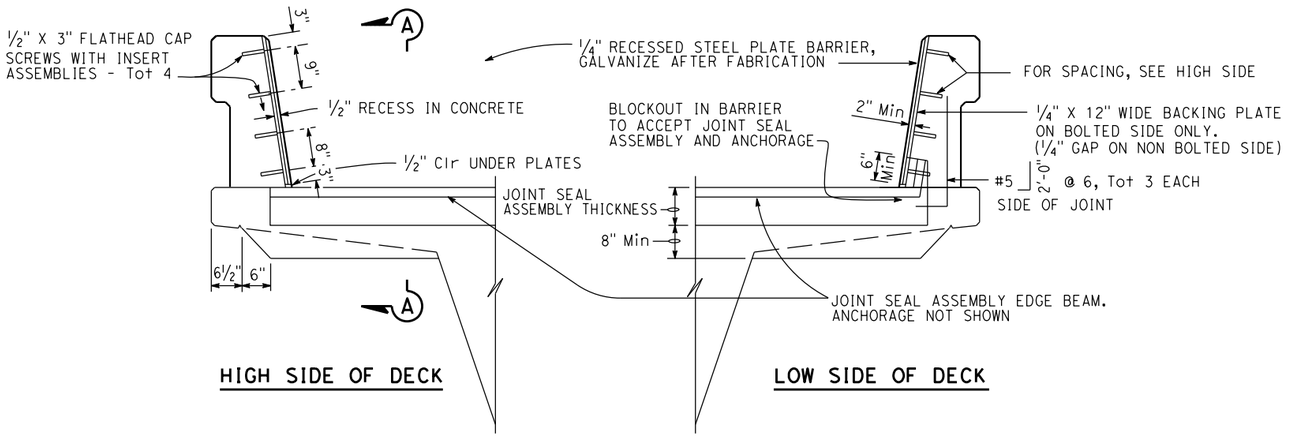

SEAL INSTALLATION

¾" = 1'-0"

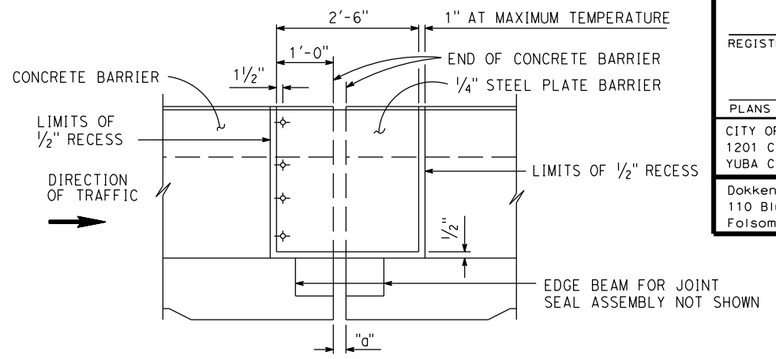

ELEVATION A-A

¾" = 1'-0"

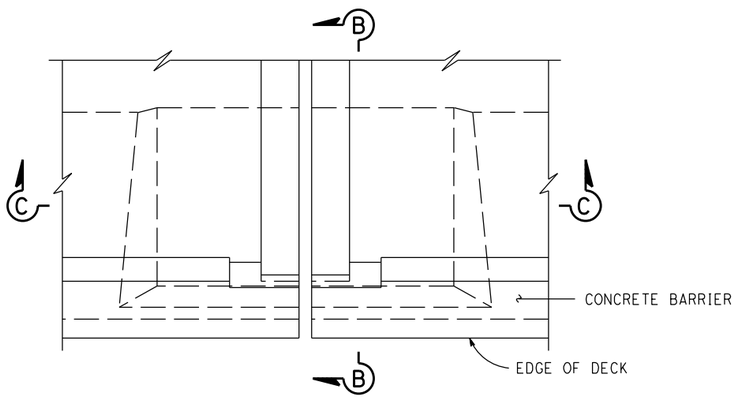

PLAN - DECK JOINT

¾" = 1'-0"

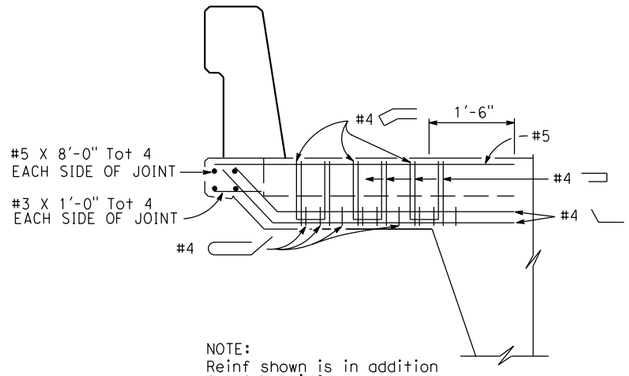

NOTE:
Reinf shown is in addition to slab reinf

SECTION B-B

¾" = 1'-0"

JOINT INFORMATION		"a" DIMENSIONS			
LOCATION	MOVEMENT RATING (MR)	SKEW	WINTER	SPRING & FALL	SUMMER

NOTE:
For details not shown, see Project Plans

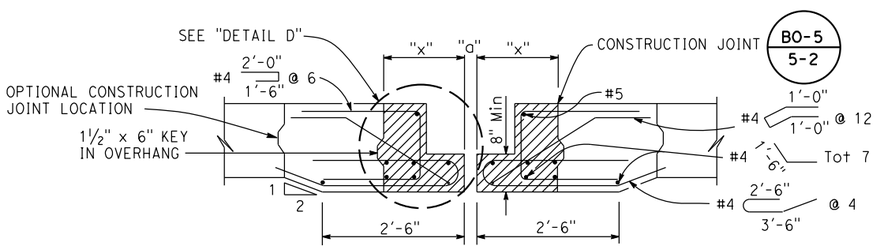

SECTION C-C

¾" = 1'-0"

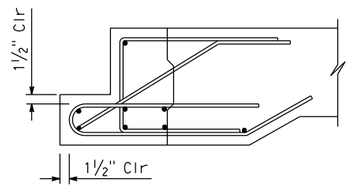

DETAIL D

1" = 1'-0"

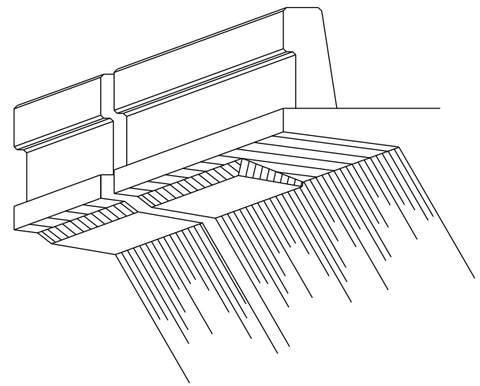

DECK OVERHANG AT HINGE

NO SCALE

DESIGN OVERSIGHT		DESIGN	BY R. Griggs	CHECKED T. Osterkamp	PREPARED FOR THE STATE OF CALIFORNIA DEPARTMENT OF TRANSPORTATION	T. Osterkamp PROJECT ENGINEER	BRIDGE NO. 18C-0012
SIGN OFF DATE		DETAILS	BY K. Dang	CHECKED			POST MILES
		QUANTITIES	BY	CHECKED			

5TH STREET BRIDGE OVER FEATHER RIVER

JOINT SEAL - HINGE DETAILS

MOVEMENT RATING GREATER THAN 4"

DESIGN DETAIL SHEET (ENGLISH) (REV.7/16/10)

ORIGINAL SCALE IN INCHES FOR REDUCED PLANS 0 1 2 3

UNIT: PROJECT NUMBER & PHASE: CONTRACT NO.:

DISREGARD PRINTS BEARING EARLIER REVISION DATES →

REVISION DATES				SHEET	OF
-				50	61

FILE => J:\1858_5th_St_BR\517\5th BRIDGE\1858HDJS.dgn

USERNAME => untitled DATE PLOTTED => 8/12/2016 TIME PLOTTED => 10:50:22 AM

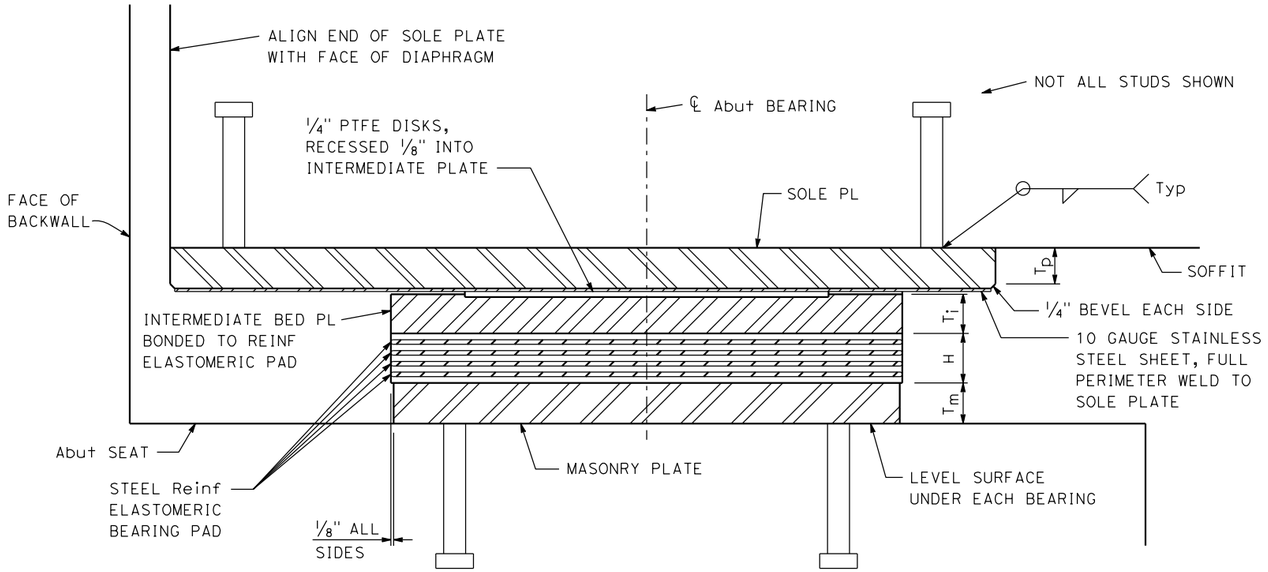

SECTION A-A

NO SCALE

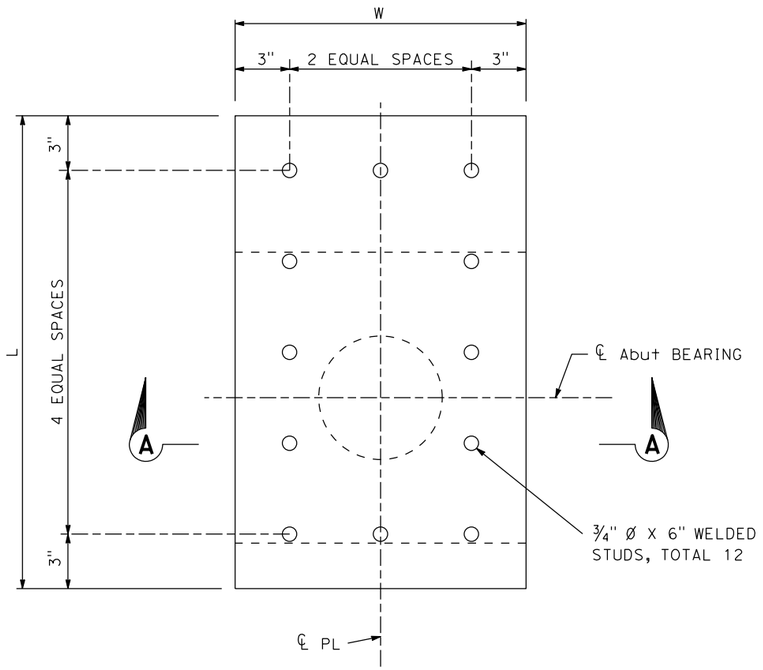

SOLE PLATE PLAN

NO SCALE

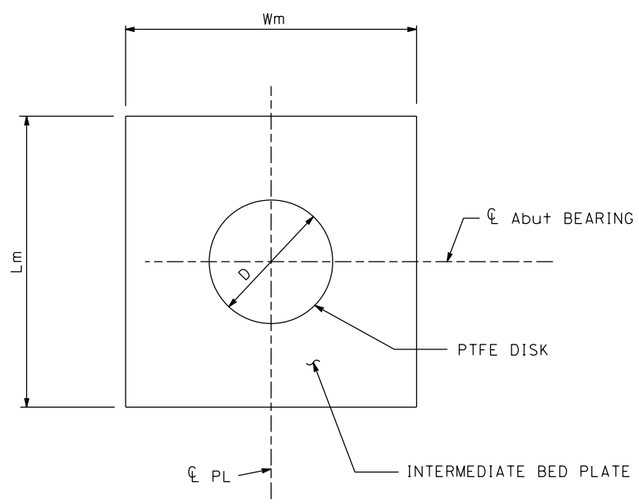

INTERMEDIATE PLATE PLAN

NO SCALE

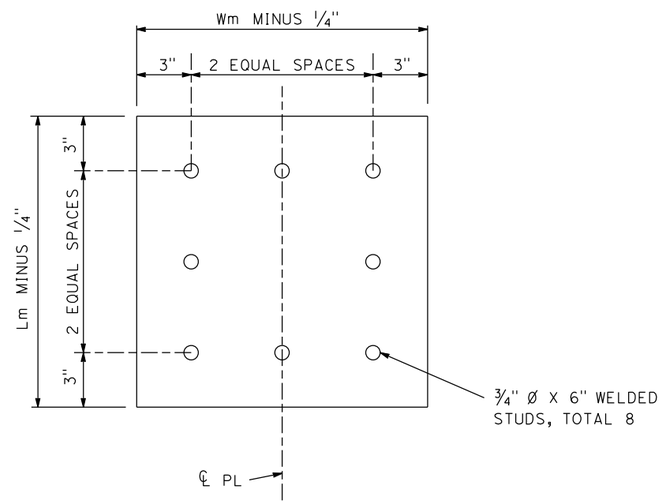

MASONRY PLATE PLAN

NO SCALE

NOTES:

1. Elastomeric bearing pad plan dimensions same as Masonry PL.
2. See Abutment Layout sheets for orientation of plates and elastomeric bearing pads.
3. Elastomer thickness only.

EXPANSION BEARING TABLE

LOCATION	MAXIMUM VERTICAL LOAD (kips)	MINIMUM DEAD LOAD (kips)	SOLE PLATE			INTERMEDIATE BED PLATE		MASONRY PLATE			BEARING PAD (NOTE 3)	TOTAL NUMBER OF UNITS
			T_p	W	L	T_i	D	T_m	W_m	L_m	H	
Abut 1	273	160	2"	20"	36"	1½"	10.5"	¾"	18"	18"	4"	7
Abut 11	273	160	2"	20"	36"	1½"	10.5"	¾"	18"	18"	4"	7

DIST	COUNTY	ROUTE	POST MILES TOTAL PROJECT	SHEET No	TOTAL SHEETS
03	Sut/Yub	Local			

REGISTERED CIVIL ENGINEER — DATE

REGISTERED PROFESSIONAL ENGINEER — ROSA GRIGGS — No. 54169 — Exp. 12-31-17 — CIVIL — STATE OF CALIFORNIA

PLANS APPROVAL DATE

CITY OF YUBA CITY
1201 CIVIC CENTER BOULEVARD
YUBA CITY, CA 95993

Dokken Engineering
110 Blue Ravine Rd, Suite 200
Folsom, CA 95630 (916) 858-0642

DESIGN OVERSIGHT

SIGN OFF DATE

	BY	CHECKED
DESIGN	R. Griggs	T. Osterkamp
DETAILS	K. Dang	
QUANTITIES		

PREPARED FOR THE STATE OF CALIFORNIA DEPARTMENT OF TRANSPORTATION

T. Osterkamp
PROJECT ENGINEER

BRIDGE NO. 18C-0012
POST MILES

5TH STREET BRIDGE OVER FEATHER RIVER

PTFE/ELASTOMERIC EXPANSION BEARING DETAILS

DESIGN DETAIL SHEET (ENGLISH) (REV.7/16/10)

ORIGINAL SCALE IN INCHES FOR REDUCED PLANS 0 1 2 3

UNIT:
PROJECT NUMBER & PHASE:
CONTRACT NO.:

DISREGARD PRINTS BEARING EARLIER REVISION DATES →

REVISION DATES				SHEET	OF
-				51	61

FILE => J:\1858_5th_St_BR\517\5th BRIDGE\1858PTFE01.dgn

USERNAME => unTitled DATE PLOTTED => 8/12/2016 TIME PLOTTED => 10:50:18 AM

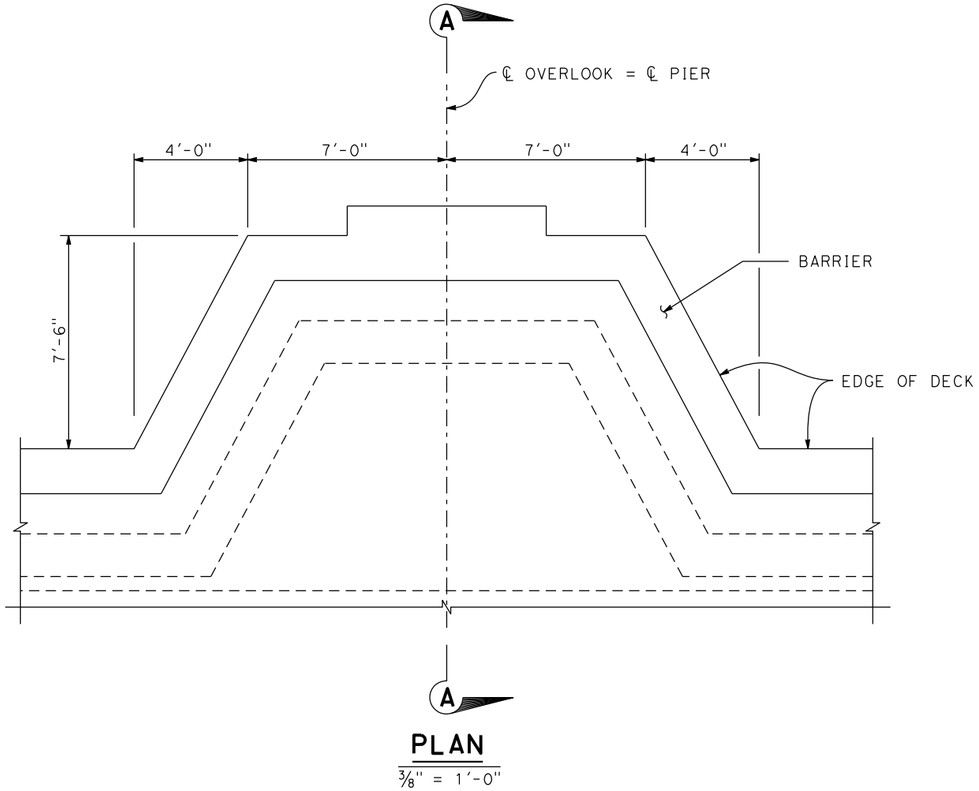

PLAN
3/8" = 1'-0"

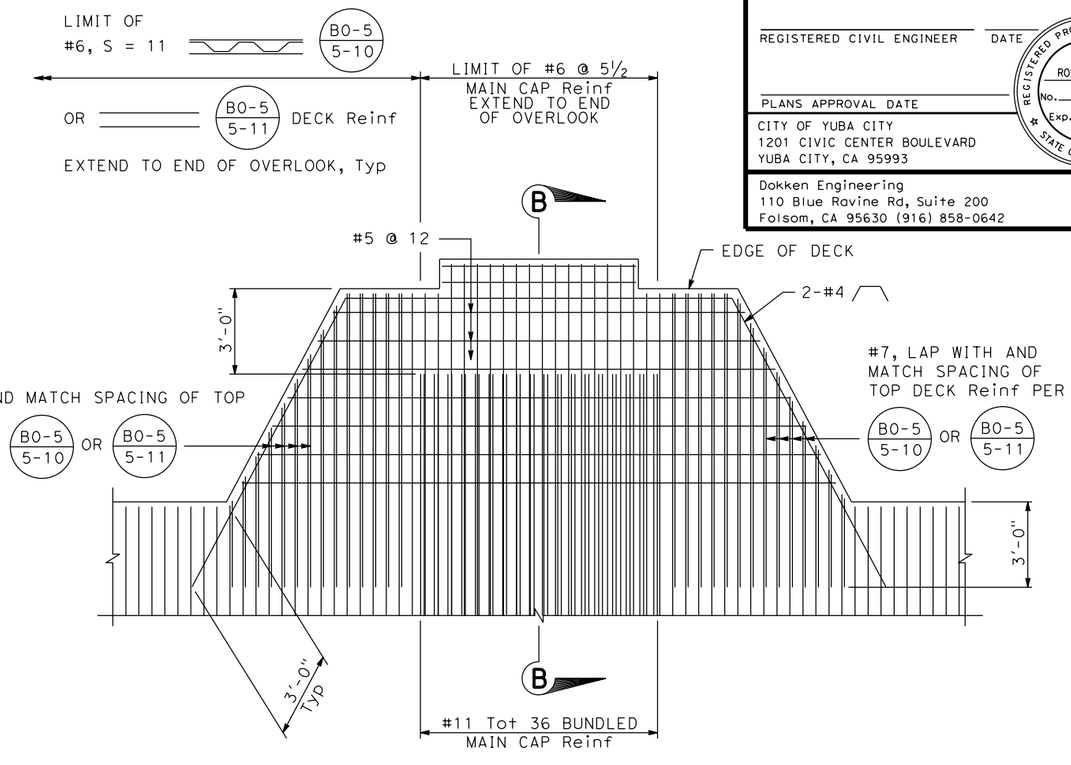

TOP REINFORCEMENT PLAN
3/8" = 1'-0"

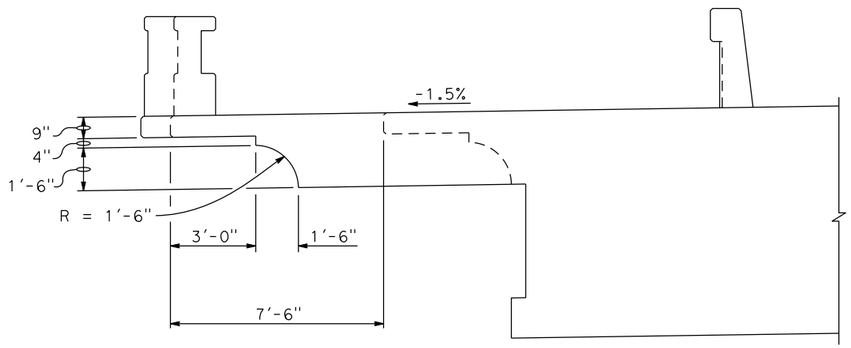

SECTION A-A
3/8" = 1'-0"

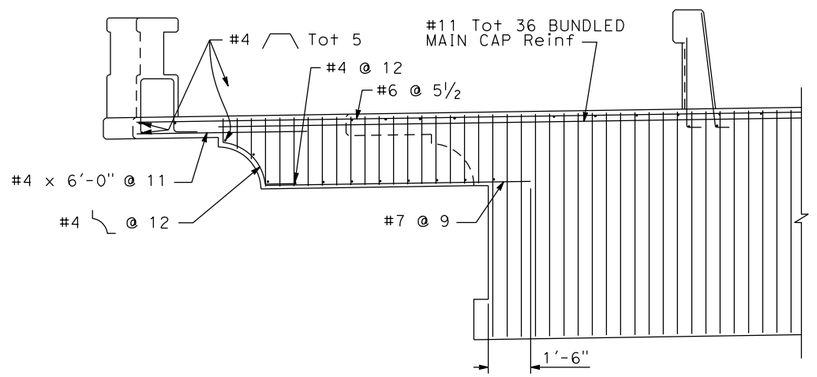

SECTION B-B
3/8" = 1'-0"

DIST	COUNTY	ROUTE	POST MILES TOTAL PROJECT	SHEET No	TOTAL SHEETS
03	Sut/Yub	Local			

REGISTERED CIVIL ENGINEER — DATE

REGISTERED PROFESSIONAL ENGINEER — ROSA GRIGGS — No. 54169 — Exp. 12-31-17 — CIVIL — STATE OF CALIFORNIA

PLANS APPROVAL DATE

CITY OF YUBA CITY
1201 CIVIC CENTER BOULEVARD
YUBA CITY, CA 95993

Dokken Engineering
110 Blue Ravine Rd, Suite 200
Folsom, CA 95630 (916) 858-0642

DESIGN OVERSIGHT

SIGN OFF DATE

	BY	CHECKED
DESIGN	R. Griggs	T. Osterkamp
DETAILS	K. Dang	
QUANTITIES		

PREPARED FOR THE STATE OF CALIFORNIA DEPARTMENT OF TRANSPORTATION

T. Osterkamp
PROJECT ENGINEER

BRIDGE NO. 18C-0012
POST MILES

5TH STREET BRIDGE OVER FEATHER RIVER
OVERLOOK DETAILS

DESIGN DETAIL SHEET (ENGLISH) (REV.7/16/10)

ORIGINAL SCALE IN INCHES FOR REDUCED PLANS 0 1 2 3

UNIT:
PROJECT NUMBER & PHASE:
CONTRACT NO.:

DISREGARD PRINTS BEARING EARLIER REVISION DATES →

REVISION DATES					SHEET	OF
-					52	61

FILE => J:\1858_5th_St_BR\517\5th BRIDGE\1858OLOOK01.dgn

USERNAME => untitled DATE PLOTTED => 8/12/2016 TIME PLOTTED => 10:50:18 AM

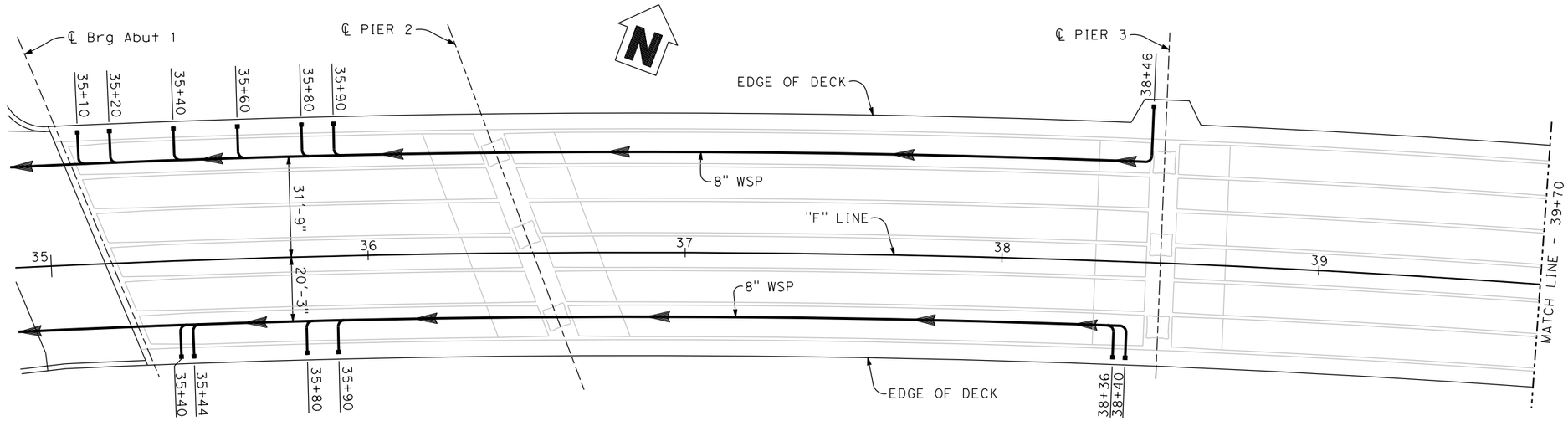

PLAN
1" = 20'
B7-6 B7-8

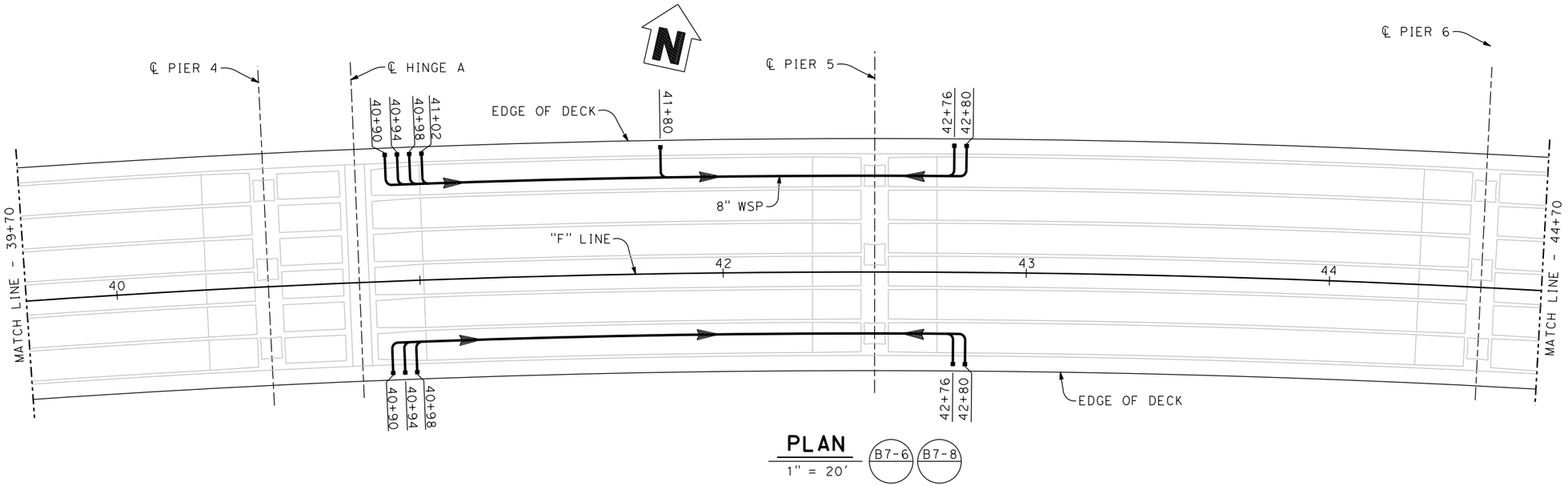

PLAN
1" = 20'
B7-6 B7-8

DIST	COUNTY	ROUTE	POST MILES TOTAL PROJECT	SHEET No	TOTAL SHEETS
03	Sut/Yub	Local			

REGISTERED CIVIL ENGINEER DATE

PLANS APPROVAL DATE

REGISTERED PROFESSIONAL ENGINEER
ROSA GRIGGS
No. 54169
Exp. 12-31-17
CIVIL
STATE OF CALIFORNIA

CITY OF YUBA CITY
1201 CIVIC CENTER BOULEVARD
YUBA CITY, CA 95993

Dokken Engineering
110 Blue Ravine Rd, Suite 200
Folsom, CA 95630 (916) 858-0642

LEGEND

▪ Denotes Type D-1 deck drain

⟵ Denotes direction of flow (2% min slope)

NOTE:
All pipes are 6" WSP unless otherwise noted.

DESIGN OVERSIGHT

SIGN OFF DATE

DESIGN DETAIL SHEET (ENGLISH) (REV.7/16/10)

	BY	CHECKED
DESIGN	R. Griggs	T. Osterkamp
DETAILS	K. Dang	CHECKED
QUANTITIES	BY	CHECKED

ORIGINAL SCALE IN INCHES FOR REDUCED PLANS 0 1 2 3

PREPARED FOR THE STATE OF CALIFORNIA DEPARTMENT OF TRANSPORTATION

T. Osterkamp
PROJECT ENGINEER

BRIDGE NO. 18C-0012
POST MILES

5TH STREET BRIDGE OVER FEATHER RIVER
DECK DRAIN LAYOUT NO. 1

UNIT:
PROJECT NUMBER & PHASE: CONTRACT NO.:

DISREGARD PRINTS BEARING EARLIER REVISION DATES →

REVISION DATES					SHEET	OF
-					53	61

FILE => J:\1858_5th_St_BR\517\5th BRIDGE\1858DD01.dgn

USERNAME => untitled DATE PLOTTED => 8/12/2016 TIME PLOTTED => 10:50:22 AM

DIST	COUNTY	ROUTE	POST MILES TOTAL PROJECT	SHEET No	TOTAL SHEETS
03	Sut/Yub	Local			

REGISTERED CIVIL ENGINEER DATE

PLANS APPROVAL DATE

REGISTERED PROFESSIONAL ENGINEER
ROSA GRIGGS
No. 54169
Exp. 12-31-17
CIVIL
STATE OF CALIFORNIA

CITY OF YUBA CITY
1201 CIVIC CENTER BOULEVARD
YUBA CITY, CA 95993

Dokken Engineering
110 Blue Ravine Rd, Suite 200
Folsom, CA 95630 (916) 858-0642

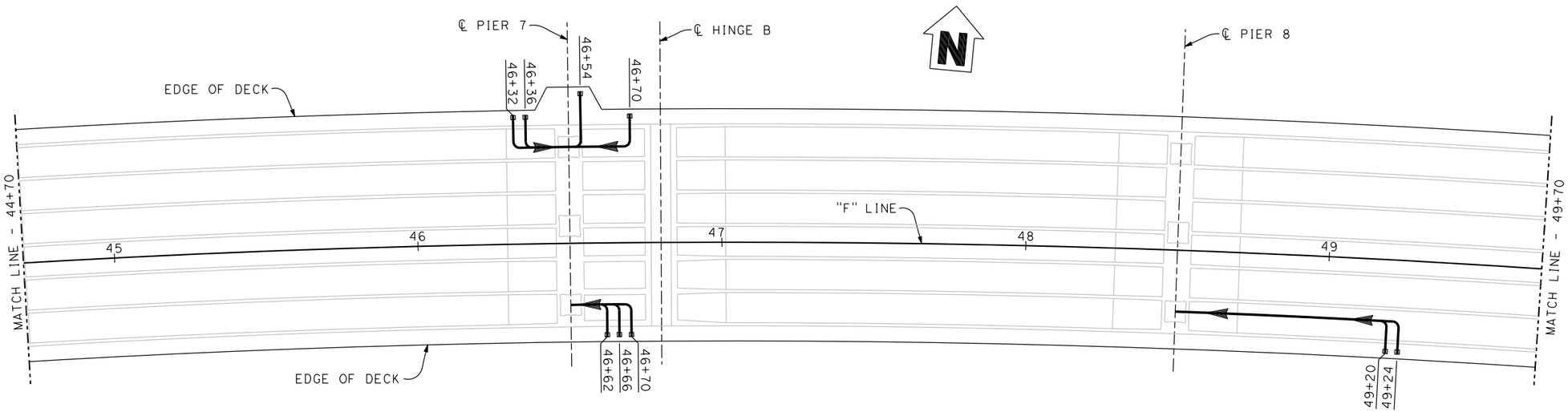

PLAN
1" = 20′ B7-6 B7-8

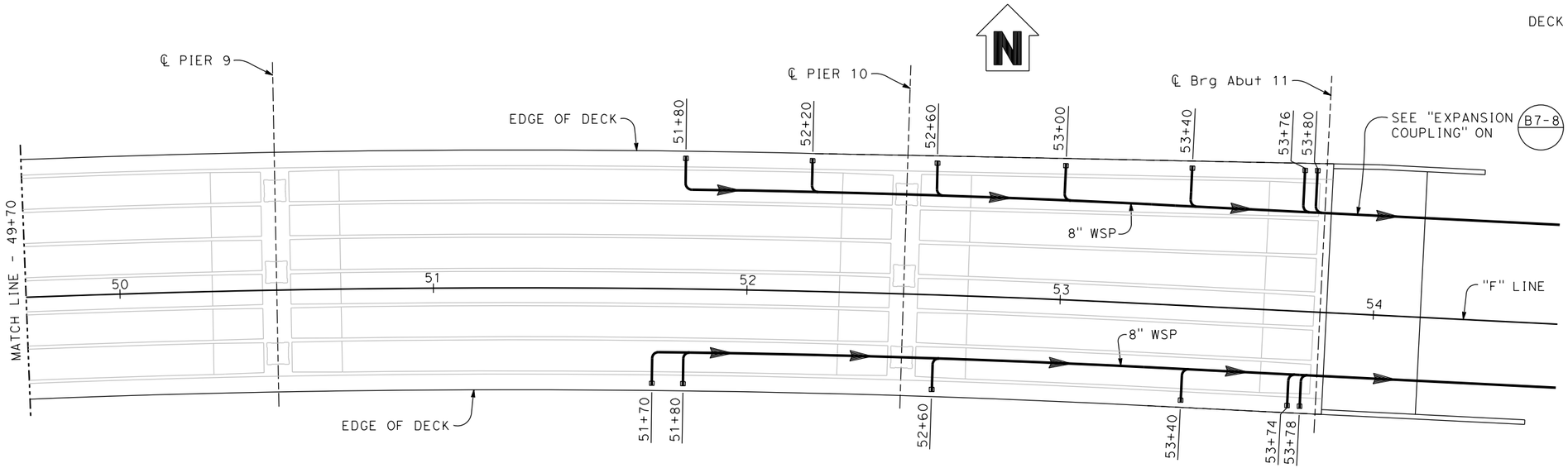

PLAN
1" = 20′ B7-6 B7-8

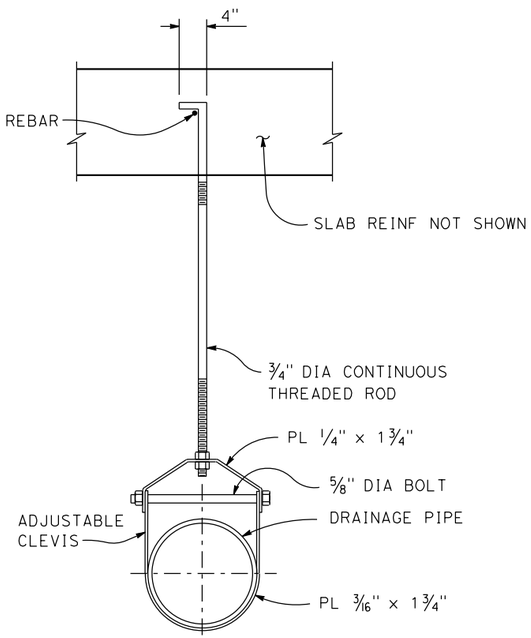

DRAINAGE PIPE SUPPORT
NO SCALE

NOTE:
Pipe hangers to be provided at 10′ max spacing,typ.

LEGEND

▪ Denotes Type D-1 deck drain

Denotes direction of flow (2% min slope)

NOTE:
All pipes are 6" WSP unless otherwise noted.

DESIGN OVERSIGHT

SIGN OFF DATE

	BY	CHECKED
DESIGN	R. Griggs	T. Osterkamp
DETAILS	K. Dang	
QUANTITIES		

PREPARED FOR THE STATE OF CALIFORNIA DEPARTMENT OF TRANSPORTATION

T. Osterkamp
PROJECT ENGINEER

BRIDGE NO. 18C-0012
POST MILES

5TH STREET BRIDGE OVER FEATHER RIVER
DECK DRAIN LAYOUT NO. 2

DESIGN DETAIL SHEET (ENGLISH) (REV.7/16/10)

ORIGINAL SCALE IN INCHES FOR REDUCED PLANS 0 1 2 3

UNIT:
PROJECT NUMBER & PHASE:
CONTRACT NO.:

DISREGARD PRINTS BEARING EARLIER REVISION DATES →

REVISION DATES				SHEET	OF
-				54	61

FILE => J:\1858_5th_St_BR\517\5th BRIDGE\1858DD02.dgn

USERNAME => untitled DATE PLOTTED => 8/12/2016 TIME PLOTTED => 10:50:23 AM

DIST	COUNTY	ROUTE	POST MILES TOTAL PROJECT	SHEET No	TOTAL SHEETS
03	Sut/Yub	Local			

REGISTERED CIVIL ENGINEER DATE

PLANS APPROVAL DATE

REGISTERED PROFESSIONAL ENGINEER — ROSA GRIGGS — No. 54169 — Exp. 12-31-17 — CIVIL — STATE OF CALIFORNIA

CITY OF YUBA CITY
1201 CIVIC CENTER BOULEVARD
YUBA CITY, CA 95993

Dokken Engineering
110 Blue Ravine Rd, Suite 200
Folsom, CA 95630 (916) 858-0642

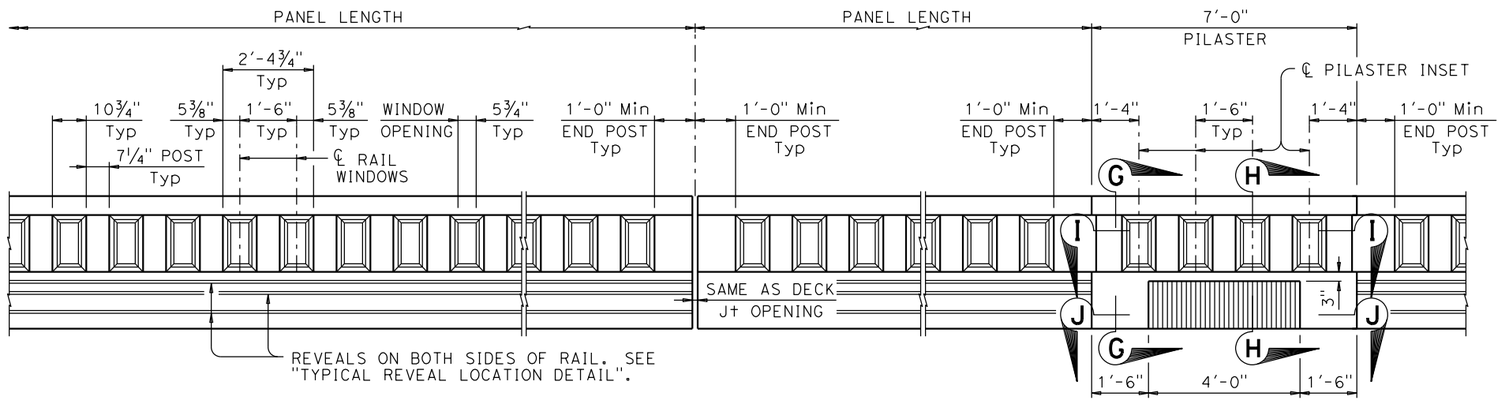

AT ABUTMENTS AND HINGES

AT PIERS

PART ELEVATION

½" = 1'-0"

NOTES:

1. FOR SECTIONS G-G, H-H, I-I, AND J-J, SEE "CONCRETE BARRIER TYPE C412 NO. 2" SHEET

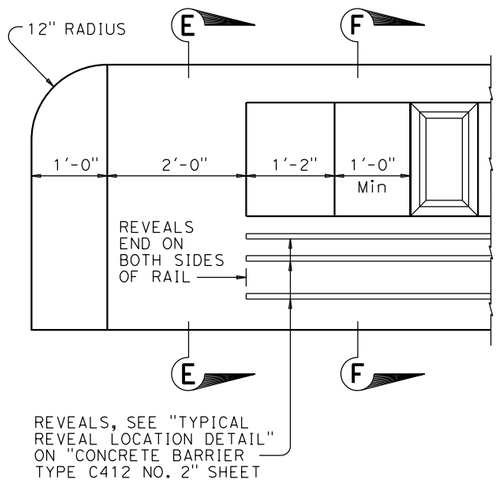

ELEVATION AT END SECTION

1" = 1'-0"

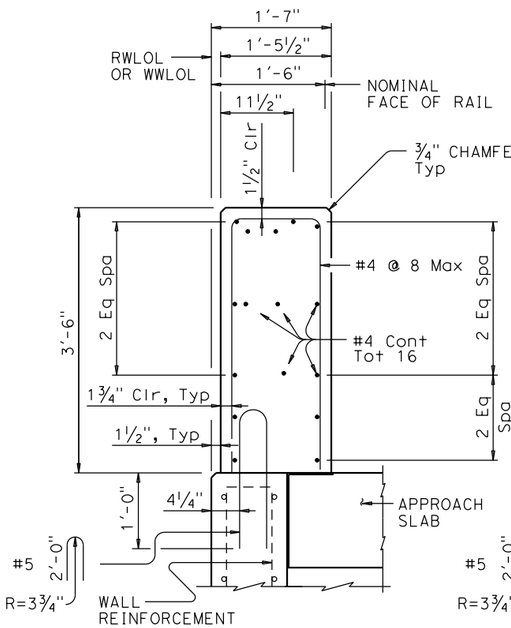

SECTION E-E ON WINGWALLS OR RETAINING WALLS

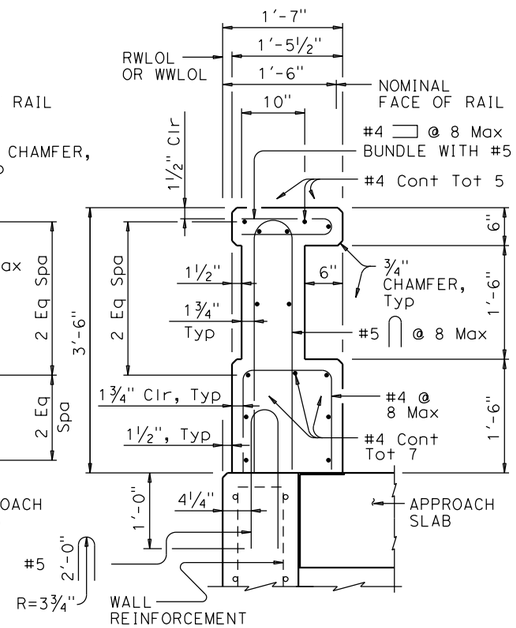

SECTION F-F ON WINGWALLS OR RETAINING WALLS

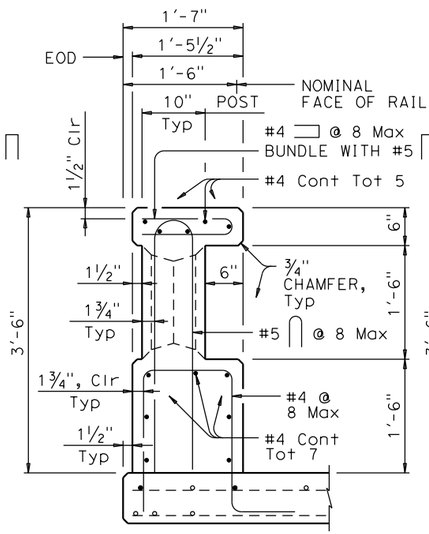

ON BRIDGE DECK AT POST

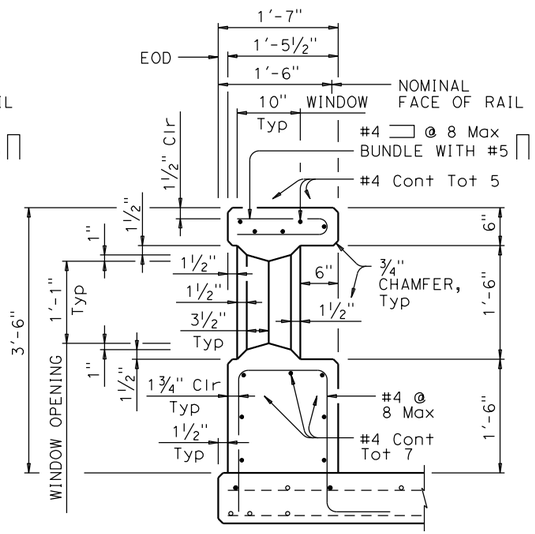

ON BRIDGE DECK AT WINDOW

SECTIONS THRU RAIL

1" = 1'-0"

(REVEALS NOT SHOWN FOR CLARITY. SEE "TYPICAL REVEAL LOCATION DETAIL" ON "CONCRETE BARRIER TYPE C412 NO. 2" SHEET)

DESIGN OVERSIGHT

SIGN OFF DATE

	BY	CHECKED
DESIGN	R. Griggs	T. Osterkamp
DETAILS	K. Dang	
QUANTITIES		

PREPARED FOR THE STATE OF CALIFORNIA DEPARTMENT OF TRANSPORTATION

T. Osterkamp
PROJECT ENGINEER

BRIDGE NO. 18C-0012
POST MILES

5TH STREET BRIDGE OVER FEATHER RIVER
CONCRETE BARRIER TYPE C412 NO. 1

DESIGN DETAIL SHEET (ENGLISH) (REV.7/16/10)

ORIGINAL SCALE IN INCHES FOR REDUCED PLANS 0 1 2 3

UNIT:
PROJECT NUMBER & PHASE:
CONTRACT NO.:

DISREGARD PRINTS BEARING EARLIER REVISION DATES →

REVISION DATES				SHEET	OF
-				55	61

FILE => J:\1858_5th_St_BR\517\5th BRIDGE\1858TXRAIL01.dgn

USERNAME => unfitted DATE PLOTTED => 8/12/2016 TIME PLOTTED => 10:50:24 AM

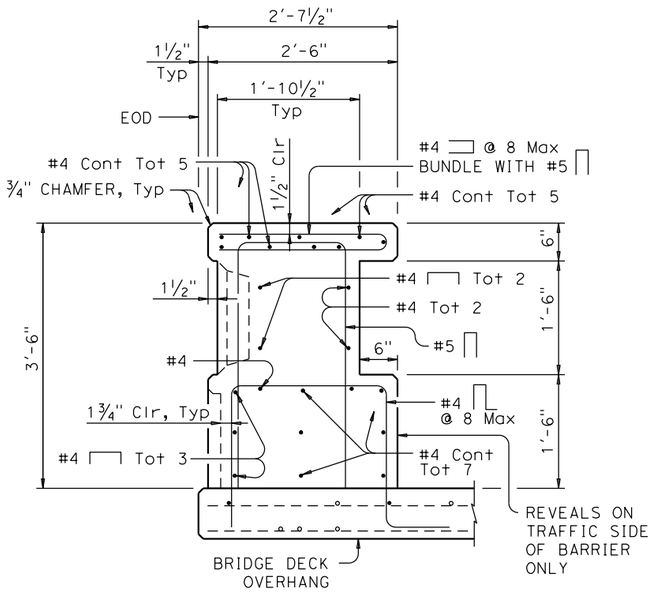

SECTION G-G

1" = 1'-0"

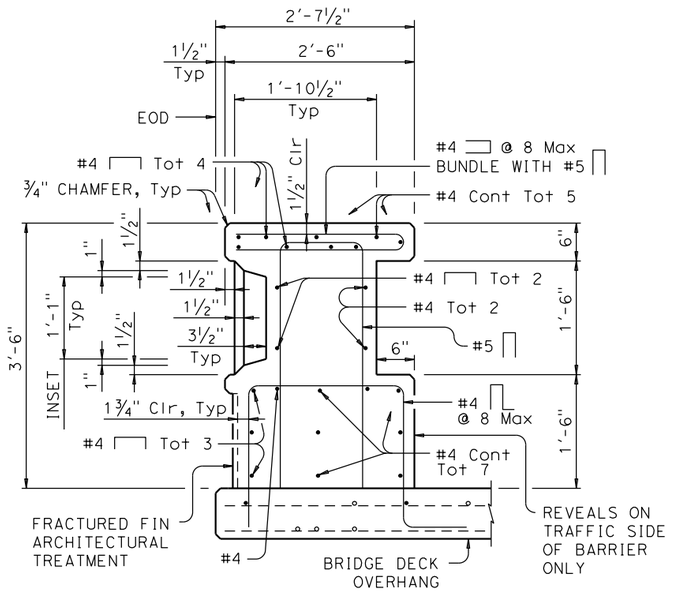

SECTION H-H

1" = 1'-0"

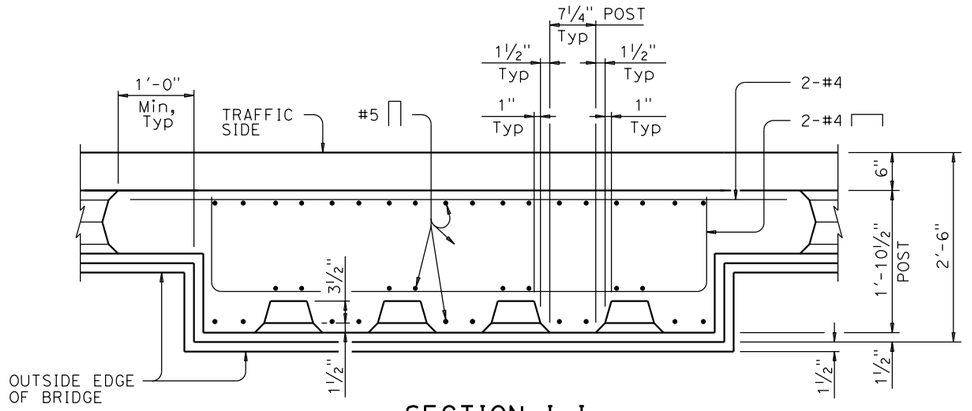

SECTION I-I

1" = 1'-0"

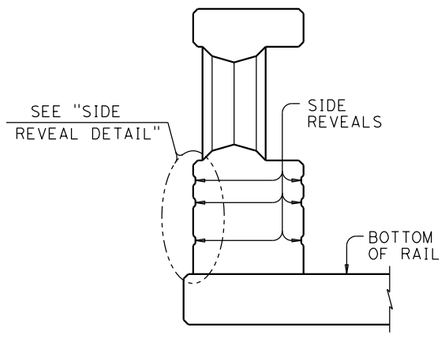

TYPICAL REVEAL LOCATION DETAIL

1" = 1'-0"

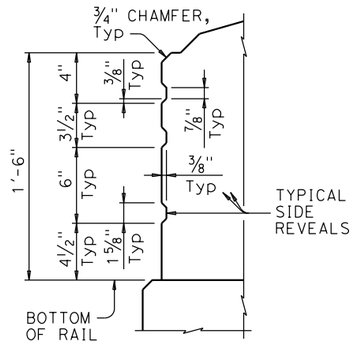

SIDE REVEAL DETAIL

2" = 1'-0"

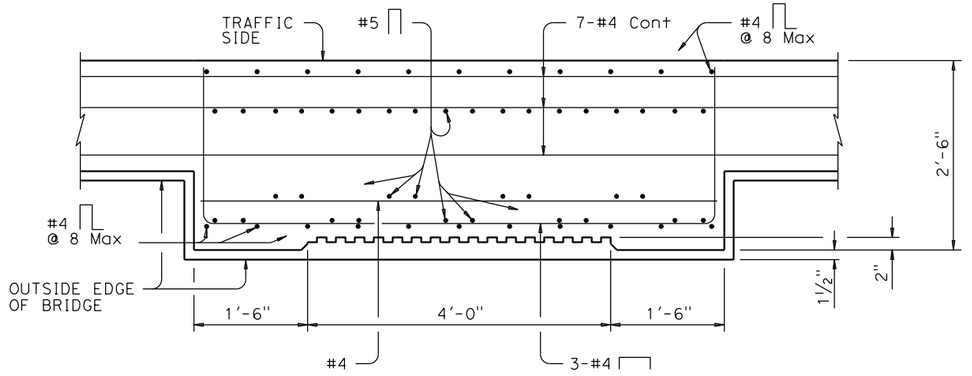

SECTION J-J

1" = 1'-0"

DIST	COUNTY	ROUTE	POST MILES TOTAL PROJECT	SHEET No	TOTAL SHEETS
03	Sut/Yub	Local			

REGISTERED CIVIL ENGINEER DATE

PLANS APPROVAL DATE

REGISTERED PROFESSIONAL ENGINEER — ROSA GRIGGS — No. 54169 — Exp. 12-31-17 — CIVIL — STATE OF CALIFORNIA

CITY OF YUBA CITY
1201 CIVIC CENTER BOULEVARD
YUBA CITY, CA 95993

Dokken Engineering
110 Blue Ravine Rd, Suite 200
Folsom, CA 95630 (916) 858-0642

DESIGN OVERSIGHT			
SIGN OFF DATE			
DESIGN	BY R. Griggs	CHECKED T. Osterkamp	
DETAILS	BY K. Dang	CHECKED	
QUANTITIES	BY	CHECKED	

PREPARED FOR THE STATE OF CALIFORNIA DEPARTMENT OF TRANSPORTATION

T. Osterkamp
PROJECT ENGINEER

BRIDGE NO. 18C-0012
POST MILES

5TH STREET BRIDGE OVER FEATHER RIVER
CONCRETE BARRIER TYPE C412 NO. 2

DESIGN DETAIL SHEET (ENGLISH) (REV.7/16/10)

ORIGINAL SCALE IN INCHES FOR REDUCED PLANS 0 1 2 3

UNIT:
PROJECT NUMBER & PHASE: CONTRACT NO.:

DISREGARD PRINTS BEARING EARLIER REVISION DATES →

REVISION DATES | SHEET 56 | OF 61

FILE => J:\1858_5th_St_BR\517\5th BRIDGE\1858TXRAIL02.dgn

USERNAME => untitled DATE PLOTTED => 8/12/2016 TIME PLOTTED => 10:50:24 AM

DIST	COUNTY	ROUTE	POST MILES TOTAL PROJECT	SHEET No	TOTAL SHEETS
03	Sut/Yub	Local			

REGISTERED CIVIL ENGINEER — DATE

PLANS APPROVAL DATE

REGISTERED PROFESSIONAL ENGINEER — ROSA GRIGGS — No. 54169 — Exp. 12-31-17 — CIVIL — STATE OF CALIFORNIA

CITY OF YUBA CITY
1201 CIVIC CENTER BOULEVARD
YUBA CITY, CA 95993

Dokken Engineering
110 Blue Ravine Rd, Suite 200
Folsom, CA 95630 (916) 858-0642

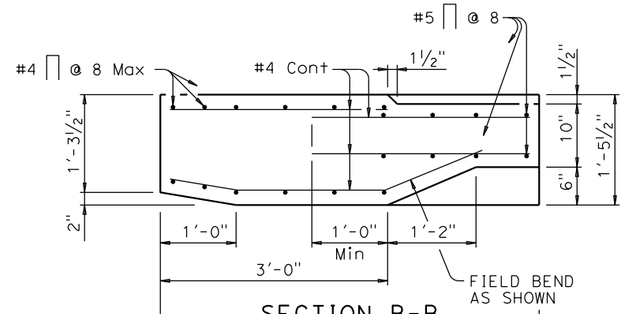

SECTION B-B

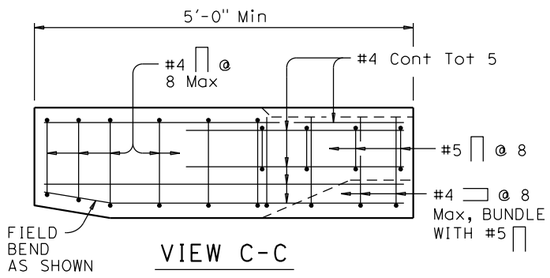

VIEW C-C

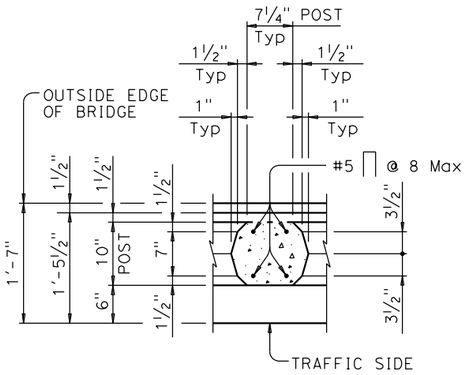

SECTION D-D

SECTION A-A

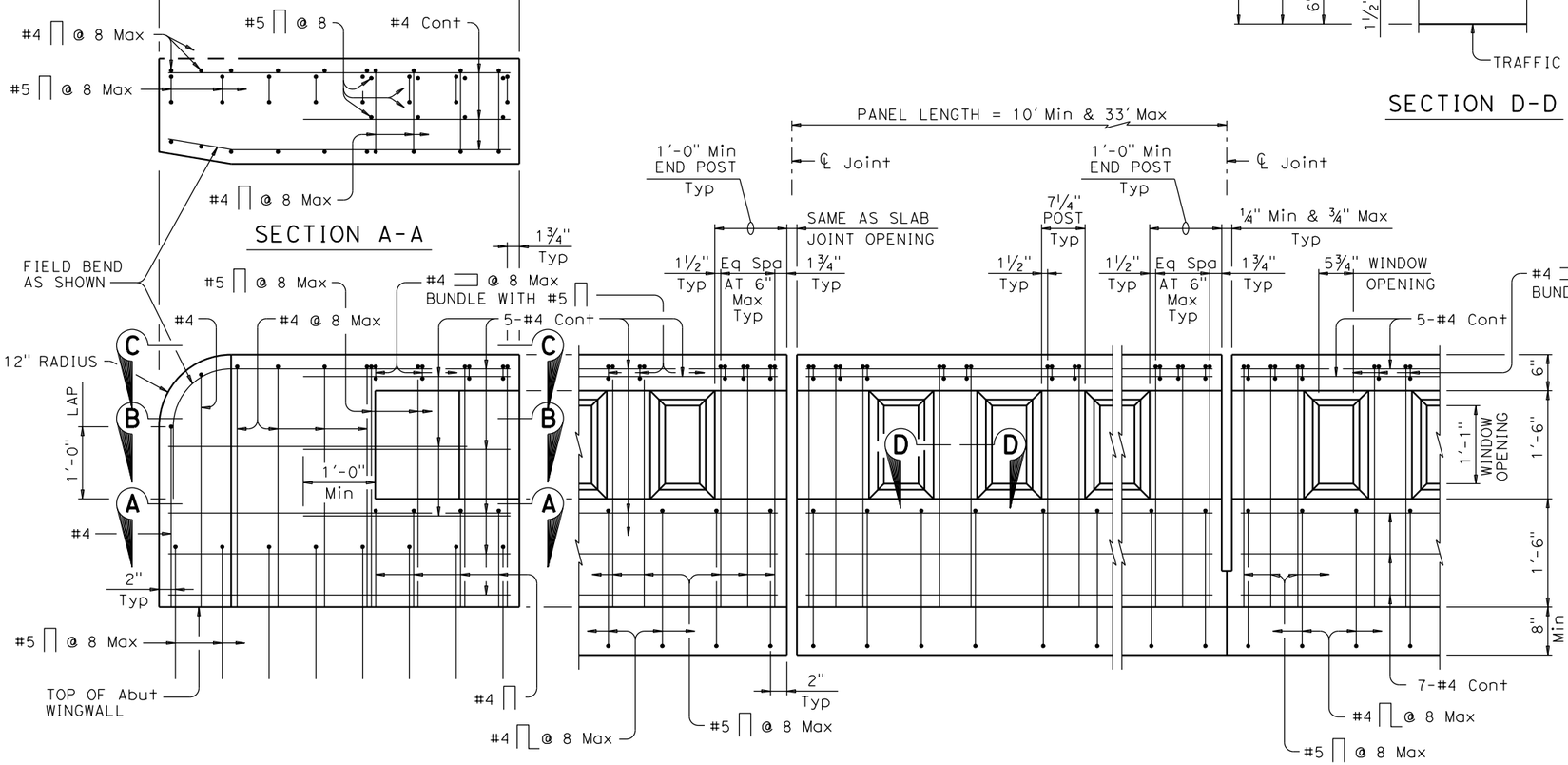

AT END SECTION

AT ABUTMENTS AND HINGES

AT PIERS

ELEVATION SHOWING TYPICAL REINFORCING PLACEMENT

1" = 1'-0"

DESIGN OVERSIGHT		DESIGN	BY R. Griggs	CHECKED T. Osterkamp	PREPARED FOR THE STATE OF CALIFORNIA DEPARTMENT OF TRANSPORTATION	T. Osterkamp PROJECT ENGINEER	BRIDGE NO. 18C-0012
SIGN OFF DATE		DETAILS	BY K. Dang	CHECKED			POST MILES
DESIGN DETAIL SHEET (ENGLISH) (REV.7/16/10)		QUANTITIES	BY	CHECKED		UNIT: PROJECT NUMBER & PHASE: CONTRACT NO.:	DISREGARD PRINTS BEARING EARLIER REVISION DATES →

5TH STREET BRIDGE OVER FEATHER RIVER
CONCRETE BARRIER TYPE C412 NO. 3

ORIGINAL SCALE IN INCHES FOR REDUCED PLANS 0 1 2 3

REVISION DATES: - | | | |

SHEET 57 OF 61

FILE => J:\1858_5th_St_BR\517\5th BRIDGE\1858TXRAIL03.dgn

USERNAME => untitled DATE PLOTTED => 8/12/2016 TIME PLOTTED => 10:50:25 AM

DIST	COUNTY	ROUTE	POST MILES TOTAL PROJECT	SHEET No	TOTAL SHEETS
03	Sut/Yub	Local			

REGISTERED CIVIL ENGINEER DATE

PLANS APPROVAL DATE

REGISTERED PROFESSIONAL ENGINEER — ROSA GRIGGS — No. 54169 — Exp. 12-31-17 — CIVIL — STATE OF CALIFORNIA

CITY OF YUBA CITY
1201 CIVIC CENTER BOULEVARD
YUBA CITY, CA 95993

Dokken Engineering
110 Blue Ravine Rd, Suite 200
Folsom, CA 95630 (916) 858-0642

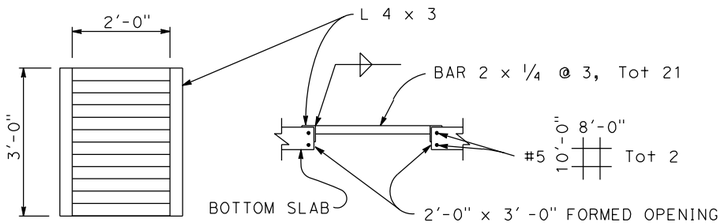

PLAN SECTION

SOFFIT ACCESS GRATE

NO SCALE

FOR LOCATIONS OF SOFFIT ACCESS GRATE, SEE "GIRDER LAYOUT" SHEETS.

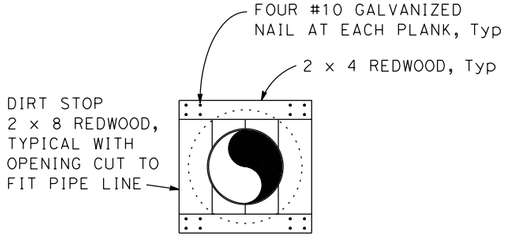

DETAIL C
DIRT STOP DETAIL

NO SCALE

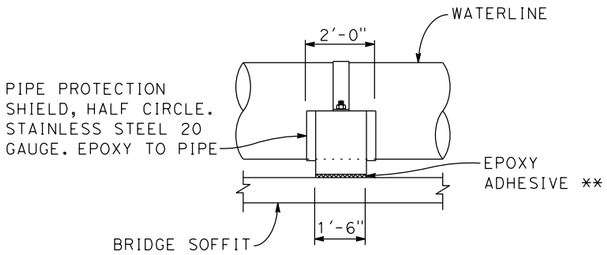

FRONT VIEW

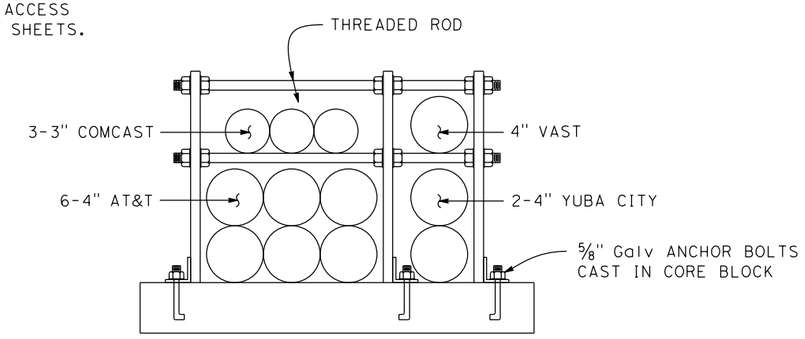

UTILITY CRADLE DETAIL

NO SCALE

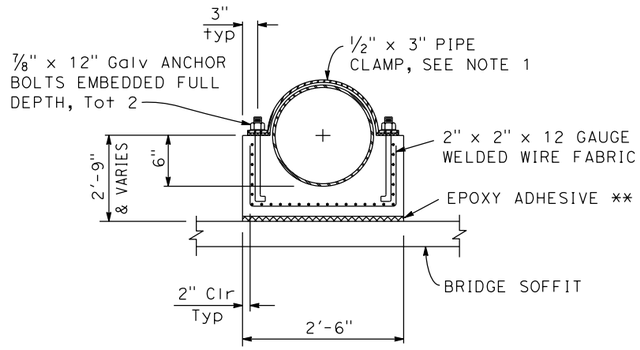

SECTION VIEW

PRECAST CONCRETE CRADLE

NO SCALE

** Secure concrete support to bridge soffit with a two component epoxy adhesive, sikadur 31 hi mod. gel or an approved equal. The contact surface of the soffit shall be level and clean prior to application of the adhesive. Follow strictly the manufacturer's installation instructions.

NOTE:

1. 1/4" gap shall be provided between the pipe and the clamp.

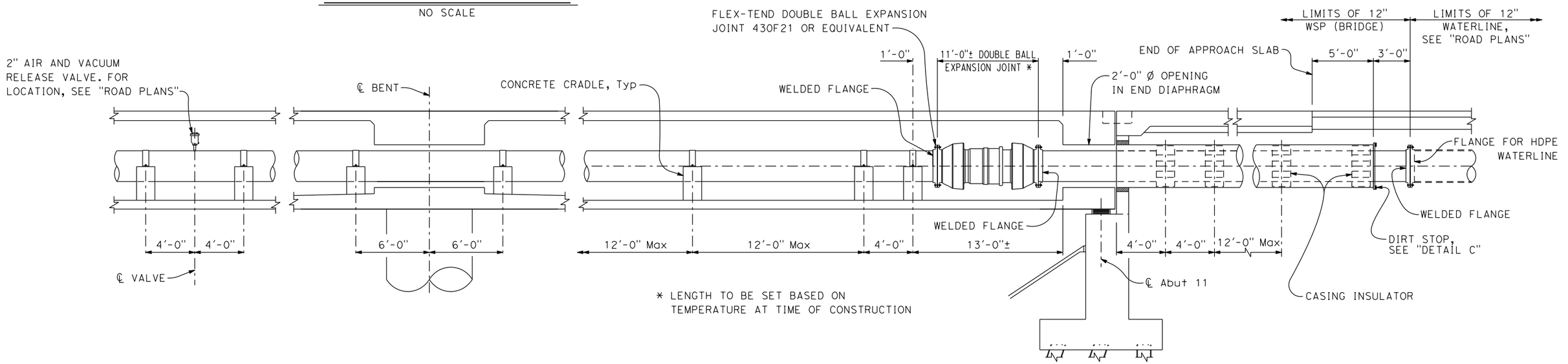

WATERLINE ELEVATION

NO SCALE

DESIGN OVERSIGHT		DESIGN	BY R. Griggs	CHECKED T. Osterkamp	PREPARED FOR THE STATE OF CALIFORNIA DEPARTMENT OF TRANSPORTATION	T. Osterkamp PROJECT ENGINEER	BRIDGE NO. 18C-0012 POST MILES	5TH STREET BRIDGE OVER FEATHER RIVER UTILITY DETAILS
SIGN OFF DATE		DETAILS	BY K. Dang	CHECKED				
		QUANTITIES	BY	CHECKED				

DESIGN DETAIL SHEET (ENGLISH) (REV.7/16/10)

ORIGINAL SCALE IN INCHES FOR REDUCED PLANS 0 1 2 3

UNIT:
PROJECT NUMBER & PHASE: CONTRACT NO.:

DISREGARD PRINTS BEARING EARLIER REVISION DATES →

REVISION DATES				SHEET	OF
-				58	61

FILE => J:\1858_5th_St_BR\517\5th BRIDGE\1858U01.dgn

USERNAME => untitled DATE PLOTTED => 8/12/2016 TIME PLOTTED => 10:50:19 AM

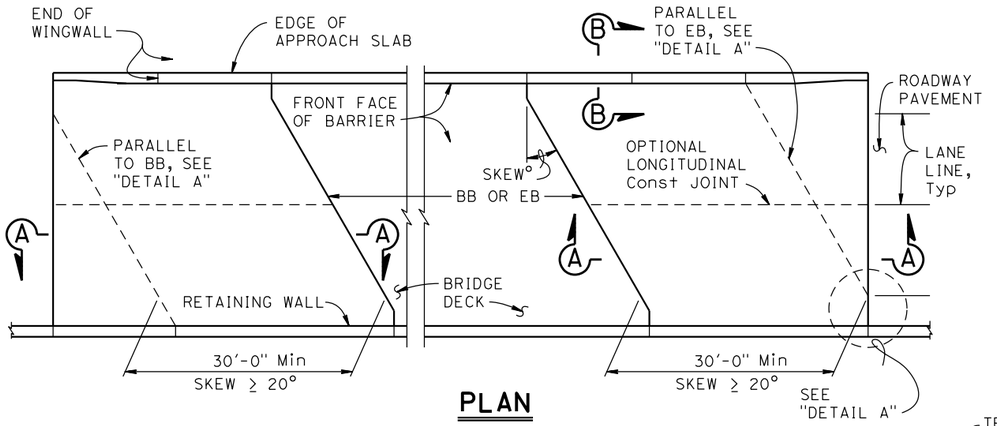

PLAN

1" = 10'

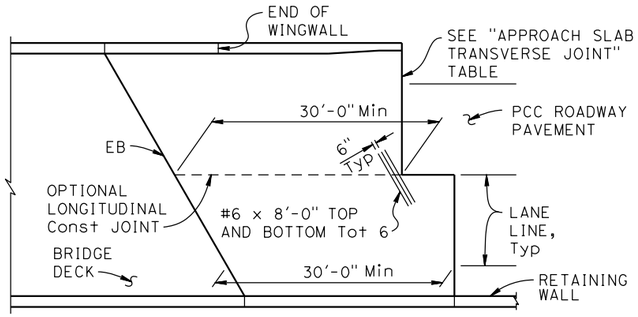

END STAGGER DETAIL

1" = 10'

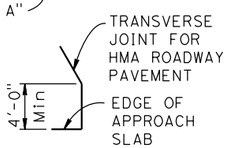

DETAIL A

No Scale

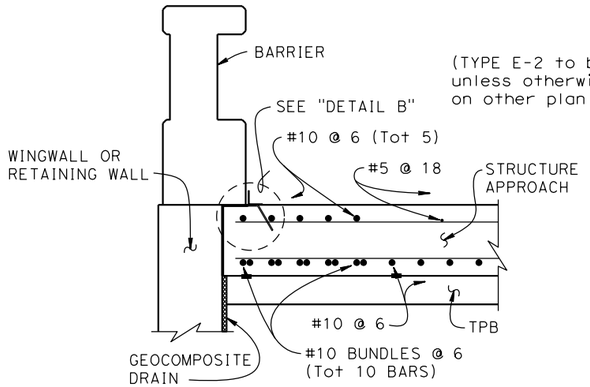

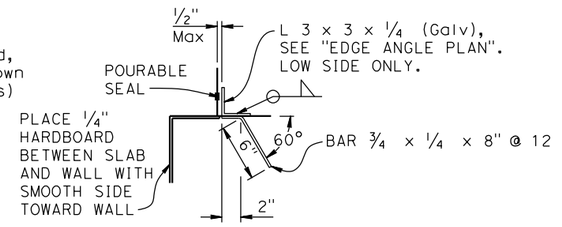

DETAIL B

1½" = 1'-0"

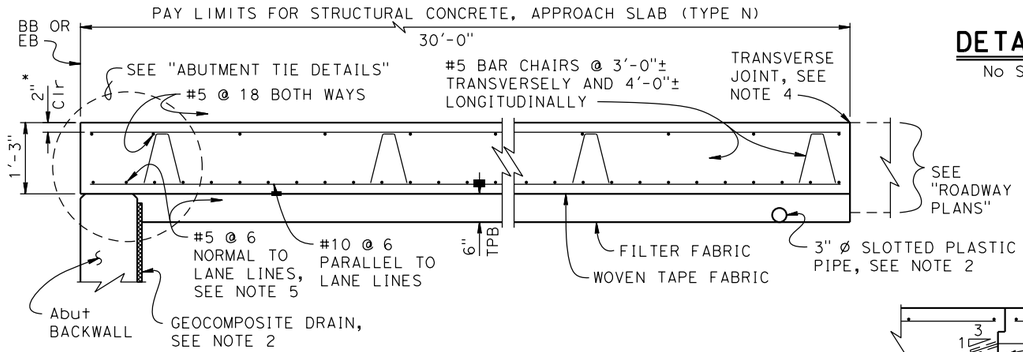

SECTION A-A

¾" = 1'-0"

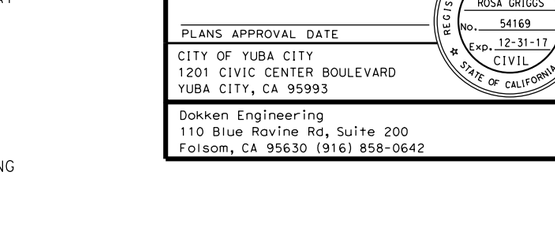

SECTION B-B

¾" = 1'-0"

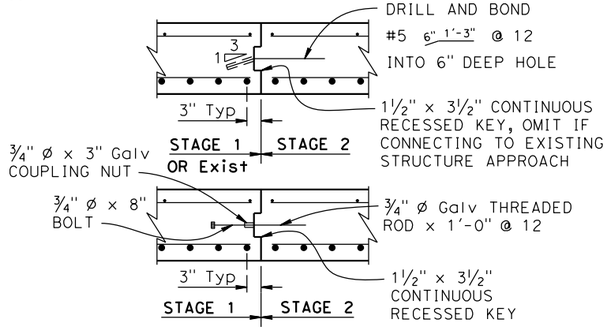

LONGITUDINAL CONSTRUCTION JOINT ALTERNATIVES

¾" = 1'-0"

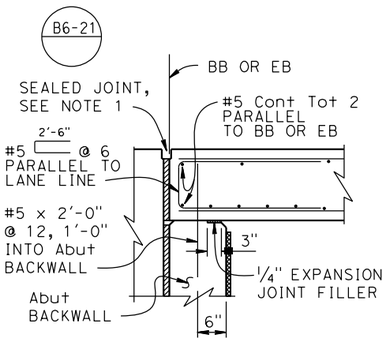

ABUTMENT TIE DETAILS

¾" = 1'-0"

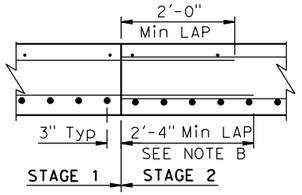

NOTE B:

Min lap splice for bottom Reinf must be 2'-9" in Freeze-Thaw Area.

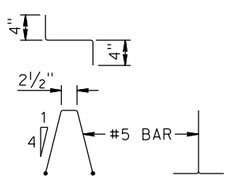

BAR CHAIR DETAIL

1" = 1'-0"

EDGE ANGLE PLAN

1" = 1'-0"

DESIGN NOTES

DESIGN: AASHTO LRFD Bridge Design Specifications, 2012 Edition with Caltrans Amendments, preface dated January 2014

LIMIT STATES: Service I, Strength I & II, Extreme II and Fatigue I (γ_{FAT} = 1.0)

DEAD LOAD: Includes 35 psf for future wearing surface

LIVE LOAD: HL93 and permit design load
Equivalent strip width method: W_1 = 12 ft
Slab span: L_1 = 24.5 ft

REINFORCED CONCRETE:
f_y = 60 ksi
f'_c = 3.6 ksi
n = 8

NOTES:

1. For joint protection details, blockout dimensions for joint seal assembly, and other details not shown, see other plan sheets. For MR ≤ 2", adjust reinforcement to clear sawcut for sealed joint. For MR > 2", haunch reinforcement placed for joint seal assembly blockout must be normal to BB or EB and spaced to avoid joint seal assembly anchorage.
2. For drainage details, see "STRUCTURE APPROACH DRAINAGE DETAILS" sheet.
3. End the plate or edge angle at beginning of barrier transition, end of wingwall, or end of structure approach as applicable.
4. Transverse Joint must be a minimum of 5'-0" from an existing or constructed weakened plane joint in approach PCC roadway pavement. Refer to Standard Plans P10 and P14.
5. At the Contractor's option, approach slab transverse reinforcement may be placed parallel to BB or EB. Spacing of transverse reinforcement is measured along ℄ roadway.

DIST	COUNTY	ROUTE	POST MILES TOTAL PROJECT	SHEET No	TOTAL SHEETS
03	Sut/Yub	Local			

REGISTERED CIVIL ENGINEER — DATE

REGISTERED PROFESSIONAL ENGINEER — ROSA GRIGGS — No. 54169 — Exp. 12-31-17 — CIVIL — STATE OF CALIFORNIA

PLANS APPROVAL DATE

CITY OF YUBA CITY
1201 CIVIC CENTER BOULEVARD
YUBA CITY, CA 95993

Dokken Engineering
110 Blue Ravine Rd, Suite 200
Folsom, CA 95630 (916) 858-0642

DESIGN OVERSIGHT			
SIGN OFF DATE			
DESIGN	BY R. Griggs	CHECKED T. Osterkamp	PREPARED FOR THE STATE OF CALIFORNIA DEPARTMENT OF TRANSPORTATION
DETAILS	BY K. Dang	CHECKED	
QUANTITIES	BY	CHECKED	

T. Osterkamp
PROJECT ENGINEER

BRIDGE NO. 18C-0012
POST MILES

5TH STREET BRIDGE OVER FEATHER RIVER
STRUCTURE APPROACH TYPE N (30S)

DESIGN DETAIL SHEET (ENGLISH) (REV.7/16/10)

ORIGINAL SCALE IN INCHES FOR REDUCED PLANS 0 1 2 3

UNIT:
PROJECT NUMBER & PHASE:
CONTRACT NO.:

DISREGARD PRINTS BEARING EARLIER REVISION DATES →

REVISION DATES				SHEET	OF
-				59	61

FILE => J:\1858_5th_St_BR\517\5th BRIDGE\1858SAS.dgn

USERNAME => unfitted DATE PLOTTED => 8/12/2016 TIME PLOTTED => 10:50:25 AM

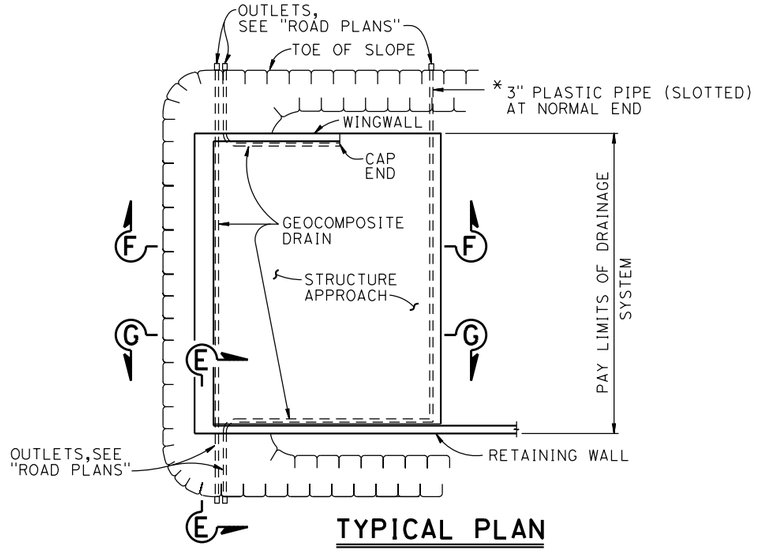

TYPICAL PLAN

1" = 10'

* FOR PIPE LAYOUT AT STAGGERED END, SEE "DETAIL B"

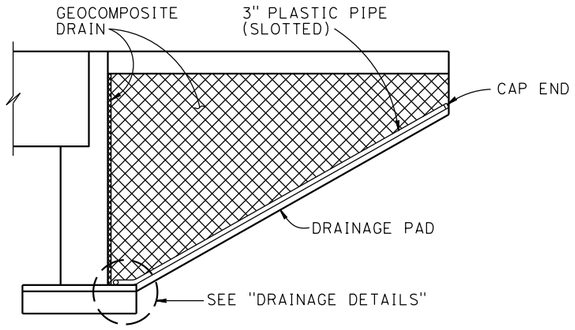

CANTILEVER WINGWALL

SECTION F-F

¼" = 1'-0"

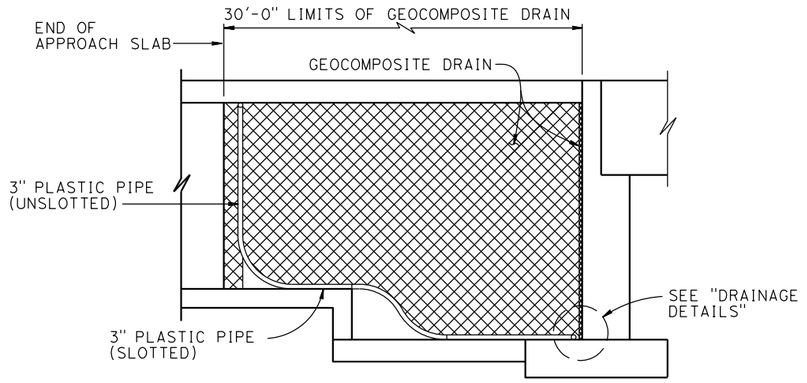

RETAINING WALL WINGWALL DRAINAGE DETAILS

SECTION G-G

¼" = 1'-0"

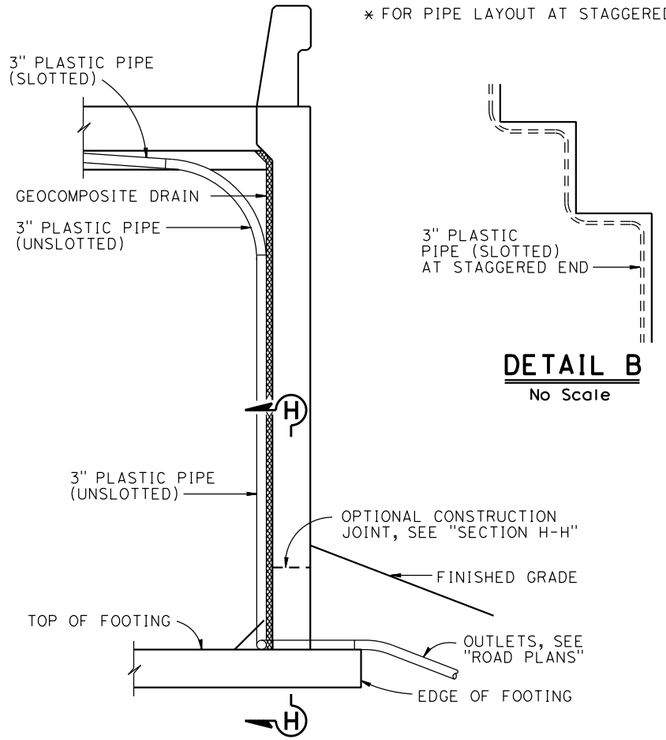

SECTION E-E

½" = 1'-0"

NOTE: Bends and junctions in 3" plastic pipe are 30" radius Min

DETAIL B

No Scale

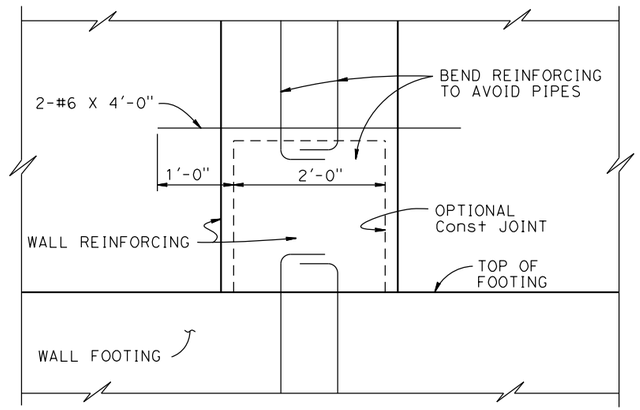

SECTION H-H

1" = 1'-0"

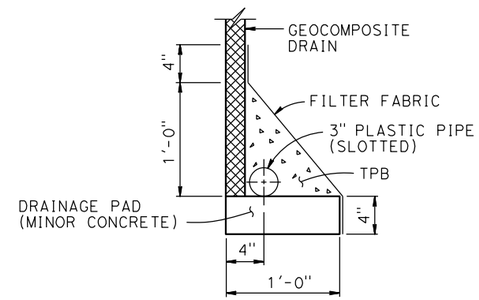

WITHOUT FOOTING

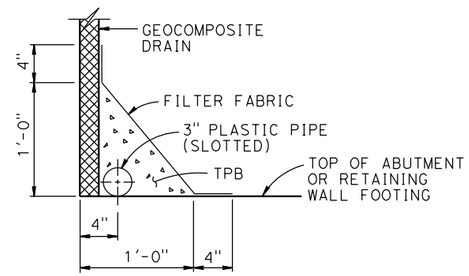

WITH FOOTING

DRAINAGE DETAILS

1½" = 1'-0"

DIST	COUNTY	ROUTE	POST MILES TOTAL PROJECT	SHEET No	TOTAL SHEETS
03	Sut/Yub	Local			

REGISTERED CIVIL ENGINEER — DATE

PLANS APPROVAL DATE

REGISTERED PROFESSIONAL ENGINEER — ROSA GRIGGS — No. 54169 — Exp. 12-31-17 — CIVIL — STATE OF CALIFORNIA

CITY OF YUBA CITY
1201 CIVIC CENTER BOULEVARD
YUBA CITY, CA 95993

Dokken Engineering
110 Blue Ravine Rd, Suite 200
Folsom, CA 95630 (916) 858-0642

DESIGN	BY R. Griggs	CHECKED T. Osterkamp	
DETAILS	BY K. Dang	CHECKED	
QUANTITIES	BY	CHECKED	

DESIGN OVERSIGHT

SIGN OFF DATE

PREPARED FOR THE STATE OF CALIFORNIA DEPARTMENT OF TRANSPORTATION

T. Osterkamp
PROJECT ENGINEER

BRIDGE NO. 18C-0012
POST MILES

5TH STREET BRIDGE OVER FEATHER RIVER
STRUCTURE APPROACH DRAINAGE DETAILS

DESIGN DETAIL SHEET (ENGLISH) (REV.7/16/10)

ORIGINAL SCALE IN INCHES FOR REDUCED PLANS 0 1 2 3

UNIT:
PROJECT NUMBER & PHASE:
CONTRACT NO.:

DISREGARD PRINTS BEARING EARLIER REVISION DATES →

REVISION DATES				SHEET	OF
-				60	61

FILE => J:\1858_5th_St_BR\517\5th BRIDGE\1858SADD.dgn

USERNAME => untitled DATE PLOTTED => 8/12/2016 TIME PLOTTED => 10:50:25 AM

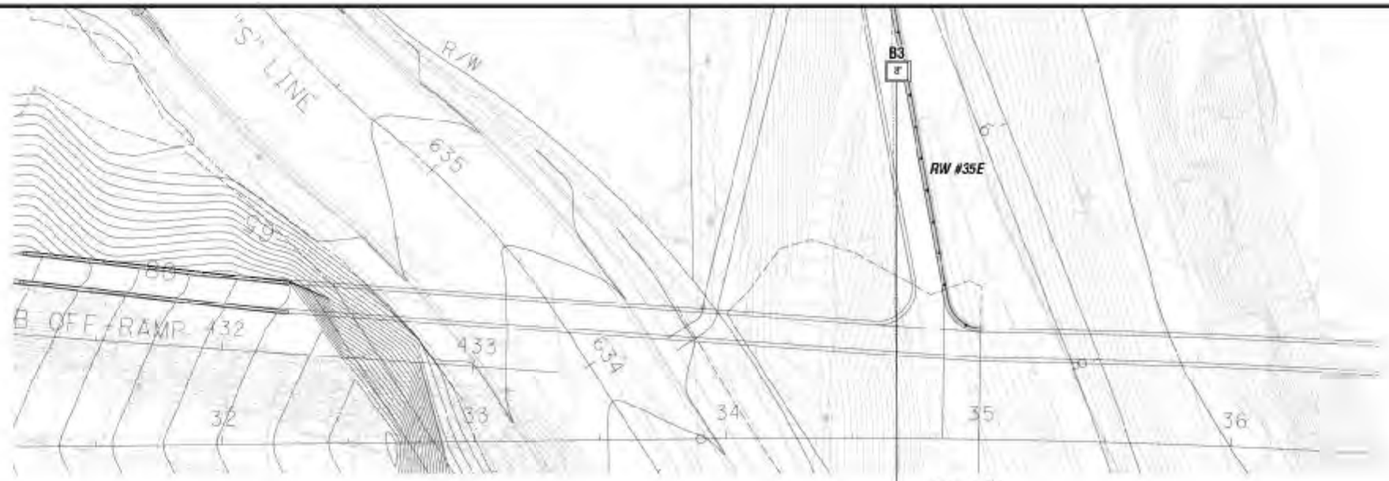

PLAN

1" = 30'

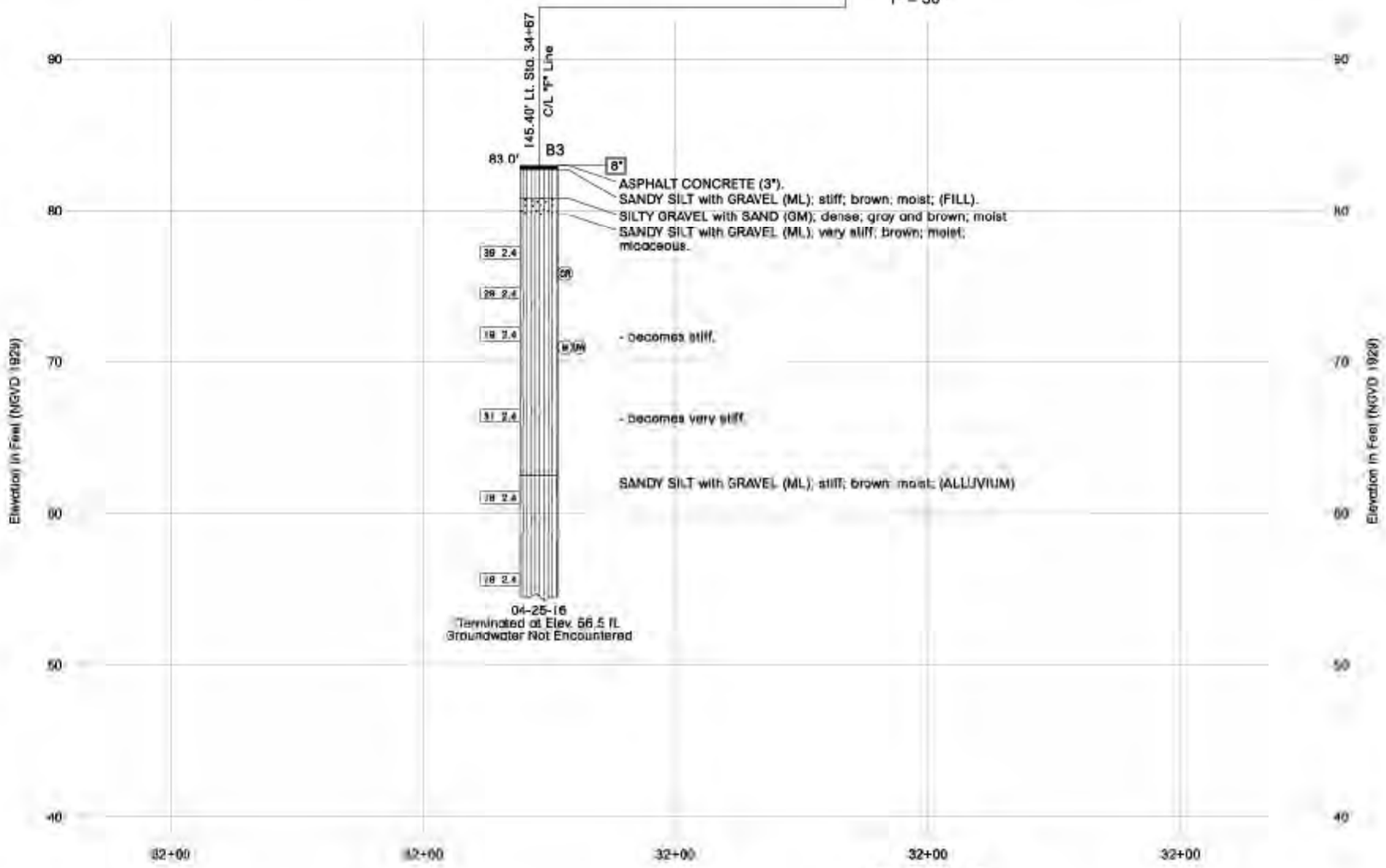

PROFILE

HORIZONTAL SCALE: 1" = 100'
VERTICAL SCALE: 1" = 5'

DIST	COUNTY	ROUTE	POST MILES TOTAL PROJECT	SHEET No.	TOTAL SHEETS
03	SUI			4	5

REGISTERED PROFESSIONAL ENGINEER

PLANS APPROVAL DATE

The State of California or its officers or agents shall not be responsible for the accuracy or completeness of electronic copies of this plan sheet.

GEOCON CONSULTANTS, INC.

Geocon Project No. S9853-05-03

This LOTB sheet was prepared in accordance with the Caltrans Soil & Rock Logging, Classification, and Presentation Manual (2010).

BENCH MARK

DESCRIPTION

Set Berntsen Spike V205 located at N2027792.376 E6896099.564, elevation 1,816.42 feet, NGVD 1929, per sheet SC-1 of undated "Survey Control" 65% plan provided by Dokken Engineering.

NOTES

1. The consistency/apparent density descriptions are from Figures 2-9 and 2-10 of the Caltrans "Soil and Rock Logging, Classification, and Presentation Manual". These descriptors are based upon the Standard Penetration Test (ASTM D 1586)(uncorrected for Hammer Energy Ratio and the Modified California sampling method (ASTM D 3550). The descriptors based on the Mod Cal method have been modified by the utilization of the Burmister's (1948) input energy correction equation and NAVFAC DM 7.1.

2. Relatively undisturbed soil samples were obtained by driving a 3-inch outside diameter, with a 2.5-inch inside diameter (California Modified) split-spoon sampler for Modified California Sampling Methods and a 2-inch outside diameter split-spoon sampler for Standard Penetration Test Sampling Methods.

3. The boring logs and related information represent the opinion of the professional engineer as to the character of the material at the locations shown. Soil and groundwater conditions between adjacent test holes and at other locations may differ from those shown. Groundwater conditions may change with passage of time.

4. Test boring elevations are approximate based on topographic base sheet mapping prepared for this project.

5. Test boring locations were determined in the field based on staking and pacing from mapped site features. The locations of the explorations should be considered accurate only to the degree implied by the measuring methods used.

6. A downhole 140-pound automatic hammer falling 30 inches was used to drive samplers.

7. Visual classification of earth materials was based on field inspection and was confirmed or revised with laboratory test results.

ENGINEERING SERVICES	GEOTECHNICAL SERVICES	PREPARED FOR THE STATE OF CALIFORNIA DEPARTMENT OF TRANSPORTATION	DIVISION OF ENGINEERING SERVICES STRUCTURE DESIGN DESIGN BRANCH	BRIDGE NO. / POST MILES	5TH STREET BRIDGE OVER FEATHER RIVER LOG OF TEST BORINGS
FUNCTIONAL SUPERVISOR / NAME	DRAWN BY: D. HANSEN / CHECKED BY: J. ZORNE	FIELD INVESTIGATION BY: B. FEREZ			

BGS CIVIL LOG OF TEST BORINGS SHEET — ORIGINAL SCALE IN INCHES FOR REDUCED PLANS — CU EA — DISREGARD PRINTS BEARING EARLIER REVISION DATES — REVISION DATES — SHEET 61 OF 61

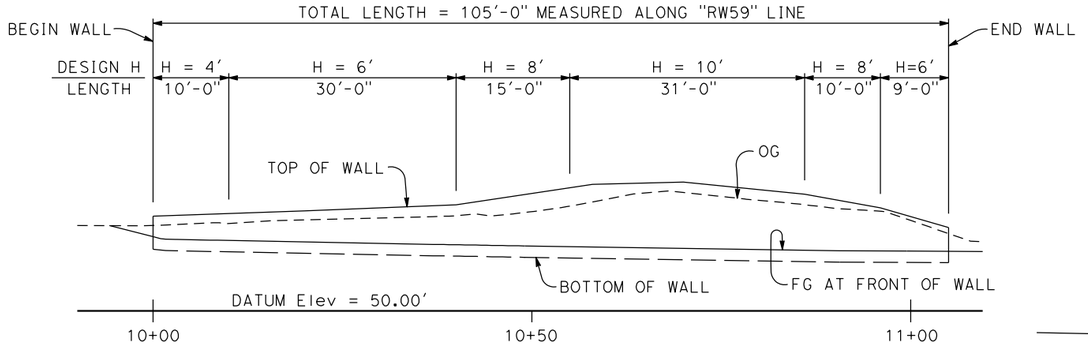

DEVELOPED ELEVATION

1" - 10'

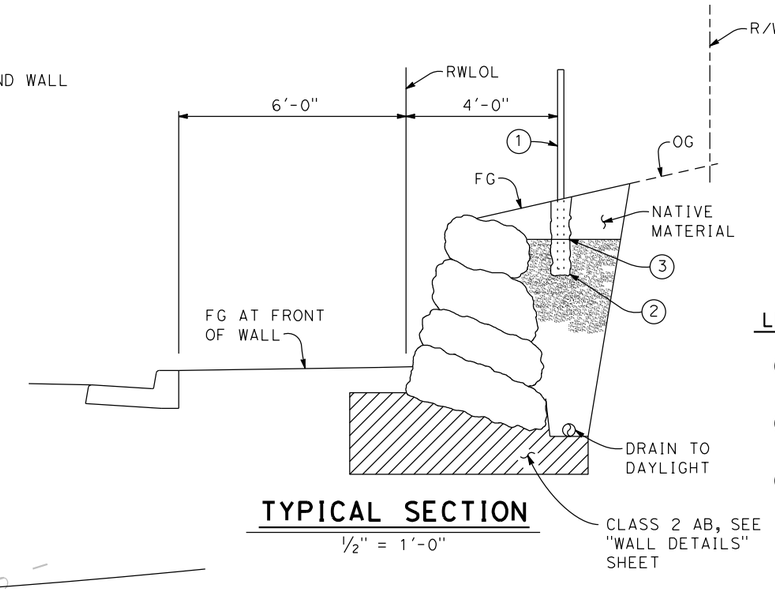

TYPICAL SECTION

½" = 1'-0"

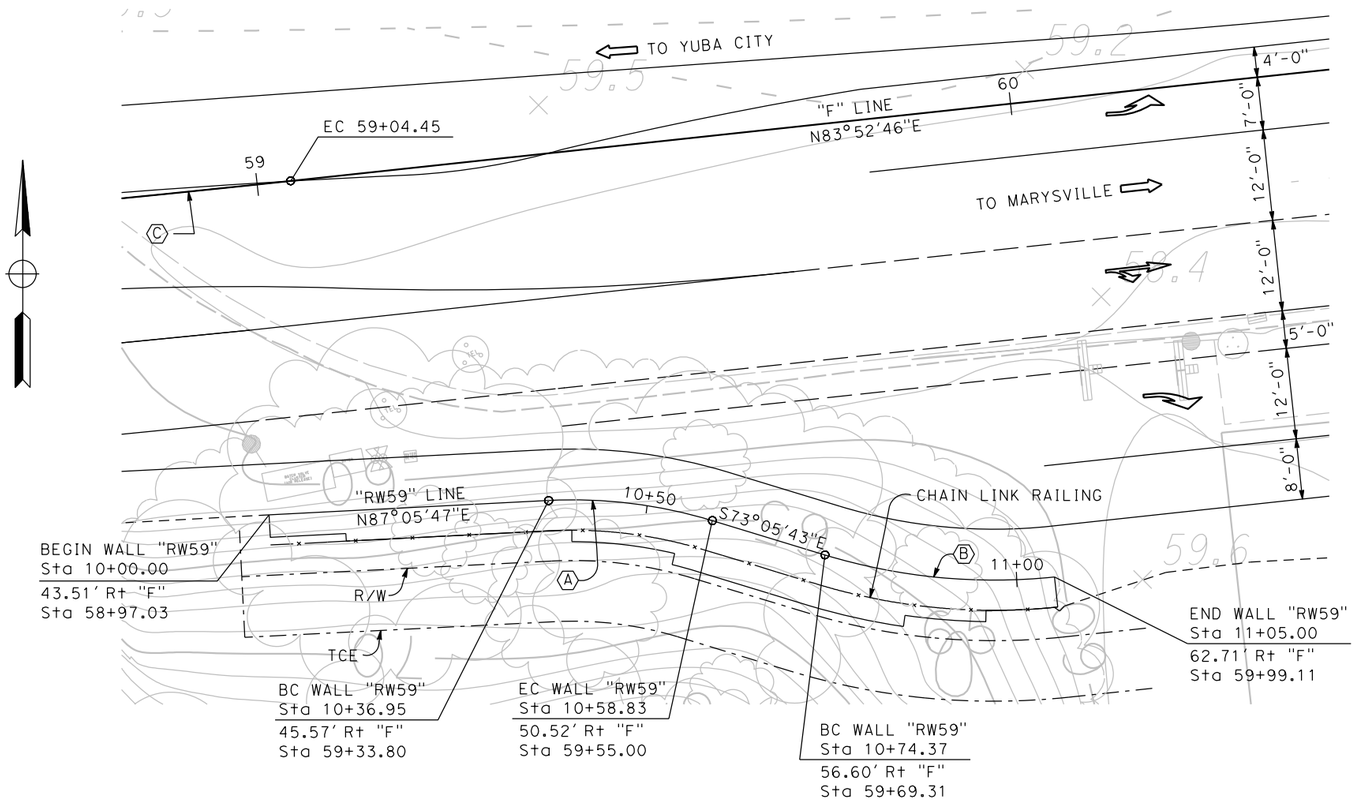

PLAN

1" - 10'

LEGEND

1. Chain Link Fence (Type CL-4 Vinyl Clad), color green.
2. Place Posts in 24" deep by 8" Ø holes with concrete backfill at 8' max spacing.
3. Cut filter fabric at post holes.

TOP OF WALL ELEVATIONS

Station	Elevation
10+00.00	62.5
10+20.00	63.2
10+40.00	64.0
10+58.00	66.7
10+70.00	67.0
10+86.00	65.4
10+96.00	63.6
11+05.00	61.0

INDEX TO PLANS

Sheet No.	Title
1	GENERAL PLAN
2	WALL DETAILS
3	LOG OF TEST BORINGS

CURVE DATA

Ⓐ	Ⓑ	Ⓒ
R = 63.29'	R = 76.71'	R = 2673.64'
△ = 19°48'31"	△ = 22°52'38"	△ = 9°06'01"
T = 11.05'	T = 15.52'	T = 212.78'
L = 21.88'	L = 30.63'	L = 424.66'

DIST	COUNTY	ROUTE	POST MILES TOTAL PROJECT	SHEET No	TOTAL SHEETS
03	Sut/Yub	Local			

REGISTERED CIVIL ENGINEER — DATE

PLANS APPROVAL DATE

REGISTERED PROFESSIONAL ENGINEER — M G MAECHLER — No. 42513 — Exp. 3-31-18 — CIVIL — STATE OF CALIFORNIA

CITY OF YUBA CITY
1201 CIVIC CENTER BOULEVARD
YUBA CITY, CA 95993

Dokken Engineering
110 Blue Ravine Rd, Suite 200
Folsom, CA 95630 (916) 858-0642

DESIGN OVERSIGHT	DESIGN	BY M. MAECHLER	CHECKED -	LOAD & RESISTANCE FACTOR DESIGN	LIVE LOADING: HL93 W/"LOW-BOY"; PERMIT DESIGN VEHICLE	PREPARED FOR THE CITY OF YUBA CITY DEPARTMENT OF PUBLIC WORKS	- PROJECT ENGINEER
SIGN OFF DATE	DETAILS	BY C. HOUGHTON	CHECKED	LAYOUT	BY M. MAECHLER CHECKED		BRIDGE NO. -
	QUANTITIES	BY	CHECKED	SPECIFICATIONS	BY PLANS AND SPECS COMPARED		POST MILES

RETAINING WALL No. 59
GENERAL PLAN

DESIGN GENERAL PLAN SHEET (ENGLISH) (REV.7/16/10)

ORIGINAL SCALE IN INCHES FOR REDUCED PLANS 0 1 2 3

UNIT: - PROJECT NUMBER & PHASE: - CONTRACT NO.: X

DISREGARD PRINTS BEARING EARLIER REVISION DATES →

REVISION DATES					SHEET	OF
x					1	3

FILE => J:\1858_5th_St_BR\517\RW59\1858_RW59_GP01.dgn

USERNAME => untitled DATE PLOTTED => 8/12/2016 TIME PLOTTED => 11:10:08 AM

DIST	COUNTY	ROUTE	POST MILES TOTAL PROJECT	SHEET No	TOTAL SHEETS
03	Sut/Yub	Local			

REGISTERED CIVIL ENGINEER DATE

PLANS APPROVAL DATE

REGISTERED PROFESSIONAL ENGINEER — M G MAECHLER — No. 42513 — Exp. 3-31-18 — CIVIL — STATE OF CALIFORNIA

CITY OF YUBA CITY
1201 CIVIC CENTER BOULEVARD
YUBA CITY, CA 95993

Dokken Engineering
110 Blue Ravine Rd, Suite 200
Folsom, CA 95630 (916) 858-0642

NOTES:

1. Facing rocks shall be placed in accordance with the Caltrans Standard Specification Section 72-2.03 "METHOD A PLACEMENT." Each stone shall be individually placed by equipment suitable for lifting, manipulating, and placing stones of the size and shape specified. Placing efforts shall ensure that each stone is firmly set and supported by underlying materials and adjacent stones. Loose stones shall be repositioned or replaced.
2. Widths of facing rocks shall be determined according to the specified base rock width and face batter.
3. A maximum tolerance of 6" may be applied toward the total base rock width. Do not consecutively place base rocks with widths less than 'W'.
4. Place facing rocks so that their height dimension is not greater than their width.
5. The longest dimension of the primary face rocks shall be perpendicular to face of wall.
6. Use angular, indurate, and non-fractured facing rocks.
7. Voids between rocks that are greater than 6 inches shall be chinked. Cap rocks shall be a minimum of 200 pounds and non movable by hand. Finishing rocks smaller than the cap rocks shall be grouted in place. Chinking is not allowed on the front face of the wall.
8. Excavate cut slopes to a stable configuration per OSHA requirements. Remove loose soil from cut slopes prior to placing filter fabric and rock facing. Stability of temporary cut slopes is the responsibility of the contractor. In any case temporary cut slopes should not be cut steeper than approved by the geotechnical engineer.

ROCKERY WALL SCHEDULE			
TOTAL HEIGHT (Ft)	MIN TOP WIDTH (Ft)	MIN BASE WIDTH (Ft)	SERVICE BEARING PRESSURE
4′	2′	3′	0.8 ksf
6′	2′	4′	1.3 ksf
8′	3′	5′-6"	1.7 ksf
10′	3′	8′	1.8 ksf

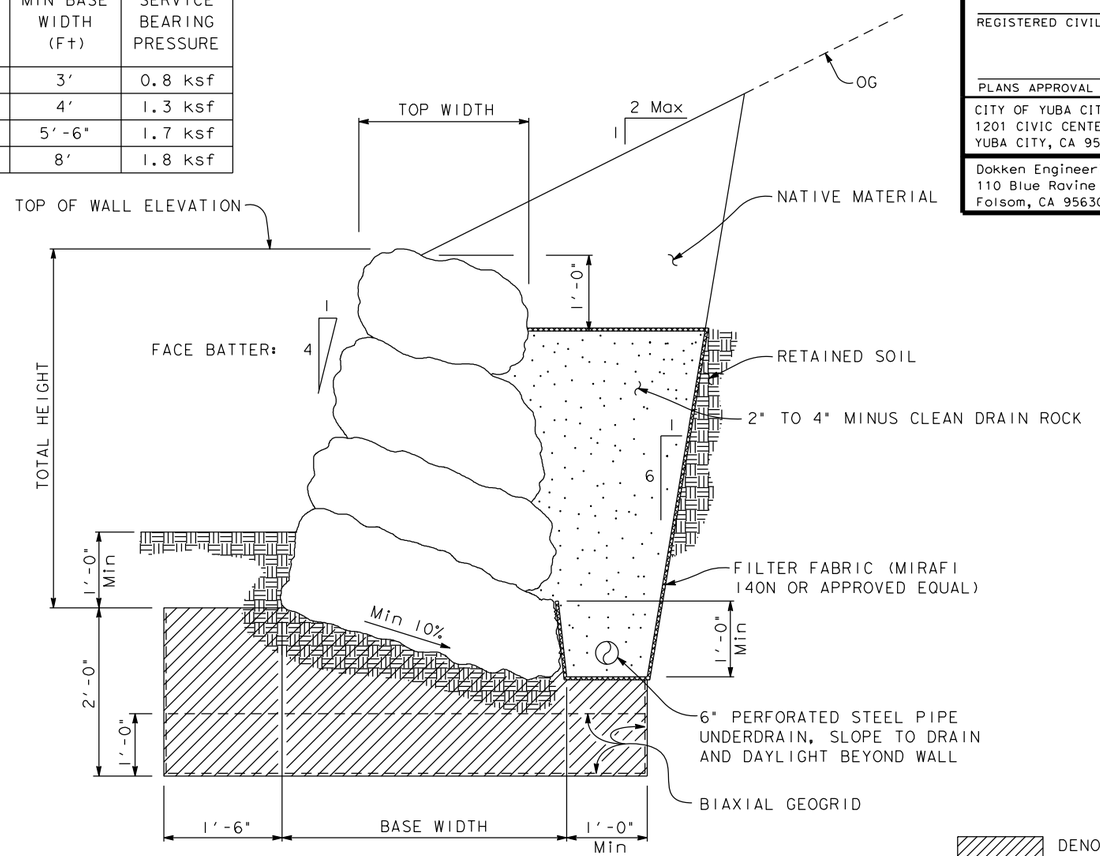

ROCKERY RETAINING WALL TYPICAL SECTION

NO SCALE

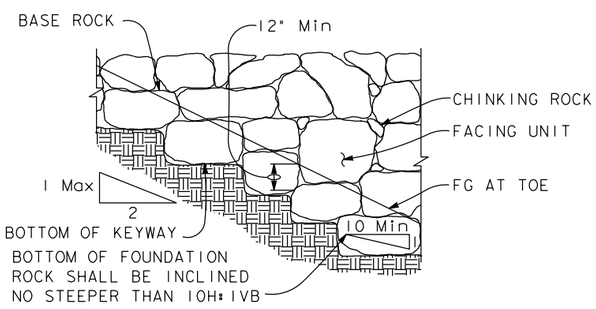

BASE ROCK PLACEMENT DETAIL (SLOPE FOOTING)

NO SCALE

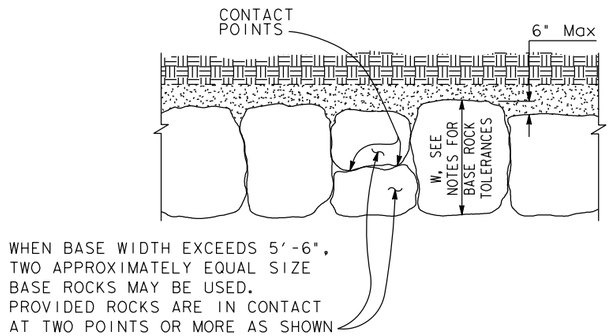

BASE ROCK PLACEMENT DETAIL (LEVEL FOOTING)

NO SCALE

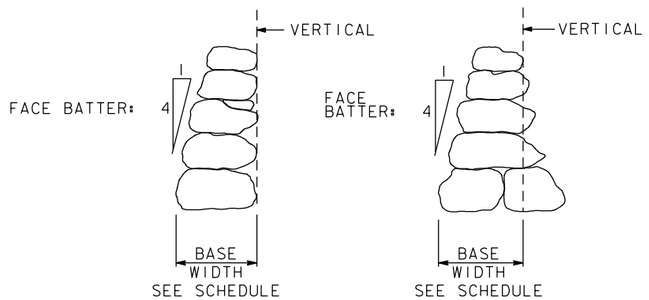

ROCK STACKING DETAIL

NO SCALE

DESIGN OVERSIGHT

SIGN OFF DATE

	BY	CHECKED
DESIGN	M. MAECHLER	-
DETAILS	C. HOUGHTON	
QUANTITIES		

PREPARED FOR THE CITY OF YUBA CITY DEPARTMENT OF PUBLIC WORKS

PROJECT ENGINEER

BRIDGE NO. -

POST MILES

RETAINING WALL NO. 59

WALL DETAILS

DESIGN DETAIL SHEET (ENGLISH) (REV.7/16/10)

ORIGINAL SCALE IN INCHES FOR REDUCED PLANS 0 1 2 3

UNIT:
PROJECT NUMBER & PHASE: CONTRACT NO.:

DISREGARD PRINTS BEARING EARLIER REVISION DATES

REVISION DATES

SHEET 2 OF 3

FILE => J:\1858_5th_St_BR\517\RW59\1858_RW59_MD01.dgn

USERNAME => untitled DATE PLOTTED => 8/12/2016 TIME PLOTTED => 11:10:24 AM

DIST	COUNTY	ROUTE	POST MILES TOTAL PROJECT	SHEET No.	TOTAL SHEETS
03	YUB			5	5

REGISTERED PROFESSIONAL ENGINEER

PLANS APPROVAL DATE

The State of California or its officers or agents shall not be responsible for the accuracy or completeness of electronic copies of this plan sheet.

GEOCON CONSULTANTS, INC.

Geocon Project No. S9853-05-03

This LOTB sheet was prepared in accordance with the Caltrans Soil & Rock Logging, Classification, and Presentation Manual (2010).

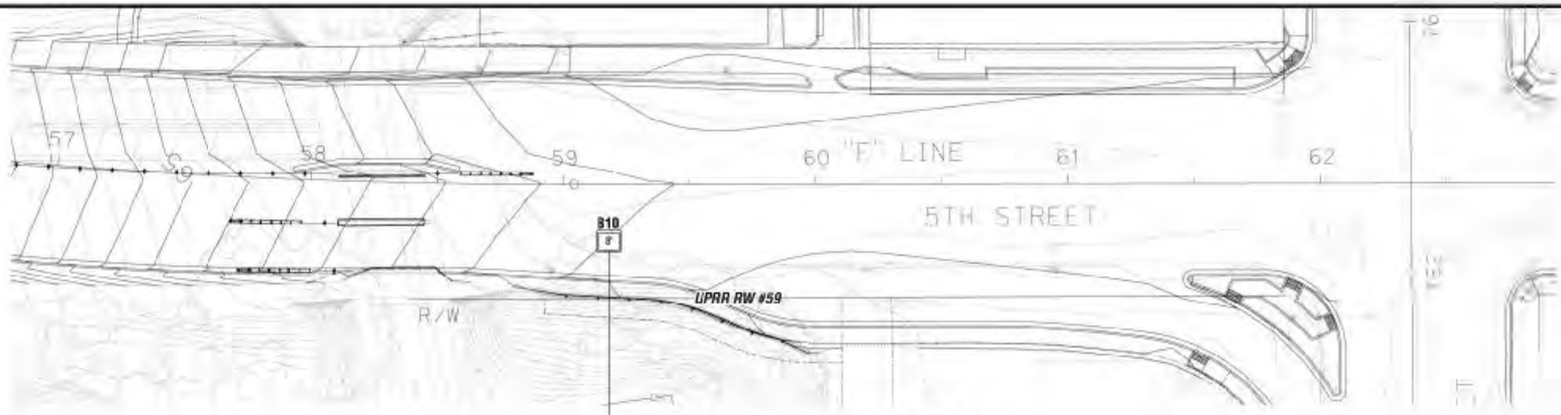

PLAN

1" = 30'

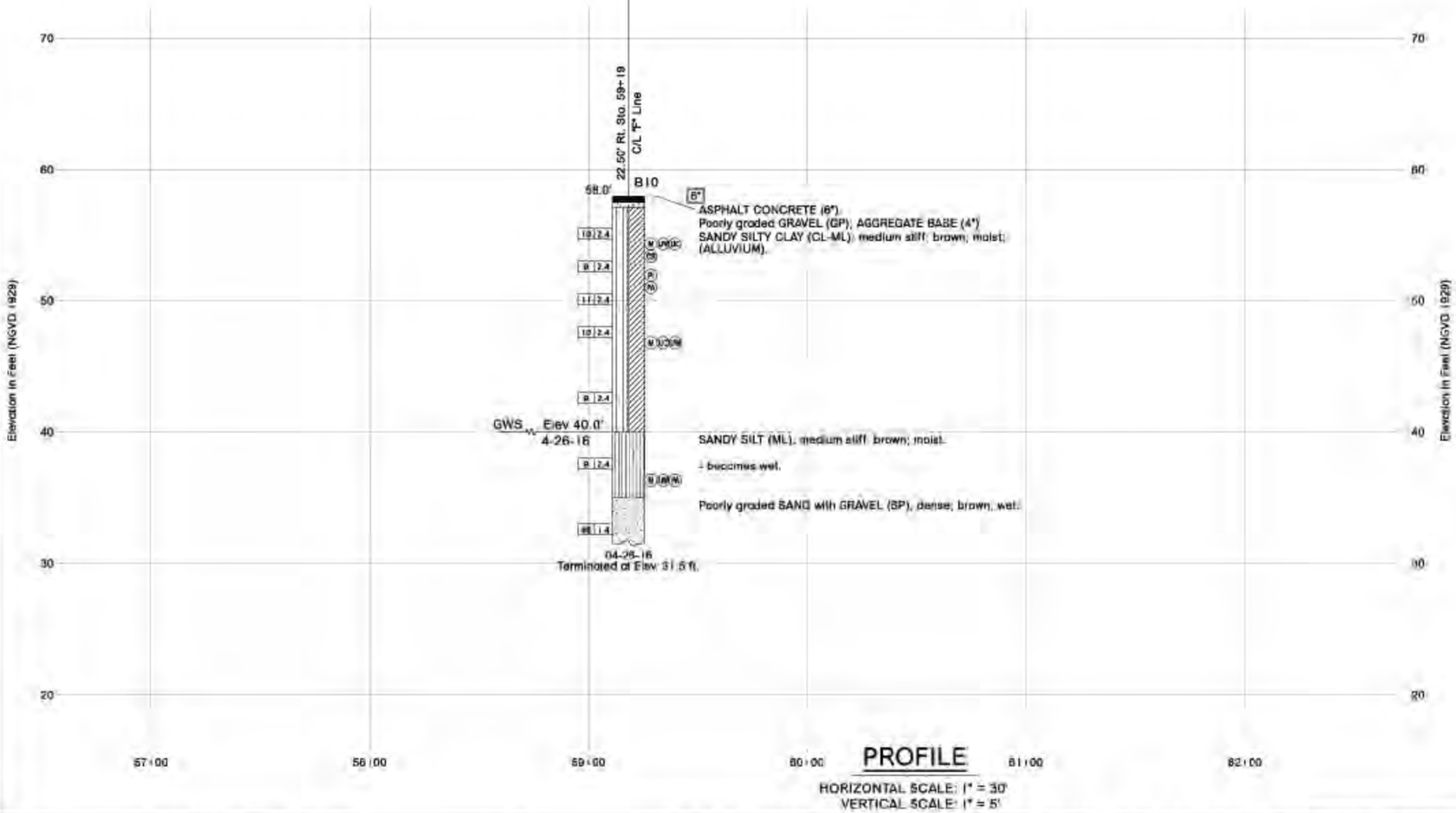

PROFILE

HORIZONTAL SCALE: 1" = 30'
VERTICAL SCALE: 1" = 5'

BENCH MARK

DESCRIPTION

Set Berntsen Spike V205 located at N2027792.376 E6896099.564, elevation 1,816.42 feet, NGVD 1929, per sheet SC-1 of undated "Survey Control" 65% plan provided by Dokken Engineering.

NOTES:

1. The consistency/apparent density descriptions are from Figures 2-9 and 2-10 of the Caltrans "Soil and Rock Logging, Classification, and Presentation Manual". These descriptors are based upon the Standard Penetration Test (ASTM D 1586)(uncorrected for Hammer Energy Ratio and the Modified California sampling method (ASTM D 3550). The descriptors based on the Mod Cal method have been modified by the utilization of the Burmister's (1948) input energy correction equation and NAVFAC DM 7.1.

2. Relatively undisturbed soil samples were obtained by driving a 3-inch outside diameter, with a 2.5-inch inside diameter (California Modified) split-spoon sampler for Modified California Sampling Methods and a 2-inch outside diameter split-spoon sampler for Standard Penetration Test Sampling Methods.

3. The boring logs and related information represent the opinion of the professional engineer as to the character of the material at the locations shown. Soil and groundwater conditions between adjacent test holes and at other locations may differ from those shown. Groundwater conditions may change with passage of time.

4. Test boring elevations are approximate based on topographic base sheet mapping prepared for this project.

5. Test boring locations were determined in the field based on staking and pacing from mapped site features. The locations of the explorations should be considered accurate only to the degree implied by the measuring methods used.

6. A downhole 140-pound automatic hammer falling 30 inches was used to drive samplers.

7. Visual classification of earth materials was based on field inspection and was confirmed or revised with laboratory test results.

ENGINEERING SERVICES		GEOTECHNICAL SERVICES	PREPARED FOR THE STATE OF CALIFORNIA DEPARTMENT OF TRANSPORTATION	DIVISION OF ENGINEERING SERVICES STRUCTURE DESIGN DESIGN BRANCH	BRIDGE NO. / POST MILES	RETAINING WALL NO. 59 LOG OF TEST BORINGS
FUNCTIONAL SUPERVISOR / NAME	DRAWN BY: D. HANSEN / CHECKED BY: J. ZORNE	FIELD INVESTIGATION BY: B. PEREZ				

205 CIVIL LOG OF TEST BORINGS SHEET — ORIGINAL SCALE IN INCHES FOR REDUCED PLANS 0 1 2 3 — CU EA — DISREGARD PRINTS BEARING EARLIER REVISION DATES — REVISION DATES — SHEET 3 OF 3

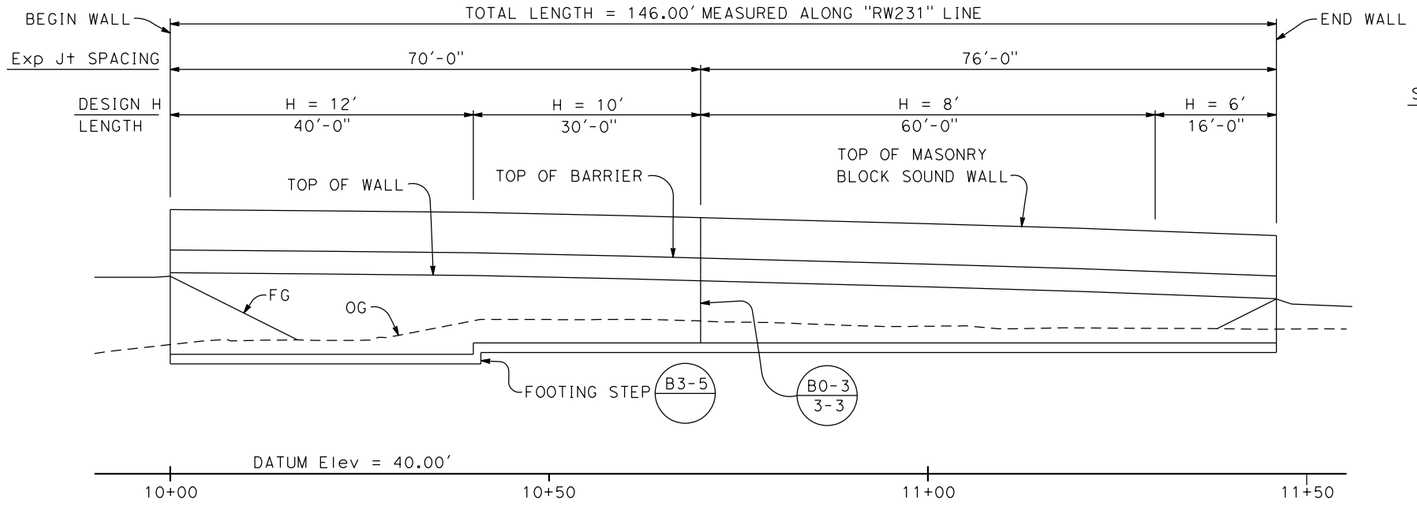

INDEX TO PLANS

Sheet No.	Title
1	GENERAL PLAN
2	RETAINING WALL TYPE 1SWB - DETAILS No. 1
3	RETAINING WALL TYPE 1SWB - DETAILS No. 2
4	SOUND WALL DETAILS
5	ARCHITECTURAL DETAILS
6	LOG OF TEST BORINGS

DIST	COUNTY	ROUTE	POST MILES TOTAL PROJECT	SHEET No	TOTAL SHEETS
03	Sut/Yub	Local			

REGISTERED CIVIL ENGINEER _____ DATE _____

PLANS APPROVAL DATE _____

REGISTERED PROFESSIONAL ENGINEER — M G MAECHLER — No. 42513 — Exp. 3-31-18 — CIVIL — STATE OF CALIFORNIA

CITY OF YUBA CITY
1201 CIVIC CENTER BOULEVARD
YUBA CITY, CA 95993

Dokken Engineering
110 Blue Ravine Rd, Suite 200
Folsom, CA 95630 (916) 858-0642

TOP OF WALL ELEVATIONS	
STATION	ELEVATION (FT)
10+00.00	66.48
10+20.00	66.31
10+40.00	66.06
10+60.00	65.61
10+80.00	65.10
11+00.00	64.53
11+20.00	63.83
11+46.00	62.82

DEVELOPED MIRROR ELEVATION

1" - 10'

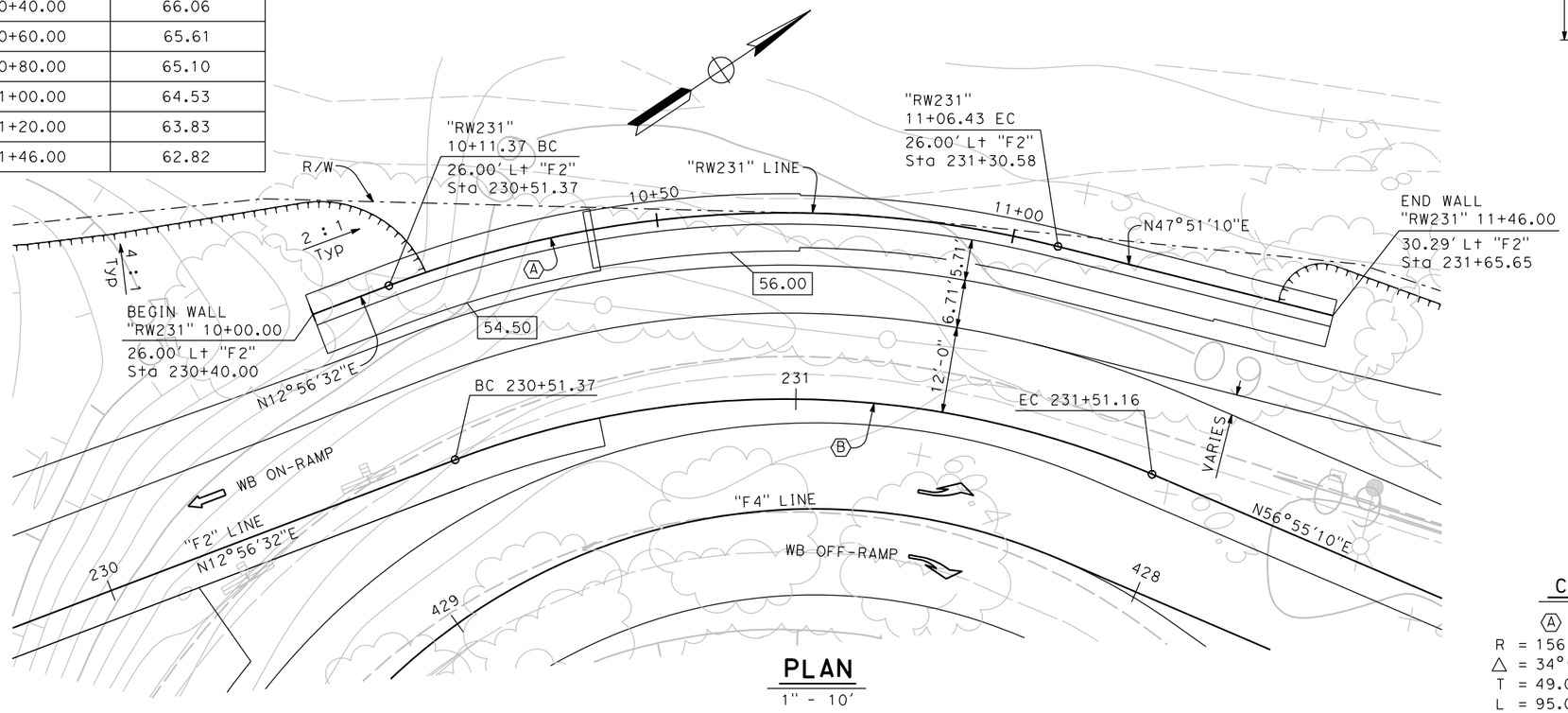

PLAN

1" - 10'

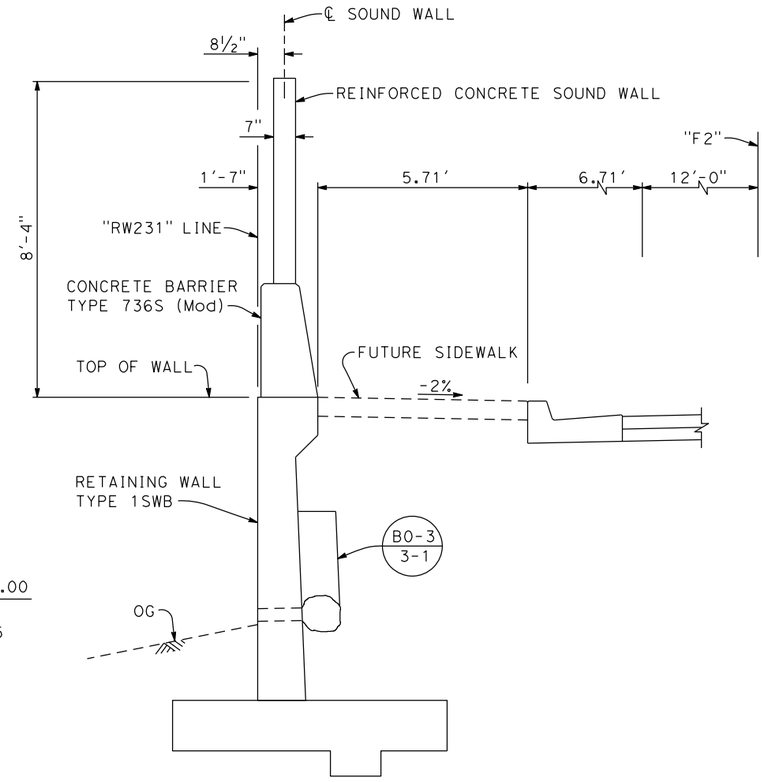

TYPICAL SECTION

½" = 1'-0"

CURVE DATA

Ⓐ	Ⓑ
R = 156.00'	R = 130.00'
△ = 34°54'38"	△ = 43°58'38"
T = 49.05'	T = 52.49'
L = 95.05'	L = 99.78'

LEGEND:

XX.XX Denotes bottom of footing elev

DESIGN OVERSIGHT	DESIGN	BY M. MAECHLER	CHECKED	LOAD & RESISTANCE FACTOR DESIGN	LIVE LOADING: HL93 W/"LOW-BOY"; PERMIT DESIGN VEHICLE			PREPARED FOR THE CITY OF YUBA CITY DEPARTMENT OF PUBLIC WORKS	- PROJECT ENGINEER	BRIDGE NO. -	RETAINING WALL NO. 231
SIGN OFF DATE	DETAILS	BY C. HOUGHTON	CHECKED	LAYOUT	BY M. MEACHLER	CHECKED				POST MILES	GENERAL PLAN
	QUANTITIES	BY	CHECKED	SPECIFICATIONS	BY	PLANS AND SPECS COMPARED					

DESIGN GENERAL PLAN SHEET (ENGLISH) (REV.7/16/10)

ORIGINAL SCALE IN INCHES FOR REDUCED PLANS 0 1 2 3

UNIT: - PROJECT NUMBER & PHASE: - CONTRACT NO.: X

DISREGARD PRINTS BEARING EARLIER REVISION DATES →

REVISION DATES					SHEET	OF
X					1	6

FILE => J:\1858_5th_St_BR\517\RW231\1858_RW231_GP01.dgn

USERNAME => untitled DATE PLOTTED => 8/12/2016 TIME PLOTTED => 11:12:21 AM

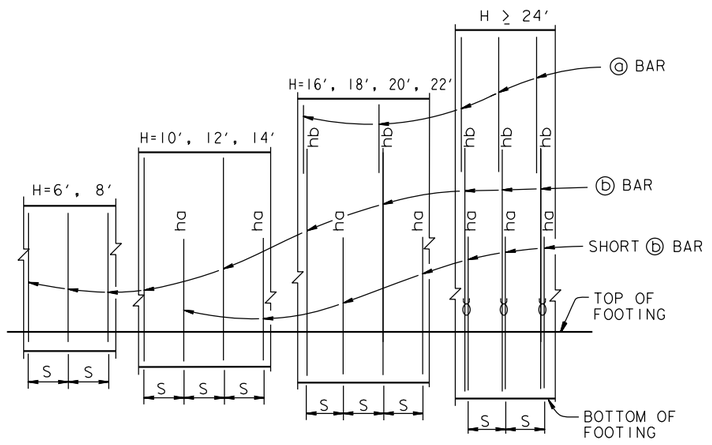

ELEVATION
No Scale

NOTES:

"ha" and "hb" above ⓑ bars indicate distance from top of footing to upper end of ⓑ bars, see table.
"S" is ⓑ bar spacing, see table.
ϑ : 2 bar bundle

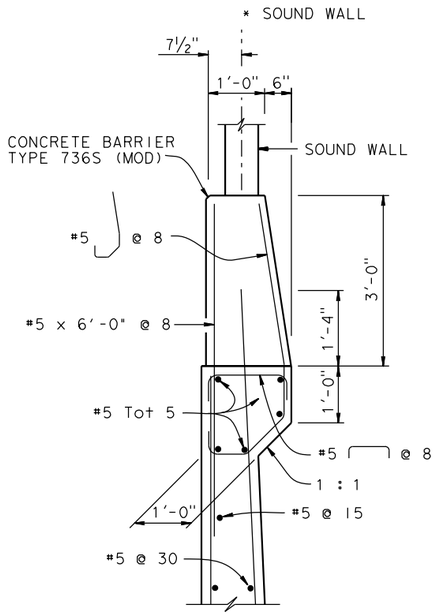

DETAIL A
¾ = 1'-0"

DESIGN DATA

Design: AASHTO LRFD Bridge Design Specifications, 4th edition with California Amendments

WS: 33 psf on Sound Wall and Barrier

LS: Varied surcharge on level ground surface

CT: 54 kip maximum traffic impact loading evenly distributed over 10 feet at top of the barrier and 1:1 distribution down and outward

EQE: Mononabe-Okabe Method
K_h = 0.3
K_v = 0.0

Soil: Ø = 34°
γ = 120 pcf

Reinforced Concrete: f'c = 3600 psi
fy = 60,000 psi

Load Combinations and Limit States

Service I	Q=1.00DC+1.00EV+1.00EH+1.00LS+0.30WS
Service II	Q=1.00DC+1.00EV+1.00EH+1.00WS
Strength I	Q=αDC+βEV+1.50EH+1.75LS
Strength III	Q=αDC+βEV+1.50EH+1.40WS
Strength V	Q=αDC+βEV+1.50EH+1.35LS+0.40WS
Extreme I	Q=1.00DC+1.00EV+1.00EH+1.00EQD+1.00EQE
Extreme II	Q=1.00DC+1.00EV+1.00EH+1.00CT

Where: Q: Force Effects
α: 1.25 or 0.90, Which ever Controls Design
β: 1.35 or 1.00, which ever Controls Design
DC: Dead Load of Structure Components
EV: Vertical Earth Fill Pressure
LS: Live Load Surcharge
EQE: Seismic Earth Pressure
EQD: Soil and Structure Components Inertia. Soil inertia ignored for stem design
WS: Wind Load on Sound Wall and Barrier
CT: Vehicular Collision Force

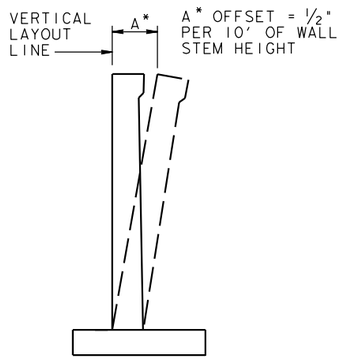

WALL OFFSET
No Scale

Values for offsetting forms to be determined by the Engineer

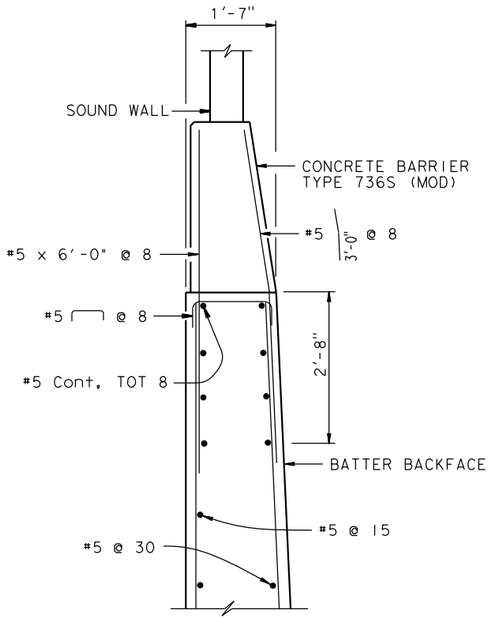

OPTIONAL DETAIL A
¾ = 1'-0"

For Details not shown, see "DETAIL A"

NOTES:

1. For sound wall and retaining wall Architectural finish or texture see details elsewhere in Project Plans
2. For details not shown and drainage notes see B3-5
3. Footing cover, 1'-6" minimum.
4. For sound wall and barrier reinforcement details, see "SOUND WALL - MASONRY BLOCK WITH BARRIER ON RETAINING WALL" sheet.
5. For H = 6' through 14', extend ⓑ bars into Barrier for stem with haunch.
6. For H ≥ 16', extend ⓐ bars into Barrier for stem with haunch.

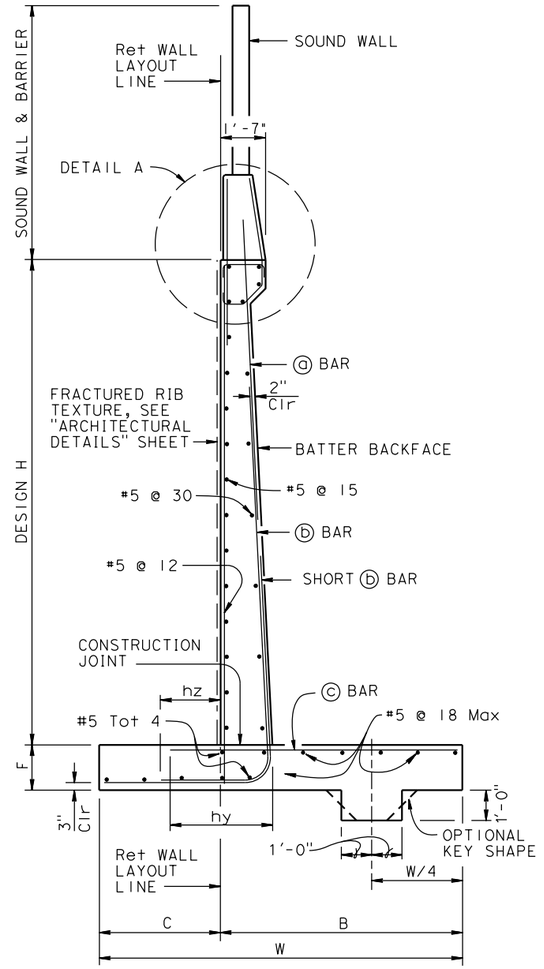

SPREAD FOOTING SECTION
No Scale

DIST	COUNTY	ROUTE	POST MILES TOTAL PROJECT	SHEET No	TOTAL SHEETS
03	Sut/Yub	Local			

REGISTERED CIVIL ENGINEER DATE

PLANS APPROVAL DATE

REGISTERED PROFESSIONAL ENGINEER — M G MAECHLER — No. 42513 — Exp. 3-31-18 — CIVIL — STATE OF CALIFORNIA

CITY OF YUBA CITY
1201 CIVIC CENTER BOULEVARD
YUBA CITY, CA 95993

Dokken Engineering
110 Blue Ravine Rd, Suite 200
Folsom, CA 95630 (916) 858-0642

DESIGN OVERSIGHT

SIGN OFF DATE

	BY	CHECKED
DESIGN	M. MAECHLER	
DETAILS	C. HOUGHTON	
QUANTITIES		

PREPARED FOR THE CITY OF YUBA CITY DEPARTMENT OF PUBLIC WORKS

PROJECT ENGINEER

BRIDGE NO. -
POST MILES

RETAINING WALL NO. 231
RETAINING WALL TYPE 1SWB-DETAILS No. 1

DESIGN DETAIL SHEET (ENGLISH) (REV.7/16/10)

ORIGINAL SCALE IN INCHES FOR REDUCED PLANS 0 1 2 3

UNIT:
PROJECT NUMBER & PHASE: CONTRACT NO.:

DISREGARD PRINTS BEARING EARLIER REVISION DATES →

REVISION DATES: - | | | |

SHEET 2 OF 6

FILE => J:\1858_5th_St_BR\517\RW231\1858_RW231_MD01.dgn

USERNAME => untitled DATE PLOTTED => 8/12/2016 TIME PLOTTED => 11:12:34 AM

DIST	COUNTY	ROUTE	POST MILES TOTAL PROJECT	SHEET No	TOTAL SHEETS
03	Sut/Yub	Local			

REGISTERED CIVIL ENGINEER DATE

PLANS APPROVAL DATE

REGISTERED PROFESSIONAL ENGINEER — M G MAECHLER — No. 42513 — Exp. 3-31-18 — CIVIL — STATE OF CALIFORNIA

CITY OF YUBA CITY
1201 CIVIC CENTER BOULEVARD
YUBA CITY, CA 95993

Dokken Engineering
110 Blue Ravine Rd, Suite 200
Folsom, CA 95630 (916) 858-0642

TABLE OF REINFORCING STEEL DIMENSIONS AND DATA

DESIGN H	6′	8′	10′	12′	14′	16′	18′	20′	22′	24′	26′	28′	30′	32′
W	6′-9"	7′-3"	8′-0"	8′-9"	10′-0"	11′-6"	12′-9"	14′-0"	15′-9"	18′-0"	19′-9"	21′-9"	23′-3"	25′-3"
C	2′-3"	2′-5"	2′-8"	2′-11"	3′-4"	3′-10"	4′-3"	4′-8"	5′-3"	6′-0"	6′-7"	7′-3"	7′-9"	8′-5"
B	4′-6"	4′-10"	5′-4"	5′-10"	6′-8"	7′-8"	8′-6"	9′-4"	10′-6"	12′-0"	13′-2"	14′-6"	15′-6"	16′-10"
F SPREAD FOOTING	1′-3"	1′-3"	1′-3"	1′-3"	1′-6"	1′-9"	1′-9"	2′-3"	2′-6"	2′-6"	2′-9"	3′-0"	3′-6"	3′-9"
STEM WITH HAUNCH, BATTER	0	1/2:12	1/2:12	1/2:12	1/2:12	1/2:12	1/2:12	1/2:12	1/2:12	5/8:12	3/4:12	7/8:12	1:12	1:12
STEM WITHOUT HAUNCH, BATTER	0	0	0	0	0	0	0	0	1/4:12	1/4:12	1/2:12	3/4:12	3/4:12	3/4:12
ⓐ BARS						#7 @ 14	#7 @ 12	#7 @ 12	#8 @ 12	#6 @ 6	#6 @ 6	#6 @ 6	#8 @ 9	#9 @ 9
ⓑ BARS	#8 @ 12	#8 @ 12	#7 @ 6	#7 @ 6	#7 @ 6	#9 @ 7	#9 @ 6	#10 @ 6	#10 @ 6	#8 @ 6 ϑ	#8 @ 6 ϑ	#8 @ 6 ϑ	#10 @ 9 ϑ	#11 @ 9 ϑ
ha			5′-0"	6′-0"	7′-6"	7′-0"	6′-0"	7′-0"	7′-6"	7′-6"	8′-6"	9′-3"	15′-0"	11′-3"
hb						11′-6"	12′-0"	14′-0"	16′-0"	15′-6"	17′-6"	18′-9"	21′-0"	20′-9"
hy	2′-0"	2′-4"	1′-8"	2′-0"	2′-4"	2′-10"	2′-10"	3′-7"	3′-7"	4′-6"	5′-6"	2′-10"	4′-6"	5′-6"
hz			0	0	3′-1"	3′-7"	4′-0"	4′-5"	5′-0"	3′-0"	3′-0"	3′-6"	5′-6"	3′-0"
ⓒ BARS	#6 @ 12	#7 @ 12	#5 @ 6	#6 @ 6	#7 @ 6	#8 @ 7	#8 @ 6	#9 @ 6	#9 @ 6	#10 @ 6	#11 @ 6	#8 @ 6 ϑ	#10 @ 9 ϑ	#11 @ 9 ϑ
SER I: B′(ft), q_0'(ksf)	5.9, 1.2	6.0, 1.4	6.5, 1.6	7.0, 1.8	8.1, 1.9	9.7, 2.0	11.0, 2.1	12.1, 2.3	13.8, 2.4	16.6, 2.4	18.5, 2.6	20.7, 2.7	22.1, 2.9	24.3, 3.0
STR Ia: B′(ft), q_0(ksf)	6.3, 1.9	6.3, 2.3	6.7, 2.5	7.0, 2.9	8.1, 3.1	9.5, 3.2	10.8, 3.4	11.8, 3.7	13.4, 4.0	16.2, 4.0	18.0, 4.2	20.2, 4.4	21.5, 5.0	23.7, 5.0
STR, Ib: B′(ft), q_0(ksf)	4.3, 1.6	4.1, 2.0	4.3, 2.4	4.5, 2.8	5.5, 2.9	6.9, 2.9	8.2, 3.0	9.0, 3.4	10.4, 3.5	13.2, 3.4	14.8, 3.5	16.9, 3.6	18.0, 3.9	20.1, 4.1
STR, IIIa: B′(ft), q_0(ksf)	4.3, 2.1	4.8, 2.4	5.5, 2.5	6.2, 2.8	7.4, 2.9	9.1, 3.0	10.4, 3.2	11.5, 3.7	13.3, 3.7	16.1, 3.8	18.0, 4.0	20.3, 4.2	21.6, 4.6	23.8, 4.9
STR, IIIb: B′(ft), q_0(ksf)	3.2, 2.1	3.6, 2.3	4.2, 2.4	4.7, 2.6	5.9, 2.7	7.4, 2.7	8.6, 2.8	9.5, 3.1	11.2, 3.0	14.0, 3.2	15.8, 3.3	17.9, 3.4	19.1, 3.7	21.2, 3.9
STR, Va: B′(ft), q_0(ksf)	5.9, 2.0	5.9, 2.3	6.4, 2.6	6.8, 2.9	7.9, 3.1	9.4, 3.2	10.6, 3.4	11.7, 3.9	13.4, 3.9	16.1, 4.0	18.0, 4.2	20.2, 4.5	21.5 4.9	23.7, 5.1
STR, Vb: B′(ft), q_0(ksf)	3.8, 1.7	3.8, 2.1	4.2, 2.5	4.4, 2.8	5.5, 2.9	7.0, 2.9	8.2, 3.0	9.0, 3.3	10.5, 3.4	13.3, 3.3	15.0, 3.5	17.1, 3.6	18.2 3.9	20.3, 4.0
Ext I: B′(ft), q_0(ksf)	5.3, 1.7	4.6, 2.5	4.1, 3.5	3.4, 5.0	1.3, 13.3	1.7, 12.4	1.9, 13.2	1.9 17.6	2.5, 15.0	4.5, 10.2	5.3, 10.0	6.6, 9.6	6.8, 10.8	8.1, 10.5
Ext II: B′(ft), q_0(ksf)	1.4, 4.9	2.5, 3.5	3.8, 2.8	4.9, 2.7	6.6, 2.5	8.6, 2.5	10.1, 2.5	11.5, 2.6	13.5, 2.8	16.4, 2.8	18.4, 2.9	20.7, 3.1	22.1, 3.3	24.4, 3.5

LEGEND:

SER: service limit state

STR: strength limit state

EXT: extreme event limit state

B′ : effective footing width (ft)

q_0' : net bearing stress (ksf)

q_0 : gross uniform bearing stress (ksf)

ϑ : 2 bar bundle

DESIGN OVERSIGHT

SIGN OFF DATE

DESIGN DETAIL SHEET (ENGLISH) (REV.7/16/10)

	BY	CHECKED
DESIGN	M. MAECHLER	
DETAILS	C. HOUGHTON	
QUANTITIES		

ORIGINAL SCALE IN INCHES FOR REDUCED PLANS 0 1 2 3

PREPARED FOR THE CITY OF YUBA CITY DEPARTMENT OF PUBLIC WORKS

PROJECT ENGINEER

UNIT:
PROJECT NUMBER & PHASE: CONTRACT NO.:

BRIDGE NO. -
POST MILES

RETAINING WALL NO. 231

RETAINING WALL TYPE 1SWB-DETAILS No. 2

DISREGARD PRINTS BEARING EARLIER REVISION DATES →

REVISION DATES: - | | | |

SHEET 3 OF 6

FILE => J:\1858_5th_St_BR\517\RW231\1858_RW231_MD02.dgn

USERNAME => untitled DATE PLOTTED => 8/12/2016 TIME PLOTTED => 11:12:46 AM

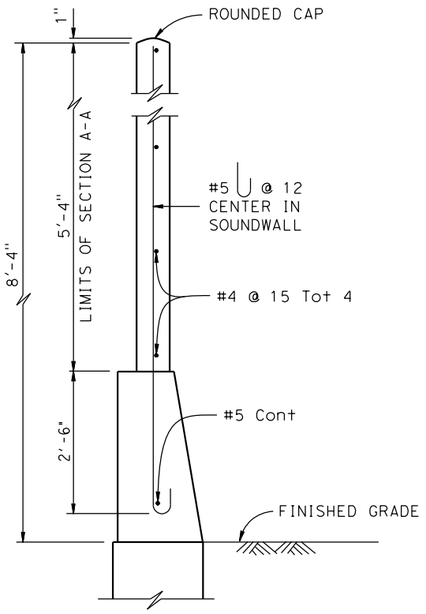

TYPICAL SECTION

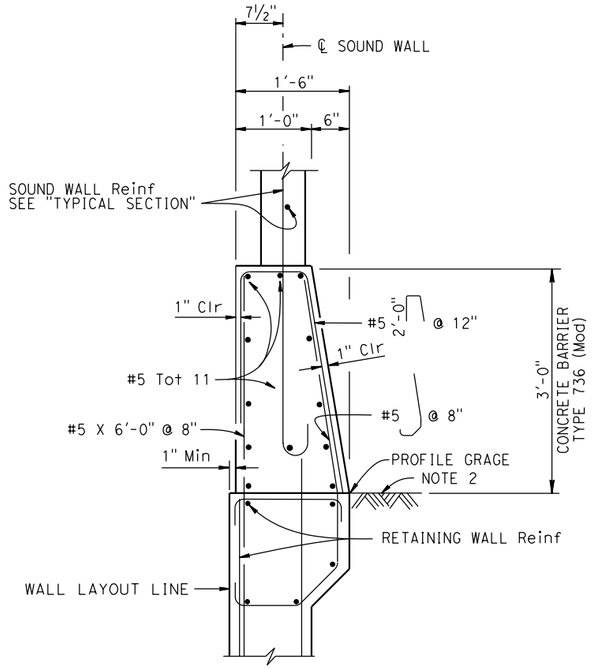

BARRIER SECTION

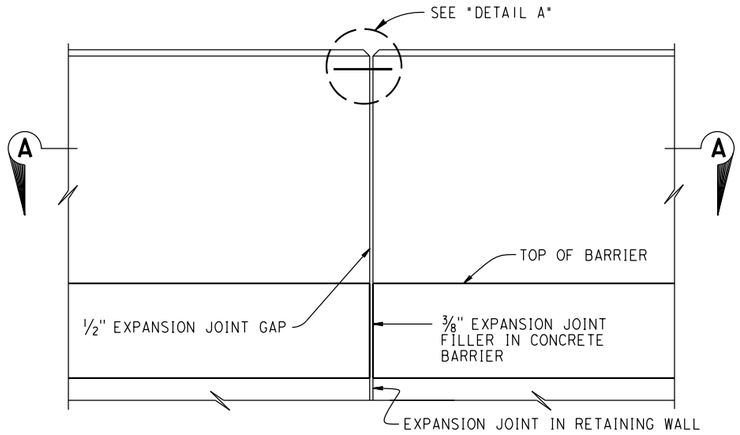

ALIGNMENT KEY DETAIL

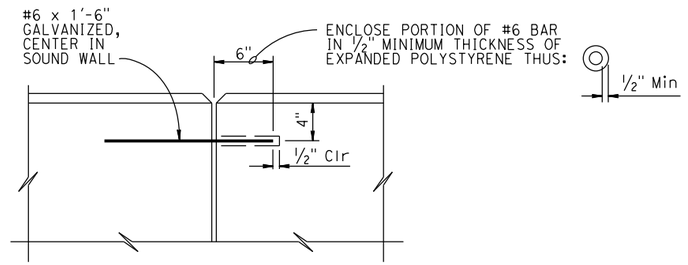

DETAIL A

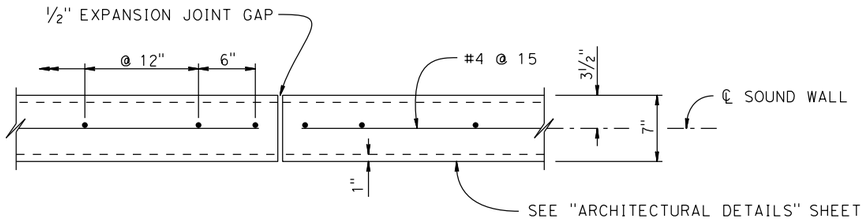

PART SECTION A-A

DESIGN NOTES

DESIGN

Uniform Building Code, 1997 Edition and the Bridge Design Specifications

DESIGN WIND LOAD

33 psf

DESIGN SEISMIC LOAD

0.57 Dead load

REINFORCED CONCRETE

f'c = 3600 psi
fy = 60 ksi

NOTES:

1. For details not shown, see STANDARD PLAN B15-6
2. Slope ground at traffic side of barrier to drain. Maximum slope ±10% See STANDARD PLAN B11-56, Note 3.

NO SCALE

DIST	COUNTY	ROUTE	POST MILES TOTAL PROJECT	SHEET No	TOTAL SHEETS
03	Sut/Yub	Local			

REGISTERED CIVIL ENGINEER _____ DATE _____

PLANS APPROVAL DATE _____

REGISTERED PROFESSIONAL ENGINEER — M G MAECHLER — No. 42513 — Exp. 3-31-18 — CIVIL — STATE OF CALIFORNIA

CITY OF YUBA CITY
1201 CIVIC CENTER BOULEVARD
YUBA CITY, CA 95993

Dokken Engineering
110 Blue Ravine Rd, Suite 200
Folsom, CA 95630 (916) 858-0642

RETAINING WALL NO. 231

CONCRETE SOUND WALL WITH BARRIER ON RETAINING WALL

SOUNDWALL DETAILS

DESIGN OVERSIGHT		DESIGN	BY M. MAECHLER — CHECKED
SIGN OFF DATE		DETAILS	BY C. HOUGHTON — CHECKED
		QUANTITIES	BY — CHECKED

PREPARED FOR THE
CITY OF YUBA CITY
DEPARTMENT OF PUBLIC WORKS

PROJECT ENGINEER

BRIDGE NO. -
POST MILES

DESIGN DETAIL SHEET (ENGLISH) (REV.7/16/10)

ORIGINAL SCALE IN INCHES FOR REDUCED PLANS 0 1 2 3

UNIT:
PROJECT NUMBER & PHASE: CONTRACT NO.:

DISREGARD PRINTS BEARING EARLIER REVISION DATES →

REVISION DATES				SHEET	OF
-				4	6

FILE => J:\1858_5th_St_BR\517\RW231\1858_RW231_MD03.dgn

USERNAME => untitled DATE PLOTTED => 8/12/2016 TIME PLOTTED => 11:12:57 AM

DIST	COUNTY	ROUTE	POST MILES TOTAL PROJECT	SHEET No	TOTAL SHEETS
03	Sut/Yub	Local			

REGISTERED CIVIL ENGINEER DATE

PLANS APPROVAL DATE

REGISTERED PROFESSIONAL ENGINEER — M G MAECHLER — No. 42513 — Exp. 3-31-18 — CIVIL — STATE OF CALIFORNIA

CITY OF YUBA CITY
1201 CIVIC CENTER BOULEVARD
YUBA CITY, CA 95993

Dokken Engineering
110 Blue Ravine Rd, Suite 200
Folsom, CA 95630 (916) 858-0642

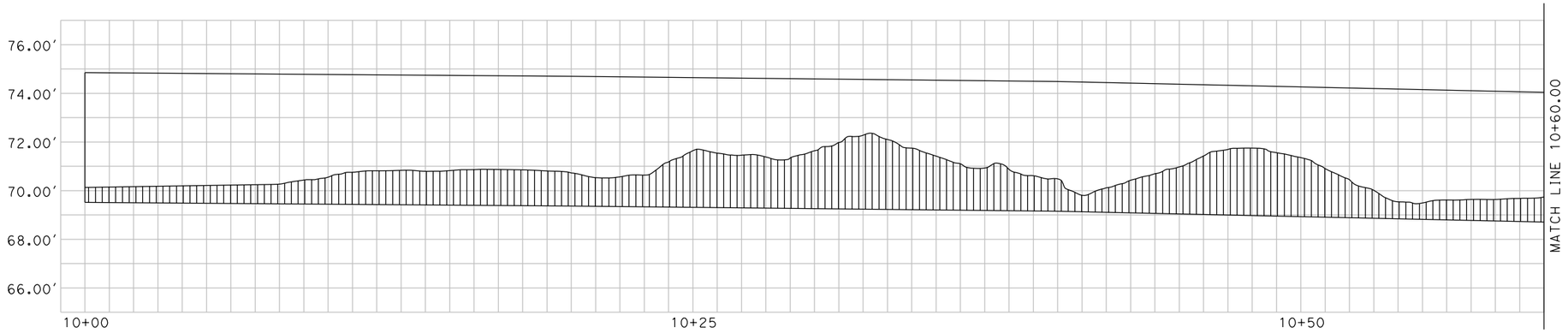

ELEVATION - Sta 10+00 TO 10+60

3/8" = 1'-0"

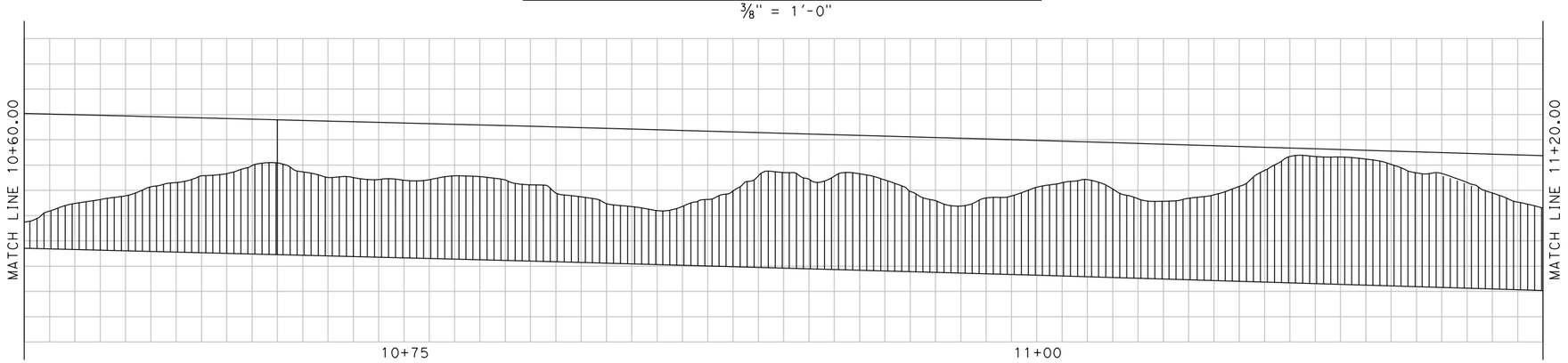

ELEVATION - Sta 10+60 TO 11+20

3/8" = 1'-0"

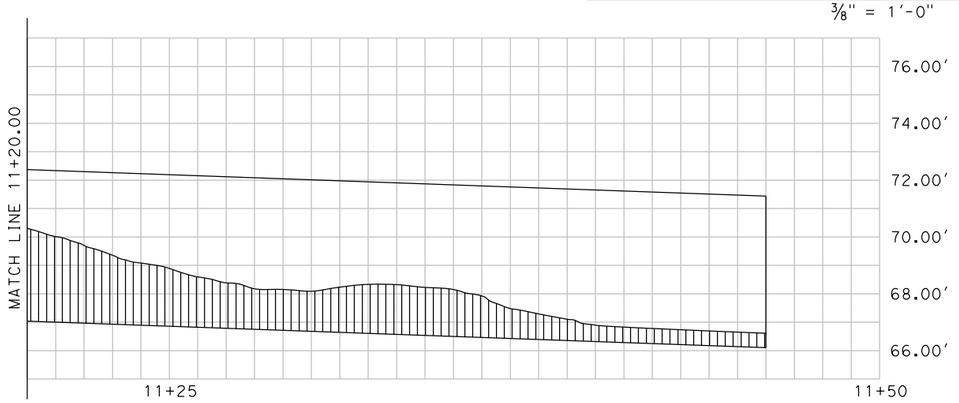

ELEVATION - Sta 11+20 TO 11+50

3/8" = 1'-0"

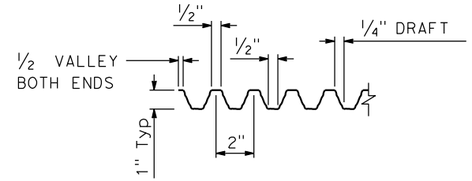

FRACTURED RIB TEXTURE

3" = 1'-0"

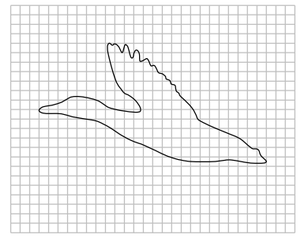

VARIATION 4

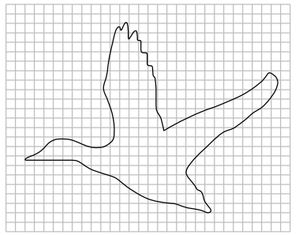

VARIATION 1

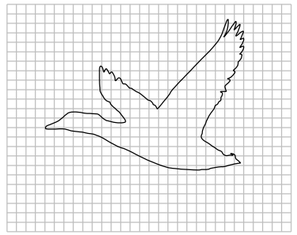

VARIATIAN 2

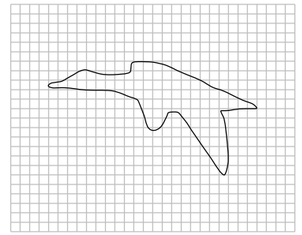

VARIATION 3

DUCK PATTERN DETAIL

1 1/2" = 1'-0"

LEGEND:

DENOTES FRACTURED RIB TEXTURE

DESIGN OVERSIGHT		DESIGN	BY M. MAECHLER	CHECKED	PREPARED FOR THE CITY OF YUBA CITY DEPARTMENT OF PUBLIC WORKS	- PROJECT ENGINEER	BRIDGE NO. - POST MILES
SIGN OFF DATE		DETAILS	BY C. HOUGHTON	CHECKED			
		QUANTITIES	BY	CHECKED			

RETAINING WALL NO. 231

CONCRETE SOUND WALL WITH BARRIER ON RETAINING WALL

ARCHITECTURAL DETAILS

DESIGN DETAIL SHEET (ENGLISH) (REV.7/16/10)

ORIGINAL SCALE IN INCHES FOR REDUCED PLANS 0 1 2 3

UNIT:
PROJECT NUMBER & PHASE: CONTRACT NO.:

DISREGARD PRINTS BEARING EARLIER REVISION DATES →

REVISION DATES					SHEET	OF
-					5	6

FILE => J:\1858_5th_St_BR\517\RW231\1858_RW231_ARCH01.dgn

USERNAME => untitled DATE PLOTTED => 8/12/2016 TIME PLOTTED => 11:13:14 AM

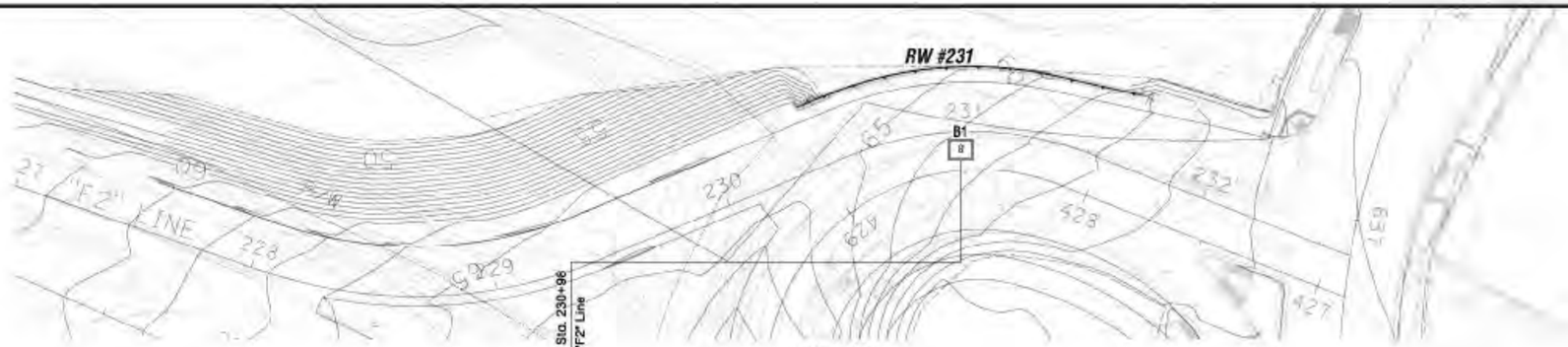

PLAN

1" = 30'

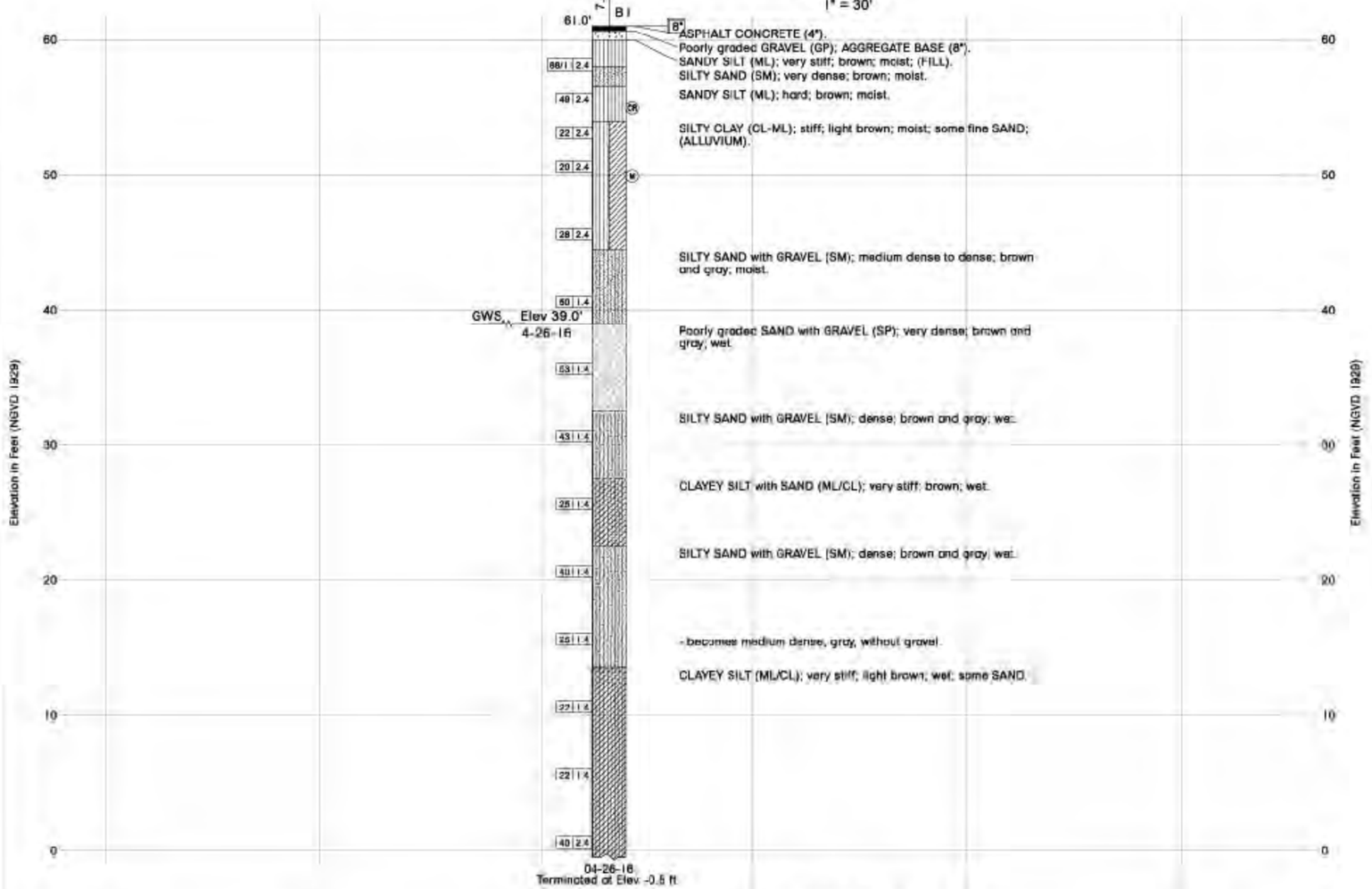

PROFILE

HORIZONTAL SCALE: 1" = 30'
VERTICAL SCALE: 1" = 5'

DIST	COUNTY	ROUTE	POST MILES TOTAL PROJECT	SHEET No.	TOTAL SHEETS
03	SUI			2	5

REGISTERED PROFESSIONAL ENGINEER

PLANS APPROVAL DATE

The State of California or its officers or agents shall not be responsible for the accuracy or completeness of electronic copies of this plan sheet.

GEOCON CONSULTANTS, INC.

Geocon Project No. S9853-05-03

This LOTB sheet was prepared in accordance with the Caltrans Soil & Rock Logging, Classification, and Presentation Manual (2010).

BENCH MARK

DESCRIPTION

Set Berntsen Spike V205 located at N2027792.376 E6896099.564, elevation 1,816.42 feet, NGVD 1929, per sheet SC-1 of undated "Survey Control" 65% plan provided by Dokken Engineering.

NOTES:

1. The consistency/apparent density descriptions are from Figures 2-9 and 2-10 of the Caltrans "Soil and Rock Logging, Classification, and Presentation Manual". These descriptors are based upon the Standard Penetration Test (ASTM D 1586)(uncorrected for Hammer Energy Ratio and the Modified California sampling method (ASTM D 3550). The descriptors based on the Mod Cal method have been modified by the utilization of the Burmister's (1948) input energy correction equation and NAVFAC DM 7.1.

2. Relatively undisturbed soil samples were obtained by driving a 3-inch outside diameter, with a 2.5-inch inside diameter (California Modified) split-spoon sampler for Modified California Sampling Methods and a 2-inch outside diameter split-spoon sampler for Standard Penetration Test Sampling Methods.

3. The boring logs and related information represent the opinion of the professional engineer as to the character of the material at the locations shown. Soil and groundwater conditions between adjacent test holes and at other locations may differ from those shown. Groundwater conditions may change with passage of time.

4. Test boring elevations are approximate based on topographic base sheet mapping prepared for this project.

5. Test boring locations were determined in the field based on staking and pacing from mapped site features. The locations of the explorations should be considered accurate only to the degree implied by the measuring methods used.

6. A downhole 140-pound automatic hammer falling 30 inches was used to drive samplers.

7. Visual classification of earth materials was based on field inspection and was confirmed or revised with laboratory test results.

ENGINEERING SERVICES	GEOTECHNICAL SERVICES	PREPARED FOR THE STATE OF CALIFORNIA DEPARTMENT OF TRANSPORTATION	DIVISION OF ENGINEERING SERVICES STRUCTURE DESIGN DESIGN BRANCH	BRIDGE NO. / POST MILES	RETAINING WALL NO. 231 LOG OF TEST BORINGS
FUNCTIONAL SUPERVISOR / NAME	DRAWN BY: D. HANSEN / CHECKED BY: J. ZORNE	FIELD INVESTIGATION BY: B. PEREZ			

ORIGINAL SCALE IN INCHES FOR REDUCED PLANS 0 1 2 3

CU
EA

DISREGARD PRINTS BEARING EARLIER REVISION DATES

REVISION DATES

SHEET 6 OF 6